PETROLEUM REFINING

A Guide to the Inspection
of Petroleum Refineries
for Compliance with
Air Pollution Regulations

Compliance Assistance Program

California Environmental Protection Agency
Air Resources Board
Stationary Source Division

July 1994

*Disclaimer:

This manual is being provided to give those interested a broad overview of the process. However, regulatory information contained within this manual may be outdated and should not be relied upon for enforcement/permit purposes.

Acknowledgments

We appreciate all the assistance that was given to our effort in developing this manual by those within industry and governmental agencies. A special thank you to the following for their comments and special effort:

Michael Amundson	San Joaquin Unified APCD - Kern County Desert Zone
Louis Bailey	Unocal
Karen Brooks	San Luis Obispo County APCD
W. H. Buckalew	Mobil
Pete Gates	Chevron
Barney Griswold	Bay Area AQMD
Katsumi Keeler	South Coast AQMD
John Knoblock	Chevron
Richard Martin	Callidus Technologies
Darrell Nelson	Bay Area AQMD
Leigh Noda	ARCO
Paul Rodden	Callidus Technologies
Alex Rotenstein	SCAQMD
Bruce Schafer	Marley Cooling Tower Co.
Steven D. Smith	Unocal
Michael Wedl	Bay Area AQMD
Alan Wheeler	Jacobs Engineering

And many other district inspectors and refinery representatives who provided valuable opportunities and information in the field.

Principal Authors
Darrell Hawkins
Eric Patton

Contributing ARB Staff
Nestor Castillo
Errine Gonzales
Gary Hunter
Kathy Mead
Bob Nguyen
Simeon Okoroike
Jon Taylor

Table of Contents

100 INTRODUCTION

101 COMPLIANCE ASSISTANCE PROGRAM ..... 100 - 1
101.1 Maintenance of Manual ..... 100 - 1

102 MANUAL SCOPE AND USE ..... 100 - 1
102.1 Audience ..... 100 - 2
102.2 Organization of the Manual ..... 100 - 2
102.3 Topics Found in Other CAP Manuals ..... 100 - 3
102.4 RECLAIM ..... 100 - 4

103 PETROLEUM REFINING EMISSIONS CATEGORY ..... 100 - 4
103.1 Scope of Category ..... 100 - 5
103.2 Emissions from Refining Operations ..... 100 - 8
103.3 Impact of Emissions on Air Quality ..... 100 - 9

104 CHEMISTRY OF PETROLEUM ..... 100 - 11
104.1 Hydrocarbons ..... 100 - 11
104.2 Boiling Temperatures & Vapor Pressure ..... 100 - 12
104.3 Viscosity ..... 100 - 13
104.4 Hydrocarbon Types ..... 100 - 14
104.4.1 Olefins ..... 100 - 14
104.4.2 Paraffins, Cycloparaffins, and Aromatics ..... 100 - 15
104.5 VOCs (Volatile Organic Compounds) ..... 100 - 15
104.6 Composition of Crude Oil ..... 100 - 16
104.6.1 The Light Gases, Methane and Ethane ..... 100 - 16
104.6.2 Propane ..... 100 - 16
104.6.3 Butane ..... 100 - 17
104.6.4 Gasoline ..... 100 - 17
104.6.5 Kerosene ..... 100 - 18
104.6.6 Diesel ..... 100 - 18
104.6.7 Gas Oil ..... 100 - 19
104.6.8 Fuel Oil ..... 100 - 19
104.6.9 Asphalt ..... 100 - 19
104.6.10 Lube Oils and Waxes ..... 100 - 20

105 GENERAL PROCESS DESCRIPTIONS ..... 100 - 20
105.1 Refining Overview ..... 100 - 22
105.2 Separation ..... 100 - 24
105.2.1 Distillation ..... 100 - 24
105.2.2 Atmospheric and Vacuum Distillations ..... 100 - 26
105.2.3 Steam Stripping ..... 100 - 27
105.2.4 Flashing ..... 100 - 27
105.2.5 Air Pollution Concerns of Distillation ..... 100 - 27
105.3 Treating ..... 100 - 28

105.3.1 Hydrotreating ..... 100 - 28
105.4 Conversion ..... 100 - 29
105.4.1 Catalytic Cracking (also refer to section 203) ..... 100 - 29
105.4.2 Hydrocracking ..... 100 - 30
105.4.3 Catalytic Reforming ..... 100 - 31
105.4.4 Alkylation ..... 100 - 32
105.5 Blending ..... 100 - 32

106 INSPECTOR SAFETY ..... 100 - 33
106.1 Safety Equipment ..... 100 - 33
106.2 Sampling ..... 100 - 35
106.3 Emergency Horn Signals ..... 100 - 35
106.4 Hazards ..... 100 - 36
106.5 Process Unit Safety ..... 100 - 38

201 GAS-FIRED HEATERS

201.1 INTRODUCTION ..... 201 - 1
201.1.1 Uses of Fired Heaters ..... 201 - 3
Boilers ..... 201 - 3
Process Heaters ..... 201 - 3

201.2 PROCESS AND CONTROL ..... 201 - 4
201.2.1 Basic Heater Operation ..... 201 - 4
Fuel-Gas Characteristics ..... 201 - 4
Sulfur Removal ..... 201 - 5
Burners ..... 201 - 5
Natural Draft ..... 201 - 6
Forced Draft and Induced Draft ..... 201 - 7
201.2.2 Nitrogen Oxides (NOx) Control Methods ..... 201 - 7
Flue Gas Recirculation (FGR) ..... 201 - 7
Low-NOx Burners ..... 201 - 7
Selective Catalytic Reduction (SCR) of NOx ..... 201 - 11
Non-Catalytic NOx Reduction ..... 201 - 11
201.2.3 Carbon Monoxide (CO) Control Methods ..... 201 - 11
201.2.4 Waste Gas Burning ..... 201 - 11

201.3 RULE DISCUSSION ..... 201 - 12
201.3.1 Exemptions for Old or Small Heaters ..... 201 - 13
201.3.2 Continuous Emission Monitors (CEMs) ..... 201 - 13
201.3.3 Regulation of Nitrogen Oxide (NOx) Emissions ..... 201 - 14
201.3.4 Regulation of Sulfur Oxides (SOx) Emissions ..... 201 - 16
201.3.5 Regulation of Carbon Monoxide (CO) Emissions ..... 201 - 18
201.3.6 Regulation of Visible Emissions (VE) ..... 201 - 19
201.3.7 District Regulations Limiting Odors ..... 201 - 20

201.4 INSPECTION PROCEDURES ..... 201 - 20
201.4.1 Pre-Inspection Procedures ..... 201 - 21
File Review ..... 201 - 21
Regulation Review ..... 201 - 22
Equipment Check ..... 201 - 25
Pre-Entry and Entry ..... 201 - 25
Pre-Inspection Meeting ..... 201 - 25
201.4.2 Facility Inspection Procedures ..... 201 - 26
Check-in With the Unit Operator ..... 201 - 26
Inspection of NOx Control Equipment ..... 201 - 27
Inspection of Low-NOx Burners ..... 201 - 27
Selective Catalytic Reduction (SCR) of NOx ..... 201 - 28
Selective Non-Catalytic Reduction (SNCR) of NOx ..... 201 - 29
Sulfur Oxide (SOx) Emission Inspection ..... 201 - 29
Visible Emission Inspections ..... 201 - 30
Visible Emissions Certification ..... 201 - 30
201.4.3 Post-Inspection Procedures ..... 201 - 30

202 BLOWDOWN SYSTEMS AND FLARES

202.1 INTRODUCTION ..... 202 - 1

202.2 PROCESS AND CONTROL ..... 202 - 2
202.2.1 Pollutants ..... 202 - 4
202.2.2 Relief Valve Leakage ..... 202 - 5
202.2.3 Smokeless Flares ..... 202 - 5
202.2.4 Purge Gases ..... 202 - 7
202.2.5 Purging for Start-up ..... 202 - 7
202.2.6 Water Seals ..... 202 - 7
202.2.7 Pilot Flame Detectors ..... 202 - 8
202.2.8 Flare Height ..... 202 - 8
202.2.9 Fugitive Emissions ..... 202 - 9

202.3 RULE DISCUSSION ..... 202 - 9
202.3.1 40 CFR 60.18 ..... 202 - 9
202.3.2 California Health and Safety Code ..... 202 - 11
202.3.3 Regulations Limiting Visible Emissions (VE) ..... 202 - 12
202.3.4 District Regulations Limiting Odors ..... 202 - 14
202.3.5 District Regulations Affecting Breakdowns ..... 202 - 14

202.4 INSPECTION PROCEDURES ..... 202 - 15
202.4.1 Pre-Inspection Preparations ..... 202 - 15
File Review ..... 202 - 15
Plan Ahead ..... 202 - 16
Regulation Review ..... 202 - 17
Equipment Check ..... 202 - 17
Pre-Entry and Entry ..... 202 - 18

Pre-Inspection Meeting ..... 202 - 18
202.4.2 Facility Inspection Procedures ..... 202 - 18
Check in with the Unit Operator ..... 202 - 21
Check the Permit to Operate ..... 202 - 21
Blowdown System and Flare Inspection Form ..... 202 - 21
Active Flares ..... 202 - 22
Quiet Flares ..... 202 - 22
Active and Quiet Flares ..... 202 - 22
Visible Emission Inspections ..... 202 - 23
Visible Emissions Certification ..... 202 - 23
202.4.3 Post-Inspection Procedures ..... 202 - 23

203 CATALYTIC CRACKING

203.1 INTRODUCTION ..... 203 - 1

203.2 PROCESS DESCRIPTION ..... 203 - 2
203.2.1 Gas-Oil Feeds to the FCC ..... 203 - 3
203.2.2 Cracking Reaction ..... 203 - 3
203.2.3 Cracked Hydrocarbons from the Reactor ..... 203 - 5
203.2.4 Spent Catalyst Regeneration ..... 203 - 6
203.2.5 Regenerator Off-gas ..... 203 - 7
203.2.6 Regenerator Off-gas Expander Turbine ..... 203 - 8
203.2.7 Regenerator Off-Gas Treatment ..... 203 - 8
203.2.8 Electrostatic Precipitator ..... 203 - 8
Factors Affecting Collection Efficiency ..... 203 - 10
Loading and Unloading Catalyst ..... 203 - 11
203.2.9 CO Boiler ..... 203 - 11
Soot Blowing ..... 203 - 12
203.2.10 Start-up and Shutdown ..... 203 - 12

203.3 RULE DISCUSSION ..... 203 - 13
203.3.1 New Source Performance Standards (NSPS) ..... 203 - 13
203.3.2 California Health and Safety Code ..... 203 - 14
203.3.3 Continuous Emission Monitors ..... 203 - 14
203.3.4 Limits for Visible Emissions and Particulates ..... 203 - 15
Visible Emissions Certification ..... 203 - 16
203.3.5 Emission Limits for Sulfur Oxides (SOx) ..... 203 - 16
203.3.6 Emission Limits for Carbon Monoxide (CO) ..... 203 - 16
203.3.7 Emission Limits for Nitrogen Oxides (NOx) ..... 203 - 21

203.4 INSPECTION PROCEDURES ..... 203 - 21
203.4.1 Pre-Inspection Preparations ..... 203 - 23
File Review ..... 203 - 23
Regulation Review ..... 203 - 23
Pre-Inspection, Left Column ..... 203 - 23
Reactor / Regenerator Constraints ..... 203 - 24

Electrostatic Precipitators ..... 203 - 27
CO Boiler ..... 203 - 27
Equipment Check ..... 203 - 27
Pre-Entry and Entry ..... 203 - 27
Pre-Inspection Meeting ..... 203 - 28
203.4.2 Facility Inspection Procedures ..... 203 - 28
Check-in with the Unit Operator ..... 203 - 28
Visible Emission Inspections ..... 203 - 29
Check the Permit to Operate ..... 203 - 29
Inspection Form ..... 203 - 29
Confidential Data ..... 203 - 30
Reactor / Regenerator ..... 203 - 30
Electrostatic Precipitators ..... 203 - 31
CO Boiler ..... 203 - 31
Continuous Emission Monitor Inspection ..... 203 - 31
203.4.3 Post-Inspection Procedures ..... 203 - 32

204 SULFUR RECOVERY UNITS

204.1 INTRODUCTION ..... 204 - 1

204.2 PROCESS AND CONTROL ..... 204 - 1
204.2.1 Role of the Sulfur Recovery Unit ..... 204 - 1
204.2.2 From Petroleum Sulfur to Hydrogen Sulfide (H_2S) ..... 204 - 2
204.2.3 Fuel-Gas Scrubbing ..... 204 - 2
204.2.4 Sour Water Stripping ..... 204 - 3
204.2.5 Claus Process (Conversion of H_2S to Liquid Sulfur) ..... 204 - 4
204.2.6 Beavon Stretford Tail Gas Cleanup ..... 204 - 4
204.2.7 SCOT Tail Gas Cleanup Process ..... 204 - 7
204.2.7 Wellman-Lord Tail Gas Cleanup Process ..... 204 - 7
204.2.8 Tail Gas Incineration ..... 204 - 7
204.2.9 Odors ..... 204 - 10
204.2.10 Iron Sulfide ..... 204 - 10

204.3 RULE DISCUSSION ..... 204 - 11
204.3.1 New Source Performance Standards (NSPS) ..... 204 - 11
204.3.2 California Health and Safety Code ..... 204 - 12
204.3.3 Exemptions for Older or Small Units ..... 204 - 12
204.3.4 Continuous Emission Monitors ..... 204 - 13
204.3.5 Emission Limits for Sulfur Oxides (SOx) ..... 204 - 14
204.3.6 Emission Limits for Hydrogen Sulfide (H_2S) ..... 204 - 16
204.3.7 District Regulations Limiting Odors ..... 204 - 16
204.3.8 District Regulations Limiting Visible Emissions (VE) ..... 204 - 16
Visible Emissions Certification ..... 204 - 18

204.4 INSPECTION PROCEDURES ..... 204 - 19
204.4.1 Pre-Inspection Preparations ..... 204 - 20

File Review ..... 204 - 20
Do your Homework ..... 204 - 20
Total Sulfur Compound Emissions ..... 204 - 23
Regulation Review ..... 204 - 24
Equipment Check ..... 204 - 24
Pre-Entry and Entry ..... 204 - 24
Pre-Inspection Meeting ..... 204 - 25
204.4.2 Facility Inspection Procedures ..... 204 - 25
Check-in with the Unit Operator ..... 204 - 25
Check the Permit to Operate ..... 204 - 26
Sulfur Recovery Unit Inspection Form ..... 204 - 26
Continuous Emission Monitor Inspection ..... 204 - 27
Visible Emission Inspections ..... 204 - 27
204.4.3 Post-Inspection Procedures ..... 204 - 27

301 FUGITIVE EMISSIONS

301.1 INTRODUCTION ..... 301 - 1

301.2 VALVES ..... 301 - 1
301.2.1 The Parts of a Valve ..... 301 - 1
301.2.2 Types of Valves ..... 301 - 2
301.2.3 Valve Leak Sources ..... 301 - 4

301.3 PRESSURE RELIEF DEVICES ..... 301 - 8

301.4 FLANGES AND OTHER PIPING CONNECTIONS ..... 301 - 8

301.5 PUMPS AND COMPRESSORS ..... 301 - 10
301.5.1 Shaft Seals Using Packing ..... 301 - 10
301.5.2 Mechanical Shaft Seals ..... 301 - 12
301.5.3 Compressors ..... 301 - 14

301.6 OTHER EQUIPMENT ..... 301 - 14

301.7 RULE DISCUSSION ..... 301 - 16
301.7.1 Leakage Limits ..... 301 - 16
301.7.2 Self-Inspection Requirements ..... 301 - 17
301.7.3 Leak Repair ..... 301 - 17
301.7.4 Component Identification Requirements ..... 301 - 18
301.7.5 Recordkeeping and Reporting ..... 301 - 18
301.7.6 Federal (NSPS) Regulations ..... 301 - 18
301.7.7 Exemptions ..... 301 - 34

301.8 PRE-INSPECTION PROCEDURES ..... 301 - 34
301.8.1 File Review ..... 301 - 34
301.8.2 Regulation Review ..... 301 - 35
301.8.3 Equipment Check ..... 301 - 35
301.8.4 Pre-entry and Entry ..... 301 - 35
301.8.5 Pre-inspection Meeting ..... 301 - 36

301.9 INSPECTION ..... 301 - 36
301.9.1 Leak Detection Methods ..... 301 - 37
301.9.2 Hydrocarbon Analyzer Use ..... 301 - 38
301.9.3 Inspection of Components ..... 301 - 39
Inspecting Valves ..... 301 - 40
Inspecting Flanges ..... 301 - 40
Inspecting Pumps and Compressors ..... 301 - 41
Inspecting Pressure Relief Devices ..... 301 - 41
Other Equipment ..... 301 - 42
301.9.4 Recordkeeping ..... 301 - 42

301.10 POST-INSPECTION PROCEDURES ..... 301 - 43

302 STORAGE TANKS

302.1 INTRODUCTION ..... 302 - 1

302.2 OPERATION OF PETROLEUM STORAGE TANKS ..... 302 - 2
302.2.1 Fill, Suction, and Swing line ..... 302 - 4
302.2.2 Manual Gauging of Tank Contents ..... 302 - 4
302.2.3 Automatic Gauging ..... 302 - 6
302.2.4 Sampling System ..... 302 - 7
302.2.5 Fire Suppression ..... 302 - 7

302.3 FIXED ROOF TANKS ..... 302 - 8
302.3.1 Fixed Roof Tank Breathing Cycle ..... 302 - 9
302.3.2 Fixed Roof Tank Vapor Recovery ..... 302 - 9
302.3.3 Gas Blanketing ..... 302 - 11

302.4 FLOATING ROOF TANKS ..... 302 - 13
302.4.1 Floating Roof Tank Seals ..... 302 - 14
Primary Seal ..... 302 - 15
Secondary Seal ..... 302 - 17
302.4.2 Sample Hatches ..... 302 - 18
302.4.3 Drains ..... 302 - 19
302.4.4 Roof Legs ..... 302 - 20
302.4.5 Vents and Vacuum Breaker Leg ..... 302 - 20
302.4.6 Floating Roof Pontoons ..... 302 - 21

302.5 CONSERVATION TANKS ..... 302 - 22

302.6 PRESSURE TANKS ..... 302 - 23

302.7 RULE DISCUSSION ..... 302 - 23
302.7.1 Exemptions ..... 302 - 24

302.8 INSPECTOR SAFETY AND CONFINED SPACES ..... 302 - 43
302.8.1 Permit and Non-permit Confined Spaces ..... 302 - 44
302.8.2 Floating Roof Tanks ..... 302 - 44

302.8.3 Additional Safety Considerations ..... 302 - 46

302.9 PRE-INSPECTION PROCEDURES ..... 302 - 47
302.9.1 File Review ..... 302 - 47
302.9.2 Regulation Review ..... 302 - 47
302.9.3 Equipment Check ..... 302 - 47
302.9.4 Pre-entry and Entry ..... 302 - 48
302.9.5 Pre-inspection Meeting ..... 302 - 48

302.10 INSPECTION OF FIXED ROOF TANKS ..... 302 - 48
302.10.1 Inspecting Fixed Roof Tanks Without Vapor Recovery ..... 302 - 49
302.10.2 Inspecting Fixed Roof Tanks With Vapor Recovery ..... 302 - 50

302.11 INSPECTING FLOATING ROOF TANKS ..... 302 - 55
302.11.1 External Floating Roof Tank Inspection ..... 302 - 56
Entering the Roof ..... 302 - 56
Checking Secondary and Primary Seals ..... 302 - 59
Gapping Tools ..... 302 - 60
Secondary Seal Inspection ..... 302 - 61
Primary Seal Inspection ..... 302 - 61
Closure Criteria of Roof Components ..... 302 - 62
Checking Tank Legs ..... 302 - 62
Inspection of Breather Valves and Vents ..... 302 - 62
Inspection of Drains, Inlets, and Outlets ..... 302 - 63
302.11.2 Internal Floating Roof Tank Inspection ..... 302 - 63

302.12 FLOATING ROOF TANK PROBLEMS AND FAILURES ..... 302 - 64

302.13 TANK SAMPLING ..... 302 - 65

302.14 POST-INSPECTION PROCEDURES ..... 302 - 68

302.15 STORAGE TANK DEGASSING AND CLEANING ..... 302 - 69
302.15.1 Fixed Roof Tank Cleaning ..... 302 - 69
302.15.2 Floating Roof Tank Cleaning ..... 302 - 70
302.15.3 Storage Tank Degassing Rules ..... 302 - 70
302.15.4 Verification of Compliance with Degassing Rules ..... 302 - 72

303 WASTEWATER TREATMENT

303.1 INTRODUCTION ..... 303 - 1

303.2 WASTEWATER SOURCES ..... 303 - 1

303.3 PROCESS DESCRIPTION ..... 303 - 3
303.3.1 Process Drains and Process Sewers ..... 303 - 3
303.3.2 Junction Boxes ..... 303 - 5
303.3.3 API and CPI Separators ..... 303 - 5
303.3.4 Dissolved Air Flotation Units (D.A.F.) ..... 303 - 9
303.3.5 Trickling Filters ..... 303 - 9

303.3.6 Biotreaters ..... 303 - 11
303.3.7 Coagulation-Sedimentation ..... 303 - 12

303.4 FINAL TREATMENT PROCESSES ..... 303 - 12
303.4.1 Oxidation Ponds and Aerated Lagoons ..... 303 - 12
303.4.2 Chlorination ..... 303 - 13
303.4.3 Membrane Treatment ..... 303 - 13
303.4.4 Filtration ..... 303 - 13

303.5 WASTEWATER TREATMENT VAPOR RECOVERY ..... 303 - 14

303.6 WASTEWATER TREATMENT SLUDGE ..... 303 - 15

303.7 RULE DISCUSSION ..... 303 - 15
303.7.1 Exemptions ..... 303 - 16

303.8 PRE-INSPECTION PROCEDURES ..... 303 - 27
303.8.1 File Review ..... 303 - 27
303.8.2 Regulation Review ..... 303 - 28
303.8.3 Equipment Check ..... 303 - 28
303.8.4 Pre-entry and Entry ..... 303 - 28
303.8.5 Pre-inspection Meeting ..... 303 - 31

303.9 WASTEWATER TREATMENT INSPECTION ..... 303 - 31
303.9.1 Junction Boxes ..... 303 - 31
303.9.2 Trash Racks ..... 303 - 32
303.9.3 Oil/Water, API and CPI Separators ..... 303 - 32
303.9.4 Dissolved Air Flotation (D.A.F.) Units ..... 303 - 33
303.9.5 Biotreaters ..... 303 - 33

303.10 POST-INSPECTION PROCEDURES ..... 303 - 34

304 COOLING TOWERS

304.1 INTRODUCTION ..... 304 - 1

304.2 PROCESS DESCRIPTION ..... 304 - 3
304.2.1 Heat Exchangers ..... 304 - 3
Why Do They Leak? ..... 304 - 4
304.2.2 Cooling Towers ..... 304 - 5
Good Operating Order ..... 304 - 6
Hydrocarbon Analyzers ..... 304 - 7
304.2.3 Reducing VOC Emissions ..... 304 - 7
304.2.4 Hexavalent Chrome ..... 304 - 7

304.3 RULE DISCUSSION ..... 304 - 7
304.3.1 Hexavalent Chrome ..... 304 - 8
304.3.2 Hydrocarbon Emissions ..... 304 - 8
304.3.3 Odors ..... 304 - 10

304.4 INSPECTION PROCEDURES ..... 304 - 10
304.4.1 Pre-Inspection ..... 304 - 10
Regulation Review ..... 304 - 11
Equipment Check ..... 304 - 11
304.4.2 Facility Inspection Procedures ..... 304 - 11
Detection of Hydrocarbons in Cooling Water ..... 304 - 11
Hexavalent Chrome ..... 304 - 13
Check the Permit to Operate ..... 304 - 13
Housekeeping and Maintenance ..... 304 - 13
304.4.3 Post-Inspection Procedures ..... 304 - 13

305 VACUUM SYSTEMS

305.1 INTRODUCTION ..... 305 - 1

305.2 PROCESS DESCRIPTION ..... 305 - 2
305.2.1 Vacuum Distillation Column ..... 305 - 2
305.2.2 The Vacuum ..... 305 - 2
305.2.3 Ejectors and Condensers ..... 305 - 4
305.2.4 Condensate Accumulator ..... 305 - 5

305.3 RULE DISCUSSION ..... 305 - 5

305.4 INSPECTION PROCEDURES ..... 305 - 7
305.4.1 Pre-Inspection ..... 305 - 7
305.4.2 Facility Inspection Procedures ..... 305 - 8
Examine the Noncondensable Vapor Path ..... 305 - 8
Condensate Accumulator Cover ..... 305 - 9
Check the Permit to Operate ..... 305 - 9
305.4.3 POST-INSPECTION PROCEDURES ..... 305 - 10

APPENDICES

A. Your Local District Regulations A-1
B. EPA Method 21 ..... B-1
C. References C-1

GLOSSARY

INDEX

LIST OF FIGURES

104.1 Major Hydrocarbon Types 100-13
105.1 Typical Petroleum Refinery Process Units 100-21
201.1 Conventional Gas-Fired Heater 201-2
201.2 Gas Pre-mix Burner 201-6
201.3 Modern Low-NOx Burner 201.8
201.4 Low-NOx Burner 201-8
201.5 Low-NOx Burner 201-9
201.6 Gas-Fired Heater with Retrofit SCR System 201-10
201.7 Gas-Fired Heater Inspection Form 201-23
202.1 Blowdown System with Gas Recovery 202-3
202.2 Flare Tip and Molecular Seal 202-6
202.3 Blowdown System and Flare Inspection Form 202-19
203.1 Fluidized Catalytic Cracking Unit 203-4
203.2 Fluidized Catalytic Cracking Unit Inspection Form 203-25
204.1 Claus Sulfur Recovery Unit 204-5
204.2 Beavon Tail Gas Clean-up Process 204-6
204.3 SCOT Tail Gas Clean-Up Process 204-8
202.4 Wellman-Lord Tail Gas Clean-Up Process 204-9
204.5 Sulfur Recovery Unit Inspection Form 204-21
301.1 Valve Types and Mechanisms 301-3
301.2 Parts of a Globe Valve 301.2
301.3 Flow Check Valves 301-6
301.4 Potential Leak Areas for Gate Valves and Plug Valves 301-7
301.5 Bolted Flange 301-9
301.6 Centrifugal Pump 301-10
301.7 Packed Seal 301-11
301.8 Mechanical Seals 301-13
301.9 Labyrinth Compressor Seal 301-15
302.1 Swing Line System on Fixed Roof Petroleum Storage Tank 302-5
302.2 Fixed Roof Tanks with Vapor Recovery 302-8
302.3 Vapor Recovery Unit 302-10
302.4 External Floating Roof Tank with Pontoon 302-12
302.5 Double Deck Floating Roof Tank 302-13
302.6 Internal Floating Roof Tank 302-15
302.7 Metallic Shoe Seal 302-16
302.8 Resilient-Toroid-Type Seal 302-17
302.9 Lifter Roof Tank 302-21
302.10 Vapor Conservation Tanks 302-22
302.11 Pressure Tank Designs 302-25
302.12 Inspection Checklist for Fixed Roof Tanks 302-51
302.13 Inspection Checklist for Floating Roof Tanks 302-57
302.14 Tank Sample Locations 302-67
303.1 Crude Desalter 303-2

LIST OF FIGURES (CONTINUED)

303.2 Main Wastewater Treatment Flows 303-4
303.3 API Separator 303-6
303.4 CPI Separator 303-8
303.5 Dissolved Air Flotation Unit 303-10
304.1 Simplified Cooling Tower 304-2
304.2 Heat Exchanger (Simplified) 304-5
305.1 Vacuum Distillation Unit 305-3

LIST OF TABLES

103.1 SCAQMD Refinery Emissions 100-6
103.2 Refinery Emissions and SCAQMD Totals 100-7
103.3 Refinery Emissions and BAAQMD Totals 100-7
201.1 District Regulations Limiting NOx Emissions 201-15
201.2 Regulations Limiting SOx Emissions 201-17
201.3 District Regulations Limiting CO Emissions 201-18
201.4 District Regulations Limiting Particulates and VE 201-19
201.5 District Regulations Limiting Odors 201-20
202.1 District Regulations Limiting VE 202-12
202.2 BAAQMD Regulations Limiting Odors 202-13
202.3 Other District Regulations Affecting Flares 202-14
203.1 Fluidized Catalytic Cracking Unit Emissions 203-1
203.2 Federal New Source Performance Standards Limiting PM Emissions 203-17
203.3 District Regulations Limiting PM Emissions 203-18
203.4 Federal New Source Performance Standards Limiting SOx Emissions 203-19
203.5 District Regulations Limiting SOx Emissions 203-20
203.6 Federal New Source Performance Standards Limiting CO Emissions 203-20
203.7 District Regulations Limiting CO Emissions 203-21
203.8 District Regulations Limiting NOx Emissions 203-22
204.1 Federal Regulations Limiting SOx Emissions 204-14
204.2 District Regulations Limiting SOx Emissions 204-15
204.3 Regulations Limiting H_2S Emissions 204-17
204.4 District Regulations Limiting Odors 204-18
204.5 District Regulations Limiting VE 204-19
301.1A Federal Leakage Limits 301-19
301.1B BAAQMD Leakage Limits 301-20
301.1C SCAQMD Leakage Limits 301-21
301.1D SJVUAPCD Leakage Limits 301-21
301.1E SLOCAPCD Leakage Limits 301-22
301.2A Federal Inspection Requirements 301-22
301.2B BAAQMD Inspection Requirements 301-23
301.2C SCAQMD Inspection Requirements 301-23
301.2D SJVUAPCD Inspection Requirements 301-24
301.2E SLOCAPCD Inspection Requirements 301-24
301.3A Federal Leak Repair Requirements 301-25
301.3B BAAQMD Leak Repair Requirements 301-26
301.3C SCAQMD Leak Repair Requirements 301-27
301.3D SJVUAPCD Leak Repair Requirements 301-28
301.3E SLOCAPCD Leak Repair Requirements 301-29
301.4A BAAQMD Identification Requirements 301-29
301.4B SCAQMD Component Identification Requirements 301-30
301.4C SLOCAPCD Component Identification Requirements 301-30

LIST OF TABLES (CONTINUED)

301.5A Federal Recordkeeping Requirements 301-31
301.5B BAAQMD Recordkeeping and Reporting Requirements 301-32
301.5C SCAQMD Recordkeeping and Reporting Requirements 301-32
301.5D SJVUAPCD Recordkeeping Requirements 301-33
301.5E SLOCAPCD Recordkeeping and Reporting Requirements 301-33
302.1A EPA Vapor Control Equipment Requirements 302-26
302.1B BAAQMD Vapor Control Equipment Requirements 302-26
302.1C SCAQMD Vapor Control Equipment Requirements 302-27
302.1D SJVUAPCD Vapor Control Equipment Requirements 302-28
302.1E SLOCAPCD Vapor Control Equipment Requirements 302-29
302.2 Fixed Roof Tank Requirements 302-30
302.3A EPA Internal Floating Roof Tank Requirements 302-31
302.3B EPA External Floating Roof Tank Requirements 302-32
302.3C EPA Primary and Secondary Seal Requirements and Vent Requirements 302-33
302.4A BAAQMD Internal and External Floating Roof Tank Requirements 302-34
302.4B BAAQMD Primary Seal Requirements 302-35
302.4C BAAQMD Secondary Seal and Vent Requirements 302-36
302.5A SCAQMD Internal and External Floating Roof Tank Requirements 302-37
302.5B SCAQMD Primary Seal Requirements 302-38
302.5C SCAQMD Secondary Seal and Vent Requirements 302-39
302.6A SJVUAPCD Internal and External Floating Roof Tank Requirements 302-40
302.6B SJVUAPCD Primary Seal Requirements 302-41
302.6C SJVUAPCD Secondary Seal and Vent Requirements 302-42
302.7 SLOCAPCD Internal and External Floating Roof Tank Requirements 302-43
302.8 Storage Temperatures Versus Actual Vapor Pressure 302-53
303.1 Process Drain Requirements 303-17
303.2 Sewer Line Requirements 303-18
303.3 Junction Box Requirements 303-19
303.4 API/CPI Separator Forebay Requirements 303-20
303.5A EPA API/CPI Separator Requirements 303-20
303.5B BAAQMD API/CPI Separator Requirements 303-21
303.5C SCAQMD API/CPI Separator Requirements 303-22
303.5D SJVUAPCD API/CPI Separator Requirements 303-23
303.5E SLOCAPCD API/CPI Separator Requirements 303-23
303.6 Gauging and Sampling Devices 303-24
303.7 DAF/DNF/IAF Requirements 303-25
303.8 Slop Oil Vessel Requirements 303-26
303.9 Sludge Dewatering Unit Requirements 303-27
303.10 Wastewater Treatment Inspection Form A 303-29
303.11 Wastewater Treatment Inspection Form B 303-30
304.1 VOC Emissions From Cooling Towers 304-1
304.2 District Regulations Affecting Cooling Towers 304-9
305.1 District Regulations Affecting Vacuum Systems 305-6

100 INTRODUCTION

101 COMPLIANCE ASSISTANCE PROGRAM

The Compliance Assistance Program (CAP) is an effort by the **California Air Resources Board** (CARB) to provide assistance to local districts in conducting more comprehensive, consistent, and accurate compliance inspections. The CAP program also provides information to industry to help them comply with air pollution regulations. The goal of this effort is to reduce emissions by promoting greater awareness of the rules and by encouraging cooperation between regulators and industry.

The program produces inspection manuals, self-inspection handbooks, and other publications for district inspectors and for industry. This petroleum refining inspection manual is designed to provide rule specific inspection procedures and reference materials in a readable and understandable format. The manual is intended to encourage complete compliance inspections and comprehensive compliance determinations.

101.1 MAINTENANCE OF MANUAL

The **Compliance Assistance Program (CAP)** welcomes your comments concerning this manual. Your comments and corrections, changes in legal requirements, and new information on equipment and processes will be collected and periodically distributed in an upgrade packet. Only the manual users who return the tracking card located in the very front of the manual will receive an upgrade packet, so be sure to fill out your card and send it in as soon as you receive the manual.

102 MANUAL SCOPE AND USE

Petroleum refineries are large, complex facilities which would require a team of qualified inspectors and several weeks for a comprehensive inspection. However, most air pollution control districts assign one inspector to a given refinery and it is his or her responsibility to inspect the facility piece by piece throughout the year, making sure that all of the quarterly and yearly inspection quotas for the refinery are met. This manual is designed to help the individual inspector to inspect a refinery,

one unit at a time. Consequently, the manual is divided into discrete sections, each of which addresses a specific type of inspection for a specific type of equipment or unit.

102.1 AUDIENCE

The manual was written primarily for district inspectors and environmental managers, but it may also be useful to other government agencies and industry personnel. It can be used as a reference manual or user's guide and it is designed for easy referencing, reading, and updating. It also contains graphics and illustrations to enhance understanding.

102.2 ORGANIZATION OF THE MANUAL

This manual describes the inspection of the major sources of air pollution emissions in a refinery. The emission sources have been grouped into two types. Section 200 of the manual discusses equipment whose emissions are primarily the **products of combustion**, such as nitrogen oxides (NOx), sulfur oxides (SOx), carbon monoxide (CO), and particulates. This printing of the manual includes gas-fired heaters (section 201), flares (202), catalytic cracking units (203), and sulfur recovery plants (204) in section 200. Section 300 discusses equipment whose emissions are primarily light hydrocarbons (also called volatile organic compounds or **VOCs**). This printing of the manual includes fugitive emissions from valves, flanges, pumps, and compressors (section 301); storage tanks (302); wastewater treating units (303), cooling towers (304), and vacuum systems (305) in section 300. A process description, rule discussion, and inspection procedures are discussed for each of the facilities.

You may notice that the list of topics does not include some common types of process units, such as crude distillation units, reformers or hydrocrackers. The emission sources found in many of these units are remarkably similar, and it is not necessary to address each unit individually. Most units have two primary types of emission sources: gas-fired heaters and fugitive VOC emissions. Inspection procedures for both fired heaters and fugitive emissions are discussed thoroughly in this

manual and are applicable throughout the refinery. Short process descriptions for many types of process units are included later in this introduction (section 105).

As an example, a gasoline reformer usually generates emissions from the two most common sources. First, the gas-fired heaters are sources of NOx and SOx emissions. Second, leaks from valves, pumps, and compressors may be the sources of fugitive VOC emissions. The inspection of gas-fired heaters is discussed thoroughly in section 201 of this manual, and inspection for fugitive hydrocarbon leaks is discussed thoroughly in section 301. The description of a gasoline reformer, however, is given only one or two paragraphs here in the introduction. Comprehensive descriptions of most refining processes are readily available in other publications, and are quite lengthy. They would not contribute greatly to the mission of this manual and, consequently, have not been included here.

Fluidized catalytic crackers (FCCs) on the other hand, produce a distinct type of emission from the regenerator off-gas, and they have related pollution control equipment. For this reason, inspection of the regenerator off-gas system of the FCC is discussed in detail in a dedicated section of this manual (section 203). A complete survey of the FCC would also include inspections of the fired heaters and fugitive emissions sources.

A glossary, which contains important terms used in the manual, and appendices, which contain supplemental information, are included. An index at the end of the manual provides easy access to information.

102.3 TOPICS FOUND IN OTHER CAP MANUALS

CARB has already produced manuals and handbooks which cover electrostatic precipitators, bulk terminals, cargo tank loading and unloading, internal combustion engines, fuel specifications, drilling and petroleum production, and solvents use. Although petroleum refineries do contain these types of equipment, these topics are not repeated in this manual. These manuals and handbooks are available from the Air Resources Board, Compliance Assistance Program, (916) 327-7211.

102.4 RECLAIM

The inspection procedures suggested in this manual are primarily based on the conventional command-and-control approach to air pollution enforcement. In this approach, specific pieces of polluting equipment are regulated by requiring pollution control equipment, limiting emissions, and limiting certain operating parameters.

As this manual is being written, the South Coast Air Quality Management District (SCAQMD) is actively developing the Regional Clean Air Incentives Market (RECLAIM). RECLAIM will allow firms to maintain facility compliance for sulfur oxide (SOx) and nitrogen oxide (NOx) emissions, rather than compliance by each emission point. Under the RECLAIM program, emissions from each permit unit could vary, so long as total emissions from the facility during the compliance period did not exceed the emissions cap (that is, the maximum level) established for the facility. At this time, emissions of particulates, hydrocarbons, and carbon monoxide will continue to be controlled using the command-and-control methods but these pollutants may be included in RECLAIM at a later date.

The RECLAIM system will rely heavily on continuous emission monitoring systems and on the keeping and maintenance of good records. But adequate enforcement cannot be accomplished by merely looking at records or at a computer terminal. The inspector must periodically visit the plant and verify that pollution control devices and monitors are in proper operation, and that all operating sources are included in the reporting system.

The procedures presented in this manual will continue to apply to these on-site inspections of emission sources, even those regulated by RECLAIM. In many cases, however, the conditions which warrant issuing a Notice of Violation (NOV) may be different under RECLAIM. The enforcement of prohibitory rules such as those for visible emissions and odors will continue unchanged.

100 INTRODUCTION

103 PETROLEUM REFINING EMISSIONS CATEGORY

Petroleum refining involves a vast array of equipment and processes for changing crude oil into useful petroleum products. The emissions from the equipment used to make these products make up the petroleum refining emissions category.

Most of the processes require heat from the combustion of fuel gas. This combustion produces large amounts of NOx, and significant amounts of SOx, CO, and particulates. Fluidized catalytic crackers and fluidized cokers also produce large amounts of these pollutants. Hydrocarbon leaks from refining equipment (commonly called fugitive emissions) result in large amounts of volatile organic compounds (VOCs) being emitted to the atmosphere. The majority of these fugitive emissions are from valves, pumps, and compressors. Other significant sources of VOC emissions include storage tanks and wastewater treatment facilities.

103.1 SCOPE OF CATEGORY

The scope of this manual includes common refinery equipment that produces emissions of air pollutants. The following is a list of the highest priority point sources included in this manual. These sources have been regulated to minimize emissions but are often still responsible for most of the pollutant emissions.

- Fired heaters
- Flares
- Catalytic cracking
- Sulfur recovery
- Fugitive emissions (Valves, flanges, pumps, compressors, etc.)
- Storage tanks
- Wastewater treatment
- Cooling towers
- Vacuum systems

Several other topics are being considered for inclusion in a later edition of this manual. Fluidized cokers can be significant emissions sources but were not included at this time because there are only three currently in operation in California. Vapor recovery for marine loading has been

Table 103.1
SCAQMD Refinery Emissions
CARB 1989 Emission Inventory

Source Description	Tons Per Year of Pollutant				
	ROG	NOx	SOx	CO	PM
Fired heaters	388	11157	980	2392	1565
Catalytic cracking		1282	2865		609
Flares		12	5		3
Sulfur recovery units			6		
Wastewater treatment	934				
Fugitive emissions	4924	0	0	0	0
Storage tanks	1525				
Relief valves	361				
Cooling towers	394				1
Cogeneration	30	151	69	35	223
Stationary I. C. engines	213	1861	24	1531	30
Cargo tank loading	68				
Vacuum distillation	25	8	23	66	3
Other operations	622	647	1534	678	774
Totals	9483	15118	5505	4702	3208

Abbreviations used in Tables 103.1, 103.2, and 103.3:

ROG = Reactive Organic Gas, similar to VOC = Volatile Organic Compound
NOx = Nitrogen Oxides
SOx = Sulfur Oxides
CO = Carbon Monoxides
PM = Particulate Matter
I.C. = Internal Combustion

Table 103.2
Refinery Emissions and SCAQMD Totals
CARB 1989 Emission Inventory

Source Description	Tons Per Year of Pollutant				
	ROG	NOx	SOx	CO	PM
Refinery fuel combustion	600	13500	1100	4000	1800
Process, storage and transfer	8800	1700	4000	1100	1400
SCAQMD Refining Total	9400	15200	5100	5100	3200
SCAQMD Total	438000	402000	44000	1752000	767000
Percentage due to Refining	2.1%	3.8%	11.6%	0.3%	0.4%

Table 103.3
Refinery Emissions and BAAQMD Totals
CARB 1989 Emission Inventory

Source Description	Tons Per Year of Pollutant				
	ROG	NOx	SOx	CO	PM
Refinery fuel combustion	180	13900	2600	1900	730
Process, storage and transfer	10950	4000	14200	1300	1200
BAAQMD Refining Total	11130	17900	16800	3200	1930
BAAQMD Total	288000	212000	40000	949000	365000
Percentage due to Refining	3.9%	8.4%	42%	0.3%	0.5%

required very recently in the San Francisco Bay Area, and the subject is evolving rapidly at this time, too rapidly for inclusion here. We would appreciate any suggestions you may have regarding topics to include in a second printing.

103.2 EMISSIONS FROM REFINING OPERATIONS

Refineries emit a large variety of pollutants. These include nitrogen oxides (NO or NO_2, also commonly written as NOx), sulfur oxides (SO_2 or SOx), carbon monoxide (CO), particulate matter (PM), and volatile organic hydrocarbons (VOC). In the air basins where refineries are located, the refineries are responsible for an average of about eight percent of the NOx emissions and about 25 percent of the SOx emissions. Their contributions to CO and particulate emissions are less than one percent. Odorous chemicals, such as hydrogen sulfide (H_2S), are also common emissions. Tables 103.1, 103.2, and 103.3 list quantities of these emissions based on the 1989 CARB emissions inventory (the most recent numbers available). These tables are representative of most air districts but only the South Coast Air Quality Management District (SCAQMD) and the Bay Area Air Quality Management District (BAAQMD) are specifically listed. The refinery emissions in San Joaquin Valley Unified Air Pollution Control District (SJVUAPCD) and San Luis Obispo County Air Pollution Control District (SLOCAPCD) have similar proportions but in smaller quantities since they have fewer refineries.

Nitrogen oxides, sulfur oxides, carbon monoxide, and particulates are pollutants that come primarily from combustion processes. Refineries use combustion equipment, such as fired heaters, extensively to heat petroleum. The **nitrogen oxides (NOx)** are formed during the combustion of fuel with air at high temperatures. NOx is a well known **precursor** to the formation of **ozone** in the atmosphere and air basins with elevated ozone levels must generally reduce NOx emissions to reduce the ozone levels.

Sulfur oxides (SOx) come from burning fuel that contains sulfur. Sulfur is a common element in the Earth's crust and it is found in most fossil fuels, such as coal or oil, in varying amounts. Sulfur in fuels is undesirable in two ways. First, burning the fuel will cause SOx emissions to the atmosphere. Second, sulfur in fuels such as gasoline can deactivate

the exhaust catalysts in vehicles. This could result in increased emissions of NOx, hydrocarbons, and carbon monoxide (CO) from the vehicles. Most of the fuel burned in refineries comes from the crude oil and it will usually contain some sulfur.

Carbon monoxide, (CO) comes from incomplete combustion - combustion with too much fuel and too little air. During incomplete combustion, carbon monoxide forms instead of carbon dioxide (CO_2). Carbon monoxide robs the body of oxygen, and high ambient levels are known to cause fatigue and chest pain in those with chronic heart problems.

Gaseous or liquid hydrocarbons leak from valves, flanges and other refinery equipment. Hydrocarbons that are reactive, called **volatile organic compounds (VOCs) or reactive organic gases (ROGs)** are of greatest concern. VOCs are also well known precursors to the formation of ozone in the atmosphere. Air basins with elevated ozone levels must also reduce VOC emissions to reduce the ozone levels.

103.3 IMPACT OF EMISSIONS ON AIR QUALITY

Although refineries are only one of many sources of air pollution, the emissions from refineries do adversely affect air quality:

Nitrogen oxides form a reddish-brown haze that can be seen on the horizon. They can damage the cells lining the respiratory tract and increase susceptibility to infection. The irritating gas can constrict the airways of asthmatics. Nitrogen oxides can also damage the cells of plants.

Hydrocarbons and nitrogen oxides may react with air, triggered by the energy of sunlight, to form ozone in the lower atmosphere. Ozone is considered one of California's worst air pollution problems. Ozone damages the surfaces of cars and buildings, the lungs of people, and crops. Between $150 million to $1 billion are lost from crop damage from air pollution in California.

Sulfur dioxide can be a source of odor problems from refineries. Inhaling sulfur dioxide produces symptoms such as shortness of breath in people with asthma. People with emphysema and chronic bronchitis also are adversely affected by exposure to sulfur dioxide. Research sponsored by CARB has shown that even moderate exercise greatly increases the sensitivity of asthmatics to sulfur dioxide. Children exposed to sulfur dioxide experience increased respiratory tract infections. Healthy people also may experience sore throats, coughing and breathing difficulties when exposed to high levels.

Carbon monoxide (CO) binds to hemoglobin, the oxygen-carrying protein in blood, reducing the amount of oxygen which reaches the heart, brain, and other body tissues. Exposure to CO particularly endangers people with coronary artery disease, whose hearts already receive limited supplies of blood and oxygen. Even healthy people who are exposed to low levels of CO can experience headaches, fatigue and slow reflexes from lack of oxygen.

Particulate matter can directly irritate the respiratory tract, constrict airways, and interfere with the mucous lining of the air ways. The portion of the airborne particulates (condensed organic compounds, primary particles, nitrates, and sulfates) which are 2.5 microns and smaller are of greatest concern. This size fraction is especially harmful to the lungs. The majority of toxic or carcinogenic metals, the majority of acidic components, and the largest fraction of mutagenic particles, including polycyclic aromatic hydrocarbons, are also found in this fine size fraction of particulate matter.

Ambient nitrates, formed in the atmosphere from oxides of nitrogen, are one of the most prevalent particulate pollutants in the South Coast Air Basin. During episodes in the summer, nitrates alone can exceed California's 24-hour particulate matter standard. Health effects associated with nitrates include: aggravation of cardiovascular illnesses, irritation of the respiratory tract, increase in asthmatic attacks, and an increase in respiratory illness.

Sulfate particles, formed in the atmosphere from oxides of sulfur or directly emitted from combustion sources using sulfur containing fuels, aggravate respiratory diseases and can increase asthmatic symptoms such as wheezing, chest pains and shortness of breath.

Sulfur and nitrogen oxides also contribute to acidic air pollution. Acidic air pollution occurs as acid rain, acid fog, and as acid vapors and particles. Acid air pollution can damage materials and affects the ability of the lung to cleanse itself.

104 CHEMISTRY OF PETROLEUM

A complete discussion of the chemistry of petroleum is not within the scope of this manual. Instead, we will focus on the terms which an air quality inspector must be familiar with in order to understand basic refinery operations and the corresponding regulations.

104.1 HYDROCARBONS

Petroleum (crude oil) is a mixture of a large group of substances called hydrocarbons. They are called hydrocarbons because their molecules are made up of two types of atoms, hydrogen and carbon. The simplest of these hydrocarbons is methane, which contains one carbon atom and four hydrogen atoms: the empirical formula is CH_4. Methane is a colorless and odorless gas and is the primary component of natural gas.

The next simplest hydrocarbon is ethane, with two carbon atoms and six hydrogen atoms, C_2H_6. This is followed by propane (C_3H_8) and butane, (C_4H_{10}). These are also colorless gases at ambient conditions (at room temperature and at atmospheric pressure).

Hydrocarbons with five or more carbon atoms are generally liquids or solids at ambient conditions. These begin with pentane (C_5H_{12}) and continue to hydrocarbons with over 40 carbon atoms which are found in paraffin wax and tar. Most of us cannot remember the names of hydrocarbons with more than four carbon atoms nor can we figure out how many hydrogen atoms they should have. Fortunately, the oil industry has developed a shorthand method of representing these compounds.

In this shorthand, only the number of carbon atoms is shown. For example, propane would be C3 and octane would be C8. This shorthand is commonly used in flow diagrams to represent intermediate product streams. A mixture of pentane and hexane is often represented as **C5C6** (pronounced see five see six).

104.2 BOILING TEMPERATURES & VAPOR PRESSURE

Generally, as the number of carbon atoms in a molecule increases (that is, as the **molecular weight** increases), the temperature at which it boils also increases. As we noted, methane, ethane, propane, and butane, are gases at ambient conditions. Consequently, we know that the boiling temperatures of these hydrocarbons are less than 60 °F.

Directly related to the boiling temperature is the concept of vapor pressure. The molecules in every liquid are in rapid motion and have some tendency to jump from the liquid to the vapor phase. This tendency can be measured by placing the liquid in a closed container and measuring the pressure it produces. If this vapor pressure is above atmospheric pressure (14.7 **psia**, pounds per square inch absolute) for example, the liquid would boil if the container were opened. If the vapor pressure were below 14.7 psia, the fluid would remain a liquid but would tend to evaporate.

Vapor pressure is extremely important to the air quality inspector because it is a measure of the tendency for a liquid to evaporate. And evaporation of petroleum products is the primary cause of VOC emissions to the atmosphere. The most common measurement used is the **Reid vapor pressure** (RVP). **RVP** is determined using standardized methods and is measured when the liquid is at 100 °F. The current RVP limit for summertime gasoline in California is 7.8 psia.

As you know, warm liquids tend to evaporate faster than cool ones. It follows that a liquid has a higher vapor pressure when it is warm than when it is cool. This is why there are often temperature limits placed on the petroleum products which are stored in tanks. True vapor pressure (TVP) is measured at the actual temperature of the liquid in the tank. The federal New Source Performance Standard for TVP for hydrocarbons stored in a floating roof tank is 11 psia maximum.

Generally, as the number of carbon atoms in a molecule increases (that is, as the molecular weight increases), the temperature at which it boils also increases. Also, as the molecular weight increases, the vapor pressure decreases. And it follows that as the boiling point increases, the vapor

Figure 104.1
Major Hydrocarbon Types

Type	Example	Example Structure
Paraffin	Normal-hexane	C-C-C-C-C-C
Iso-paraffin (Isomer)	Iso-hexane	C-C(-C)-C-C-C
Olefin	Hexene	C=C-C-C-C-C
Cycloparaffin (Naphthene)	Cyclohexane	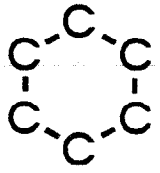
Aromatic	Benzene	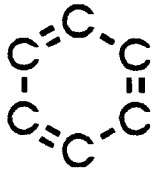

pressure decreases. These are generalities and there are other factors which can cause exceptions to these rules of thumb, but for the most part they are reliable.

104.3 VISCOSITY

Some liquids, such as fuel oils and tars, are thick and do not flow readily. Others such as gasoline are thin and watery and flow easily. The technical term describing thick and thin is viscosity. The heavy thick oils are known as viscous or as having high viscosity. These oils are difficult to pump and often must be heated or diluted (cut) before being transferred by pipeline. Viscous oils are also less likely to leak to the atmosphere through small cracks or pores in the equipment.

The light thin oils are known to be less viscous or as having low viscosity. These oils are easy to transfer by pipeline. Low viscosity oils are also more likely to leak to the atmosphere through small cracks or pores in the equipment. Liquids with the lowest viscosities are liquid propane, butane, and gasoline. Raising the temperature of a liquid will lower its viscosity, and so hot gasoline, for example, may be more likely to leak from a tiny opening than cold gasoline. Also, hydrocarbons with a low viscosity tend to have a higher vapor pressure and a low molecular weight.

Gases such as ethane or propane are much less viscous still. Consequently, extensive efforts are required from a plant operator in order to minimize leakage of gases from pumps and valves, etc.

104.4 HYDROCARBON TYPES

Another factor which causes variations in the properties of hydrocarbons is the type of atomic bond between two carbon atoms in a molecule. The two types we are most concerned with are the single bond and the double bond. Although the physics of the bonds are beyond the scope of this manual, we can discuss their properties. Figure 104.1 includes the structural formulae for the major hydrocarbon types.

104.4.1 Olefins

The double carbon-carbon bond is relatively unstable. The double bond is an active site on the molecule where another molecule or atom could come and attach itself. Hydrocarbons with a double carbon-carbon bond are called olefins. The olefin butene (a four carbon molecule with one double bond) is a primary input to the alkylation unit where it reacts with other small molecules to form larger, gasoline sized, molecules.

Because olefins are so reactive, they react very easily to form ozone in the atmosphere. For this reason, the olefin content of gasoline has been limited by regulation for many years.

104.4.2 Paraffins, Cycloparaffins, and Aromatics

The single carbon-carbon bond is the most stable. A molecule with all single bonds is called a **paraffin**. This type of molecule is also known as saturated because all of its reactive bond sites are occupied by hydrogen atoms. Sometimes the carbon atoms in a paraffinic molecule form a straight chain. Sometimes they form branched chains and are called **isomers**: Isohexane is shown in Figure 104.1 as an example.

If the carbon atoms in a paraffinic molecule form a ring, the molecule is called a **cycloparaffin** or a **naphthene**. Some six-carbon ring structures have bonds which are often represented as a mixture of single and double bonds. These molecules are called **aromatics**. The simplest and most common of these is benzene which comprises about 1 percent of gasoline. Unfortunately, benzene is also a known carcinogen. The typical composition of **gasoline** is 5 to 9 percent olefins, 30 to 40 percent aromatics, and 55 to 62 percent paraffins.

104.5 VOCs (VOLATILE ORGANIC COMPOUNDS)

Within this manual, the term VOC will be used to include all volatile hydrocarbons which are reactive precursors to the formation of ozone. This essentially includes all hydrocarbons found in a refinery except methane, which is not considered reactive, and except the heavier oils (kerosene, diesel, gas oil, etc.), which have a vapor pressure less than 0.1 mm mercury and are not considered volatile.

Two terms, VOC and ROG (reactive organic gas), have overlapping definitions and often cause confusion. The EPA definition of VOC excludes ethane because the EPA does not consider it a reactive ozone precursor. However, CARB does consider ethane to be reactive and so the term ROG was coined. ROG essentially includes ethane and the EPA defined VOCs. Nevertheless, since VOC is a more universally recognized term, it has been used and redefined in many California air district regulations to include ethane. Isn't this confusing?

The term VOC will be used throughout this manual and is intended to include ethane. VOC is more recognizable and we believe that its use will not interrupt the reader's flow, as would the lesser known terms such as ROG.

104.6 COMPOSITION OF CRUDE OIL

The composition of crude oil may best be thought of in terms of the refined products we are all familiar with.

104.6.1 The Light Gases, Methane and Ethane

The light gases, methane (CH_4) and ethane (C_2H_6), can be generated during the distillation or the cracking processes (to be discussed later). These are the main components of natural gas and within the refinery, they are generally burned as fuel gas. They are also used as feed in the production of hydrogen and may be used as blanket gas in fixed roof storage tanks.

In California, ethane is considered a reactive precursor to ozone formation. Methane does not contribute significantly to the formation of ozone and consequently, methane emissions are of less environmental concern. Due to the presence of ethane in the fuel gas mixture, fugitive leaks of fuel gas must be minimized.

104.6.2 Propane

Propane (C_3H_8) can be marketed as liquefied petroleum gas (LPG) or can also be burned within the refinery with the fuel gas. Propane is a reactive VOC which has a very low viscosity. Pumps, compressors, and valves which handle the product are prone to leakage (fugitive emissions). They must be checked and maintained regularly to prevent significant VOC emissions.

104.6.3 Butane

Butane is a VOC with a normal boiling point of about 30 °F. Consequently, it is generally stored as a liquid in pressurized containers, often large spheres or horizontal cylindrical vessels ("bullets") within the refinery. In large, modern butane storage facilities, the butane is often refrigerated, using the stored butane as the refrigerant. In this manner the butane can be stored in liquid form at atmospheric pressure and a pressure vessel is not required. These systems often include a dedicated flare (see section 202) to incinerate the butane in the event of overpressure. Butane has a very low viscosity and pumps, compressors, and valves which handle the product are prone to leakage. They must be checked and maintained regularly to prevent significant VOC emissions.

104.6.4 Gasoline

Gasoline has a boiling point range from about 100 °F to 430 °F. Raw unrefined gasoline is also called **naphtha**. Finished California gasoline has an RVP from below 7.8 psia in the summer up to 13.5 psia in the winter. The vapors from gasoline are all within the definition of a VOC. Much of the VOCs which enter our atmosphere and are responsible for the formation of ozone come from gasoline, in one way or another. Pumps and valves in gasoline service are candidates for leaks of significant VOC emissions (fugitive emissions).

Gasoline is quite volatile and gives off flammable vapors which can form an explosive mixture when mixed with air. During normal storage, in a container with some air, the gasoline vapors will saturate the air to form a mixture which is too rich to burn (has insufficient oxygen and is above the upper explosive limit, UEL). However, care must be taken when storing and transferring the product. Due to its volatility, refinery storage tanks which contain gasoline have special requirements which are discussed in section 302 of this manual. In general, floating roof tanks must have special secondary seals to contain the vapors and fixed roof tanks must have a vapor recovery system.

104.6.5 Kerosene

The next heavier product is kerosene. Kerosene can also be called **diesel #1**, **heating oil #1**, or **Jet A** fuel (with additives), depending on the intended end use of the product. Jet propulsion fuels **JP-4** and **JP-5** are also highly refined kerosene products. It's boiling point range is from about 400 °F to 530 °F and it has an RVP of less than 0.5 psia. For safety reasons, it does not contain any light hydrocarbons which could produce an explosive vapor mixture under normal conditions. If stored in a closed container, the vapors will not form an explosive mixture; the mixture will be too lean to burn (insufficient fuel vapors or below the lower explosive limit, LEL). It is blended to a specification known as flash point, which assures that very few vapors are given off.

Since kerosene is not volatile, tanks and piping components which contain kerosene are exempt from some air quality regulations. For example, fugitive emissions rules do not apply to pumps, compressors, valves, or flanges which contain only kerosene. Also, floating roof tanks containing kerosene normally have primary seals but are exempt from rules requiring primary and secondary seals and vapor recovery. Please note that the product in this equipment must be tested for volatility before these exemptions apply. There have been cases where JP-4 and JP-5, stored in very hot climates, have reached temperatures where the true vapor pressure is above 0.5 psia, and secondary roof seals were required. If the inspector is in doubt, a sample should be taken and tested for RVP and the tank temperature should be recorded.

104.6.6 Diesel

Common diesel fuel (technically called **diesel #2** or **heating oil #2**) has a boiling point range of about 530 °F to 660 °F and an RVP below 0.5 psia. It has a typical odor. For safety reasons, it also is blended to a flash point specification which assures that few vapors are given off . If stored in a container, the vapors will not form an explosive mixture; the mixture will be too lean to burn. With respect to air quality considerations, diesel is similar to kerosene and the rule exemptions noted for kerosene will also apply for diesel.

104.6.7 Gas Oil

There is a significant portion of crude oil known as gas oil, which has a boiling point temperature range located above diesel. Gas oil is normally not a finished product and may contain high levels of sulfur compounds. Most refineries try to convert the gas oil into gasoline using a cracking process, to be discussed later. Gas oil can also be blended directly to fuel oil. The two most common types are **atmospheric gas oil** and **vacuum gas oil**. These have slightly different properties but are very similar with respect to an air pollution inspector's concerns. Gas oils have a very low volatility and in general, the air pollution controls which apply to diesel will also apply to gas oil.

104.6.8 Fuel Oil

The next heavier petroleum products may be the fuel oils, thick and black, but normally a liquid at room temperature with a boiling temperature range from 750 °F to over 1000 °F. Fuel oils are commonly burned by electric utility power plants and by ocean going ships. If the crude oil source is sour (has a high sulfur concentration) then the fuel oil will probably also have a high sulfur concentration. Low sulfur fuel oil (LSFO) can be burned in many California electric utility plants and has a sulfur content less than 0.5 percent.

104.6.9 Asphalt

The "heaviest" of these products is perhaps asphalt or tar. These are thick black substances, perhaps solid at room temperature, which are normally dissolved in the liquid portions of the crude. This is the most dense portion of the crude (it may sink in water where oil would normally float) and it has the highest boiling temperature (over 1000 °F). Hot tar has a characteristic odor that we are familiar with from road maintenance. The chemical composites which make up most of the tar are called asphaltenes. The molecules have many branches and rings joined together. Asphalts must usually be heated before being transferred through piping and it is often stored in heated tanks. If the temperature gets too high, blue smoke (visible emissions) may be seen coming from the storage tank, loading rack, etc.

104.6.10 Lube Oils and Waxes

Lube oils and waxes can be discussed next. These are sometimes grouped together because they have similar boiling temperature ranges (from 650 °F to 1000 °F) and are separated from the crude together and purified together. They are normally separated from each other later by cooling until the wax crystallizes and then filtering the wax from the oil. Chemically, the components of oil and wax are known as paraffinic (as in paraffin wax). Paraffinic usually refers to straight chain hydrocarbon compounds which are saturated with hydrogen. The lube oil portion is normally further separated by distillation. The lighter, lower boiling point fraction of the lube oil has a lower viscosity and the heavier, higher boiling point fraction has a higher viscosity. These fractions are later blended together along with additives to produce finished lube oils with the desired viscosity characteristics. Lube oils and waxes are recovered only from crude oils which contain high quality lube components. Lube components from lesser quality crudes are usually not recovered and are left in the gas oil and fuel oil fractions.

105 GENERAL PROCESS DESCRIPTIONS

Petroleum refining involves changing crude oil into useful products. There are many processes used to make petroleum based products and it is not possible to cover all of them in this manual. The processes at a refinery can basically be divided into separation, treating, conversion, and blending. These processes will be briefly described in this section.

Crude oil is made of thousands of chemical compounds, mostly hydrocarbon compounds with small amounts of sulfur, nitrogen, oxygen, and various metals. Crude oils from different oil fields in the world differ widely, containing varying amounts of different hydrocarbons, sulfur, and other compounds. Some crudes are light and have a low viscosity and others may be heavy and thick. The colors may be black, green, or even bronze.

Most refineries must be designed to process only one or a few different types of crude. For example, to process heavy crudes, plenty of cracking capacity (as described later) may be required to convert the crude into

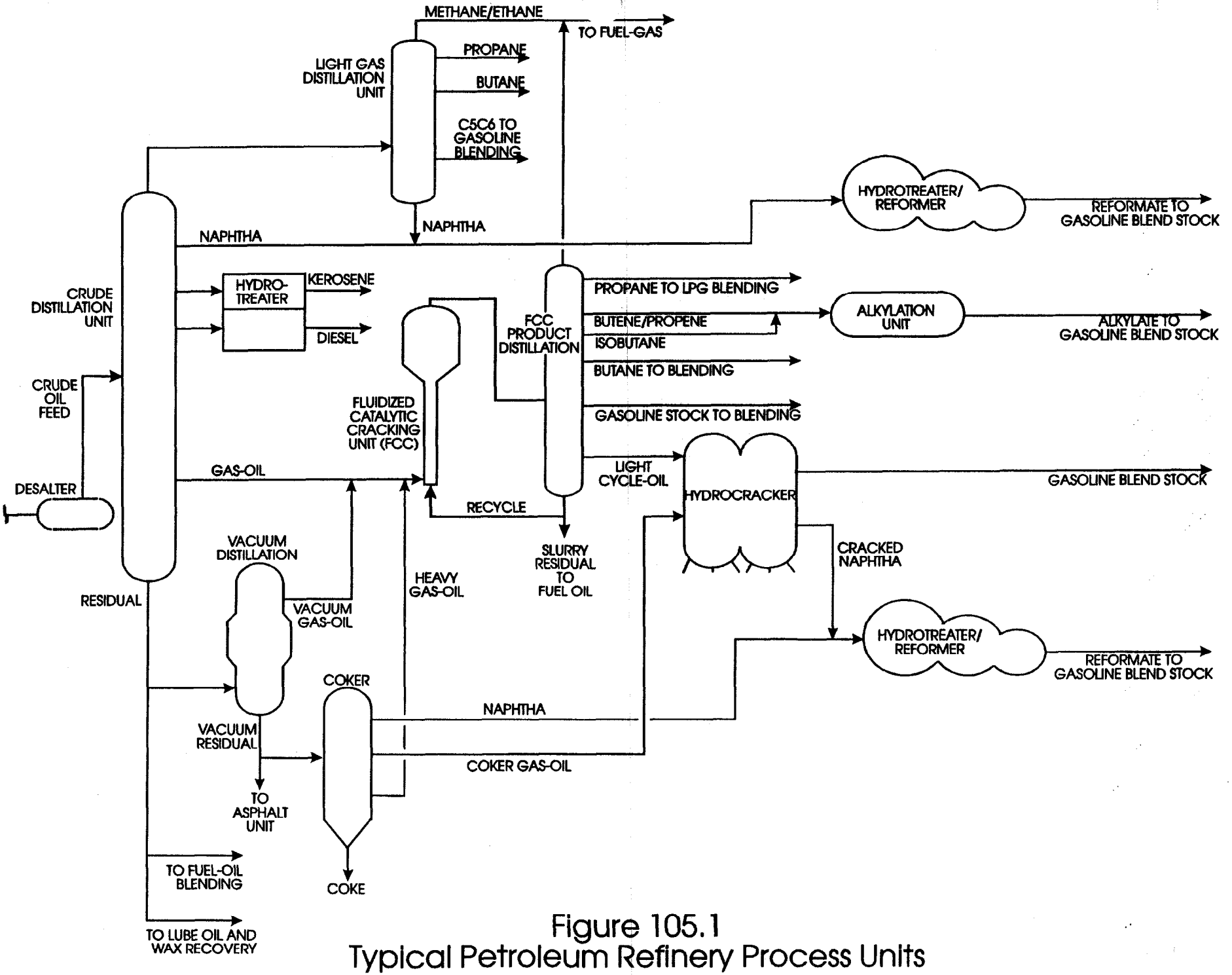

Figure 105.1
Typical Petroleum Refinery Process Units

lighter oils. To process sour crudes (with high sulfur content), special corrosion resistant materials must be used and adequate sulfur removal facilities are required. Paraffinic crudes may need lube oil processing facilities.

105.1 REFINING OVERVIEW

Crude oil normally enters the refinery either by pipeline or it is pumped from tanker ships. It is then stored in large tanks prior to processing. The various crude types are kept in separate tankage and tested for quality. This allows the process units to plan for variations in production based on the characteristics of the crude. Other intermediate products, such as gas oil or petroleum distillate from other refineries, may also be received. Again these are stored in segregated tankage before being fed to the appropriate process unit.

Figure 105.1 shows the main steps involved in petroleum refining. Crude oil is first fed to the crude distillation unit (section 105.2). As it enters the unit, the crude is heated and mixed with water, usually water that is recycled from elsewhere. The water is used to dissolve any salts contained in the crude. The oil/water mixture is then allowed to settle and separate in a large vessel called the **desalter** and the water phase brine is drained off. Two-stage desalters are also common. The crude oil is then boiled and separated into fractions based on boiling temperatures. These fractions normally include light gases, naphtha, kerosene, diesel, gas-oil, and residual. Please note that the names for these fractions vary somewhat from refinery to refinery.

The **light gases** from the crude distillation are sent to a gas plant where they are further distilled and combined with light gases from other units. **Methane** and **ethane** are separated, scrubbed (section 201.2.1) to remove hydrogen sulfide, and sent to the fuel gas system. **Propane** and **butane** are separated and sent to their respective storage systems. Pentane and hexane (**C5C6**) are often used for gasoline blending. Heavier **naphtha** components are often sent to a gasoline reformer (section 105.4.3) to improve antiknock properties.

Naphtha from the crude unit is essentially gasoline which may have some poor product qualities such as low octane and/or high sulfur content. It is usually sent to a gasoline hydrotreater (section 105.3.1) and reformer (section 105.4.3) to improve these qualities. **Kerosene** and **diesel** from the crude distillation are usually hydrotreated to remove sulfur compounds and to saturate some aromatics into cycloparaffins and are then blended to finished products.

Straight-run **gas oil** can be blended to fuel oil, but it becomes more valuable if it is converted to gasoline. This is often achieved using the fluidized catalytic cracking unit, FCC (section 203). Products from the FCC include light gases, propane, propene, butane, butene, isobutane, gasoline stock, light gas oil, and a residual slurry. Propene, butene, and isobutane are sent to the alkylation unit (section 105.4.4) where they combine to form alkylate, an excellent high-octane gasoline blend stock. FCC gasoline is also often a good blend stock but may be washed with caustic to remove sulfur compounds and odors. FCC light gas oil (called light cycle oil) is often sent to a hydrocracker (section 105.4.2) in another attempt to convert it to gasoline. The residual slurry contains entrained catalyst fines and is usually blended to fuel oil.

From the bottom of the crude distillation tower, comes the unboiled portion (called the **residual**) which contains the heavy tar, asphalt, and gas-oil. If the crude is of the paraffinic type, the residual will contain lube oil stocks and waxes. The most common practice is to send the residual to a vacuum distillation unit (section 105.2.2) which recovers as much of the remaining gas-oil (called vacuum gas-oil) as possible for later conversion to gasoline. If the residual is paraffinic, it may be sent to a solvent extraction process to separate the lube oil and wax materials from the asphaltic components. The residual may also be blended straight to fuel oil.

In addition to gas-oil, the vacuum distillation unit produces a residual stream (vacuum resid). Vacuum resid can be blended to asphalt or it may be sent to another conversion unit known as the coker. The coker heats the resid to extremely high temperatures until it decomposes into lighter oils. The coker can produce light gases, naphtha, gas-oil, and solid carbon (coke). The naphtha is often sent to a reforming unit to improve

its gasoline properties. The coker gas-oil is sent to a conversion unit, such as a hydrocracker, to produce more gasoline. Coke is marketed for use in industries such as steel production.

105.2 SEPARATION

The most common type of separation in refining is distillation, where an oil mixture is separated into fractions by boiling and condensing. Variations of the distillation process include steam stripping and flashing. Another type of separation is solvent extraction, most often used to recover paraffinic lube oil and wax components. These processes will be discussed in this section.

105.2.1 Distillation

It is not possible to discuss oil refining until we have an understanding of the **distillation** process and the terms used to describe it. Distillation is the more scientific term for separating crude oil into its components by boiling. Boiling oil was the first process used in petroleum refining and it is still the most common. Other common terms for distillation include **fractional distillation** and **fractionation**. Many of the technical terms used here are repeated in the glossary for reference.

If, for example, a container of a medium crude oil is heated it will start boiling at a temperature around 150 °F. If the temperature is held at that temperature it would eventually stop boiling. At this point, the vapors which have been boiled off would consist mainly of a mixture of light gases: methane, ethane, propane, butane, and pentane. If these vapors are cooled to, say 80 °F, some of the vapors (mainly the pentane) will condense to a liquid.

If the remaining vapors are compressed to about 50 psig (pounds per square inch gauge), and again cooled to 80 °F, the butane portion of the vapor mixture would condense to a liquid. We would now have separated from the crude: 1) pentane - which could be added to gasoline, 2) butane - which could be added to gasoline or sold as a finished

product, and 3) light gases which could be burned within the refinery as fuel gas. Each of these three portions would normally be referred to as a fraction of the distillation.

If the liquid is heated to 430 °F, it will boil again and then stop. If the vapors from this fraction of the distillation are again cooled to 80 °F, the vapors would condense to a liquid. This liquid is raw gasoline (also called naphtha). This product is also sometimes called straight-run gasoline because it comes straight from the crude distillation.

The components of this gasoline begin to boil at about 150 °F and continue to 450 °F. In technical terms, this fraction of the distillation is said to have a **boiling range** of from 150 °F to 430 °F.

Repeating the process, we can raise the temperature to 530 °F. The remaining crude will boil and then stop and the vapors which are generated can be cooled and condensed. This condensed liquid is raw kerosene and it would have a boiling range of from 430 °F to 530 °F.

Again, if the temperature is raised to 660 °F, the crude would boil for a time and stop. If the vapors are cooled and condensed, the liquid condensate would be raw diesel fuel (also called **light gas oil**) with a boiling range of 530 °F to 660 °F.

Raising the temperature again to 1000 °F, more vapors can be generated and condensed. The condensate from this step would be heavy gas oil. This is an example of performing a distillation. It is the method refineries use to initially separate crude oil into products.

At this point, what is left of the original crude is a black tar residue. If the temperature is raised further, the residue will begin to smoke as it begins to decompose. This tar residue is made up of very large hydrocarbon molecules which tend to break apart into smaller molecules at these high temperatures. This process is called thermal cracking. These smaller molecules, which would be a mixture of the products we have already discussed, would then vaporize and can be condensed to liquid as described before.

105.2.2 Atmospheric and Vacuum Distillations

When refineries distill crude oil, it is normally heated to about 750 °F in a furnace. The heated oil then enters an atmospheric distillation tower, so named because the pressure inside is slightly above atmospheric or between about zero and 25 psig. A distillation tower is a tall, cylindrical, tower with many trays inside spaced an equal distance apart. The vapor of the crude oil rises up the tower and cools as it rises. Fractions that have lower boiling points (also lower molecular weights) will condense on the trays near the top of the tower, since these trays are at a lower temperature. Heavier products with higher boiling points (also higher molecular weight) will condense on trays lower in the tower. The condensed fractions can be drawn off from the trays and cooled. Sometimes these **sidestreams**, as they are called, are cooled and returned to the tower to promote condensation. Cool liquid which is returned to the trays of the tower is known as **reflux**.

Light gases such as butane may not condense on any trays and be piped off the top of the distillation tower to a separate **condenser** (cooler). This stream from the top of the tower is known as the **overhead** stream.

Liquid from the bottom (called the **bottoms**, botts, or residual) of the distillation tower is heated and sent to the vacuum distillation tower for further separation. The **vacuum distillation** tower has a much lower pressure inside. This low pressure enables heavy hydrocarbons to boil at lower temperatures. These lower temperatures are desirable because they do not cause decomposition of the oils and the formation of coke (carbon) sludges which may clog up the equipment.

Distillation is also commonly used to separate the products from nearly every process unit throughout the refinery. This assures the quality of the various product streams by removing unwanted components. For example, gasoline blend stocks should contain very little butane. This allows flexibility in the blending process when producing low vapor pressure gasoline. Distillation is the process used to remove butane and lighter gases from gasoline blend stocks.

105.2.3 Steam Stripping

Steam stripping (also called stripping) is a common variation of the distillation process. Water vapor lowers the boiling temperatures of hydrocarbons and allows improved distillation using less heat. When steam is injected into a distillation tower, it also provides heat for boiling. Steam stripping is also used to remove hydrogen sulfide (H_2S) and ammonia (NH_3) from sour water or from spent amine solutions (used in fuel-gas scrubbers or other H_2S absorbers).

105.2.4 Flashing

Flashing is another simple variation of distillation. A hot fluid at high pressure is released into a lower pressure vessel called a flash drum. The more volatile components of the fluid vaporize and exit from the top of the vessel. The heavier components remain liquid and flow from the bottom.

105.2.5 Air Pollution Concerns of Distillation

In almost all cases, distillation involves light VOC type hydrocarbons at elevated temperatures and pressures. Sometimes, these VOCs are found in only the overhead or upper sidestreams to and from the tower. And sometimes VOCs are found in all the upper, middle, and bottom streams. In either case, the pumps, compressors, valves, and motor valves which contain these hot VOC materials are prone to leaks and fugitive emissions. Refining personnel face a difficult challenge in keeping these systems leak free. The air quality inspector must determine if they are meeting that challenge.

Vacuum distillation has special requirements which, in the past, produced significant VOC emissions. The vacuum for this process is achieved using a series of steam ejectors (similar to aspirators) with condensers. There is a vapor stream of noncondensables and VOCs from the final condenser which, in the past, was vented directly to the atmosphere. Regulations now require that these vapors be recovered or vented to an incineration system (flare). These regulations also require that the vacuum system condensate be contained and drained to a covered process water system. Most refineries have long since complied with these requirements, but the

air quality inspector should confirm that proper facilities have been installed and are in use. Inspections of vacuum distillation systems are discussed in section 305.

105.3 TREATING

Treating or purification processes are used to remove contaminants such as sulfur, metal compounds, and nitrogen from petroleum feedstocks. These impurities can adversely affect catalysts, final products and refinery equipment. Many treating processes can be used to remove contaminants, but hydrotreating is now one of the most common.

Other treating processes include: acid (H_2SO_4) and caustic (NaOH) washes, filtration, and absorption. Caustic washes are especially good for removing mercaptans (hydrocarbons with sulfur attached, such as methyl mercaptan, CH_3-S-H). Other than the potential for fugitive VOC emissions and odors, these processes may have limited air pollution potential. Use proper safety precautions, such as rubber gloves and goggles, when near equipment which contains acid or caustic.

105.3.1 Hydrotreating

Hydrotreating is most often used to remove sulfur, nitrogen and metals from the feedstreams to other units. These impurities can deactivate the precious metal catalysts used in hydrocracking and reforming. More recently, hydrotreating is being used to remove sulfur from diesel fuel and catalytic cracker feeds. A more severe variation of hydrotreating is now used to reduce the **aromatic** content of diesel.

During the hydrotreating process, petroleum is mixed with hydrogen and heated to 500-800 °F. The petroleum and the hydrogen are then pumped or "charged" into a reaction vessel filled with a catalyst in pellet form. In the vessel, hydrogen combines with sulfur to form hydrogen sulfide (H_2S), nitrogen compounds are converted to ammonia (NH_3), metals are deposited on the catalyst, double-bonded hydrocarbon atoms (olefins, aromatics and naphthenes) are saturated with hydrogen atoms and converted to single bonded paraffins. Some hydrocarbons may break or "crack" into more valuable, lighter hydrocarbons.

In the interest of the air quality inspector, hydrotreaters will have fired heaters and VOC materials at high temperatures and pressures. Fugitive emissions may be likely. Please note that due to the high hydrogen content, the hydrogen compressor and related equipment may be exempt from the fugitive emissions regulations. Hydrogen leaks pose a special danger because they usually autoignite and burn with an invisible flame.

105.4 CONVERSION

Conversion processes are used to increase the quantity and quality of the products in a refinery. Unlike separation processes, which separated fractions by their boiling points or molecular weights, conversion processes change the chemical structure of hydrocarbons. Most crude oils contain a relatively small amount of gasoline. Gasoline is the most valuable product from crude oil and it is the one of highest demand. Conversion processes can be used to increase the gasoline yield to over 40% of a barrel of crude.

There are many conversion processes that can be used in a refinery. Some of the major ones include: catalytic cracking, hydrocracking, catalytic reforming, alkylation, isomerization, and coking.

105.4.1 Catalytic Cracking (also refer to section 203)

For the catalytic cracking process, heavy gas oil from the crude distillation unit and/or hydrotreated gas oil is heated to about 900 °F and mixed with a catalyst. The catalyst can be in the form of small sand-like particles or beads. The feed enters the reaction chamber where chains of hydrocarbon molecules are broken up into smaller ones. For example, a molecule of Cetane ($C_{16}H_{34}$) may first break into octane (C_8H_{18}), hexane (C_6H_{14}) and ethylene (C_2H_4). The cracked product is then separated from the catalyst by cyclones located in the top of the reactor vessel. It then leaves the reaction chamber and is sent to a distillation tower where catalytically cracked gas (butane and lighter), gasoline, light gas oil and heavy gas oil are separated. Heavy oil from the bottom of the distillation tower (also called heavy cycle oil or slurry oil) may be recycled back to the reactor or blended to fuel oil.

Since hydrocarbons are broken up during the cracking process, carbon atoms of the broken molecules need to bond to another atom. There are not enough hydrogen atoms to saturate all the carbon atoms in the hydrocarbon molecules, so coke, a form of carbon, forms on the surface of the catalyst. This coke deactivates the catalyst and the spent catalyst must be regenerated by removing the coke.

After the catalyst leaves the reaction chamber, it enters the regenerator. In the regenerator, air is mixed with the spent catalyst and the coke is burned off. The hot regenerated catalyst is then mixed with the gas oil feed in the reaction chamber riser and the cycle is repeated.

Nitrogen oxides (NOx) and sulfur oxides (SOx) are the primary pollutants produced in the regenerator off-gas. Also, small fragments of the catalyst particles (called catalyst fines) are carried over with the off-gas. Formerly, large amounts of carbon monoxide (CO) were also produced in the regenerator and then burned in a steam generating heater, called the CO boiler. But recently most facilities have switched to newer catalysts which allow complete combustion in the regenerator and little CO is formed. The CO boiler is generally still in use however. The CO boiler recovers heat from the off-gas and the burning of fuel-gas provides additional heat.

Electrostatic precipitators (ESPs) are used to remove the catalyst fine particulate matter and can be located either upstream or downstream of the CO boiler. Scrubbers to remove SOx and catalyst beds or additives to reduce NOx may also be required. Pollution control for the regenerator off-gas is covered in more detail in section 203 of this manual. The product distillation section of the catalytic cracking unit is quite large and contains many reactive VOC materials, such as olefins. Fugitive emissions from the distillation section will be another significant concern for the air quality inspector.

105.4.2 Hydrocracking

Hydrocracking is catalytic cracking in the presence of hydrogen. It is a process that is used to increase the yield of quality gasoline components. Gas oil feeds are heated to 550 - 750 ^{o}F and pressurized to 1200-2000

psi before being charged into the first stage reactor vessel with hydrogen gas. The feed passes over a fixed bed of catalyst pellets and 40 to 50% of the feed is cracked into gasoline range hydrocarbons.

The hydrogen in the process helps saturate carbon atoms with hydrogen atoms, preventing the formation of olefins and the formation of coke on the catalyst. The cracked products are cooled, liquefied, and run through a hydrogen separator. Hydrogen is recycled back into the reactor with the gas oil feed.

Liquid from the hydrogen separator is pumped to a distillation tower where the different hydrocarbon fractions are separated. Heavier hydrocarbons from the bottom of the tower are usually sent to a second stage reactor where the feed is again heated, pressurized, mixed with hydrogen, put into the reaction chamber, and cracked.

Of interest to the air quality inspector, hydrocrackers will have fired heaters and will contain VOC materials at high temperatures and pressures. Fugitive emissions may be likely. Please note that due to the high hydrogen content, the hydrogen compressor and related equipment may be exempt from the fugitive emissions regulations.

105.4.3 Catalytic Reforming

Catalytic reforming is a means of increasing the octane number of gasoline. It is a reaction where paraffins are converted to isoparaffins (branched) and naphthenes (cyclic or rings). Naphthenes are then also converted to aromatics. A series of three reactors are usually used for the process and catalysts made of alumina, silica and platinum make the complicated reactions work.

Naphtha is fed into the series of reactors which are kept at 900-975 °F and 200-500 psi. After the last reactor, the product is put through a cooler and liquefied. It is then run through a hydrogen separator and later a stabilizer, which removes butane and lighter gases. Reformate is the desired product of the process and is a high quality gasoline blend stock.

The air quality inspector will note that the reforming process requires large fired heaters which produce combustion product emissions. The equipment also contains light gases at high temperatures and pressures and could be the source of fugitive VOC emissions. Catalytic reformers may also contain compressors which are exempt from the fugitive emissions rules due to the high hydrogen content of the gases.

105.4.4 Alkylation

Alkylation was a process developed to help increase the yield of gasoline at the expense of light, less valuable hydrocarbons that were created from catalytic cracking. For example, **isobutane** and **butylene** could combine to form isooctane during an alkylation process. Catalysts consisting of sulfuric acid (H_2SO_4) or hydrofluoric acid (HF) are used to make the reaction work more efficiently.

During the process, olefins (propylene and/or butylene) are mixed with isobutane and cooled in a chiller. The acid catalyst is mixed with the feed mixture and put into the reactor for fifteen to twenty minutes. Since the reaction is somewhat slow, several reactors may be used. An acid separator is then used to remove the acid catalyst from the mixture and the acid is recycled to the reactor. Small amounts of acid may be entrained in the hydrocarbon mixture and this is neutralized by caustic soda. The product is then distilled to separate propane, isobutane, normal butane and alkylate. Isobutane fractionated from the final product is again mixed with the olefin feed.

The alkylation unit contains a large amount of light VOC gases and should be inspected for fugitive emissions. A fired heater or two may also be in use in the distillation section.

105.5 BLENDING

Blending involves mixing the various hydrocarbon fractions to produce finished products. The blending of products can be extremely complicated. Products are blended to meet specification for vapor pressure, sulfur content, boiling point, octane number specifications, etc. Blending occurs in pipelines or tanks and is usually controlled by pumps

and valves. The gasoline blending facilities may be sources of fugitive VOC emissions as discussed in section 301. The inspection of storage tanks is discussed in section 302.

106 INSPECTOR SAFETY

An oil refinery can be a very dangerous place if safe procedures are not followed. But by using caution and common sense, injury can be avoided. Refineries provide extensive training to their personnel to insure a safe work environment and no inspector, for their own safety, should enter a refinery unescorted. In general, escorts are available to take inspectors wherever they may need to go, and will make sure that all safety policies are upheld. These escorts are familiar with the proper personnel to contact if a sample must be taken, if equipment must be accessed, etc.

106.1 SAFETY EQUIPMENT

The normal safety equipment required to enter a process unit in the majority of refineries are, at a minimum:

- Fire resistant clothing or coveralls
- Safety glasses with side shields
- Steel toed boots with six-inch uppers
- Hearing protection
- Hardhat

Splash goggles, gloves, and personal monitors such as H2S ampoules should also be available.

Nomex coveralls are the most common fire resistant type of coverall worn by refinery workers. In the past, visitors were not required to wear **fire resistant coveralls**, but now most refineries require that everyone entering a process unit wear them. Most large refineries have fire resistant coveralls available for visitors, but inspectors should acquire their own. Refineries do not guarantee that coveralls will always be available.

Small refineries may not require visitors to wear fire resistant coveralls. If fire resistant coveralls are not available for an inspection, make sure you wear a **long sleeve shirt**, preferably of cotton. Cotton causes less

static electricity and sparks. The long sleeve shirt is required and will help protect your arms, especially from hot equipment, chemicals, and sharp objects.

Safety glasses with side shields are required for an inspection. Safety glasses protect the eyes from dusts and liquid splashes, especially during sampling. They should also be worn around running machinery for protection against flying debris. **Splash goggles** are also required in some areas where chemicals are present. Goggles worn on the hard hat are always available and do not require extra effort to carry. Many areas have color coded lines painted on the ground to indicate areas where splash goggles are required.

Sturdy shoes or boots must be worn for all inspections and **steel toes** are recommended. The boots should have a thick oil-resistant tread to help prevent slipping on slick surfaces, which could lead to severe injury. The boots may have to be worn for long periods while climbing and walking, so good quality boots are a must. Caution must be exercised when wearing steel-toed boots. When they are new they can make walking more difficult. Walk slowly and carefully to prevent falling, slipping or tripping.

An inspector should always carry **ear plugs or ear muffs**. Many types of equipment are loud and can damage your hearing. Even a short exposure to loud noises could cause permanent damage to the ears. Many areas have color coded lines painted on the ground to indicate areas where hearing protection is required.

Hard hats are required for all refinery inspections. Hard hats are required when there is a possibility of injury from falling objects or from bumping your head on protruding or overhanging objects. This includes just about every area in the refinery. The helmet should be made of nonconductive material and should fit comfortably. Caution: you will be about two inches taller with a hard hat on and will have to stoop a little lower to avoid overhead objects. Unfortunately, this is a lesson most of us learn several times, and it makes us all the more thankful for the hat.

A **face shield** is required when sampling a hot or corrosive substance. The shield prevents the material from splashing or popping on the face and eyes.

Inspectors should carry **gloves**. Gloves should be worn during sampling to protect your skin from chemicals. When handling chemicals such as gasoline, a pair of neoprene or PVC type gloves will protect the hands without becoming saturated. Many ladders around process units may be covered with oil and grime and wearing gloves may improve the grip on a ladder and protect the hands. Gloves will also protect the hands from hot surfaces.

Most facility operators will be able to notify inspectors of any special hazards, but it is always a good idea to have personal monitors available for safety. Some of the monitors available for inspectors are lower explosive limit detectors, hydrogen sulfide (H2S) monitors, carbon monoxide (CO) monitors, and low oxygen (O2) detectors. These monitors are very important when entering an enclosed area. Many of the hazards, such as H2S, CO, and low O2, are not detectable by the human senses at levels which are harmful.

106.2 SAMPLING

In many cases it is best to allow refinery personnel to gather samples for you, but make sure you watch them do it. Never turn a valve or alter any refinery equipment. Doing so could cause serious problems. Let refinery operators turn valves and operate equipment so that you are released from any liability.

106.3 EMERGENCY HORN SIGNALS

Emergency situations, such as fires or injuries, occasionally occur at refineries. In order to immediately notify everyone, especially the emergency crews, most refineries have a system of alarm horns which can be heard throughout the facility. Before an inspection begins, ask facility personnel about the types of alarms used at that refinery.

They may have several alarm signals such as ten short toots, one long toot, etc. The most common alarm usually indicates a **potential fire**, which may indicate a spill or a release of explosive gas. Common refinery practice is to require that all vehicles stop and shut off their engines when a potential fire signal sounds. This is to prevent the vehicle, which is an ignition source, from unknowingly entering an area where an explosive gas cloud may be present. After stopping, the vehicle operator must find out the extent of the potential fire area and determine if it is safe to proceed. In this situation, stay with the refinery staff. They will know the safest and quickest means to avoid hazards.

At the sound of a fire alarm, most refineries require that all non-refinery personnel proceed to the nearest exit or safe area. Man down or injury signals are generally intended for the medical crews and usually do not require special action from the air quality inspector. Do not interfere with the refinery operators during an emergency. If you see an accident, fire, or upset about to occur get out of the area and notify refinery personnel. An all clear signal is usually sounded when the emergency situation is over and normal operations can resume.

106.4 HAZARDS

1. **Hydrogen sulfide** (H_2S) - Hydrogen sulfide is a deadly gas. It smells like rotten eggs, but at dangerous concentrations it overcomes the senses and cannot be detected. It is heavier than air and sinks into low areas. It is found naturally in most crude oils. If you must enter a low area with poor ventilation that may have hydrogen sulfide, use a detector or ampoule to test the area for H_2S before entering.

2. **Heat** - Be careful of what you touch, many pieces of equipment are very hot and can cause severe burns. If equipment must be touched, one method of testing is to squirt water (or spit) on it: if the water sizzles or steams, the object is too hot to touch.

3. **Hydrofluoric acid** - Hydrofluoric acid is used as a catalyst in some alkylation units. It is dangerous chemical and will burn you skin. Avoid going near areas that have hydrofluoric acid. Use goggles, gloves and

protective clothing to protect yourself from contacting acid when you are near the alkylation plant. If you are exposed, seek treatment from a doctor immediately.

4. **Heights** - Inspections at refineries may require you to climb to high areas. The wind may be much stronger in high areas than near the ground. Make sure you hold on to railings. Falling may lead to serious injury or death. Never go to high areas in the rain or during thunderstorms. Lightening is much more likely to strike high areas. Keep in mind that in most high areas there are very limited escape routes in case of an emergency.

5. **Asbestos** - Refineries may have a lot of asbestos. It is usually used as an insulator. Asbestos is dangerous when airborne. If asbestos fibers get into the lungs, asbestosis (a serious lung disease), could occur later in life. Do not disturb asbestos if you find it. Should an air quality inspector observe an asbestos removal operation, it is his/her duty to assure that proper asbestos handling procedures are being followed.

6. **Explosions** - No smoking. Any electrical equipment you use should be approved for use in potentially explosive areas.

7. **Fires** - Fires do occur in refineries. Remember that in order to have a fire, fuel, air, and a spark are required. Most refineries make sure that the three of these never exist at the same place at the same time. This is why sparking tools/equipment are so closely controlled, and one reason why fuel leaks are not tolerated.

8. **Noise** - Some machinery at a refinery can be damaging to the hearing. Areas of dangerous noise exposure may be marked. If you are in a loud areas, use your earplugs. Hearing damage can occur without pain or discomfort. Always carry earplugs with you during inspections.

9. **Sulfur dioxide** - Sulfur dioxide smells like burnt matches or fireworks. If sulfur dioxide starts to give you discomfort, get out of the area.

106.5 PROCESS UNIT SAFETY

Heaters and boilers - Inspectors should beware of hot surfaces. Carry your gloves. Equipment may be too hot to handle. Before a firebox viewing door is opened, check that there is a negative pressure in the firebox and make sure your face is not pointed toward the opening; open the doors from the side. Request that the door be opened by a qualified operator. Inspectors should never open viewing doors to any heaters or boilers.

Fluid catalytic cracking units - These units may use ammonia injection and may have hydrogen sulfide emissions. Ammonia and hydrogen sulfide are poisonous in high concentrations. The electrical equipment for these units operates at high voltages, especially in the area of the electrostatic precipitator. Use caution around electrical circuits and wires. Basically, the FCC contains just about every type of hazard you will find in a refinery. Keep your eyes open, be aware, use good common sense, and follow standard safe practices to avoid injury.

Flare systems - Beware of hydrogen sulfide and equipment which starts automatically. If an emergency flare release occurs, get out of the area. And then turn around and get a visible emissions reading. It is also possible for a flare to emit raw (unburned) gases, including H_2S.

Sulfur recovery units - Beware of hydrogen sulfide and caustic solutions.

Storage Tanks - Be careful climbing stairs. Hold on to hand rails and don't try to climb or descend too quickly. Be prepared for wind on top of tanks; it can be strong and gusty. Walk only in the marked pathways. The tops of tanks may be rusted and perhaps cannot support the weight of a person. Check with facility operators to see that a roof has been safety tested before entering, especially when inspecting fixed roof tanks. Use caution when climbing down ladders to floating roof tanks. These ladders can vary from nearly vertical to horizontal. If a floating roof has product on top of it, do not enter. If a floating roof is more than five feet below the tank rim, the roof is considered a confined space and appropriate procedures must be followed. A more extensive discussion of the hazards and procedures for confined spaces is included in section 302, Storage Tanks. Some facilities require that a standby with a radio be present whenever one climbs to the top of a storage tank.

Confined spaces - Most refineries have rigorous policies for entering confined spaces. Confined spaces not only include vessels and tanks, but trenches, roofs of floating roof tanks, etc. Respect the refinery policy for confined space entry. These policies are based on the requirements of the Occupational Safety and Health Association (OSHA) and are intended to protect you from dangerous gases and oxygen deficient atmospheres.

Rotating equipment - Leave the necktie at home. Be aware that some equipment may start automatically at any time. Be extremely careful when checking rotating equipment for VOC leaks. The probe on the VOC analyzer should not be allowed to touch a rotating shaft.

Stairs, scaffolds, and climbing - Stairs, ladders, walkways and other areas can have greasy areas. Use handrails to prevent slipping and falling. Climb ladders with both hands and use gloves to improve your grip if the rungs are greasy. Climb stairs carefully and keep at least one hand on the handrail. When following someone up a ladder, wait until they are safely on the next platform before starting your climb. Similarly, when following someone down a ladder, wait until they are safely on the ground or next platform before starting down.

Safety waivers - Do not sign safety waivers. You may sign "sign in" or "sign out" sheets and similar documents. Make sure you know what you are signing.

Saturation inspections - When more than one inspector is present, make sure that each inspector has a copy of the refinery's general safety rules and emergency procedures. If the inspectors are going into separate areas, a refinery representative should be made available to escort each inspector to their desired location. Stay in contact with all the inspectors involved in the inspection to be sure that no one gets hurt and left behind. Have a list of all the inspectors involved in the inspection, and plan to meet in one area at a specific time or at the end of the inspection so that no one is left behind.

201 GAS-FIRED HEATERS

201.1 INTRODUCTION

Gas-fired heaters are used to transfer heat from the combustion of fuel gases to water, oils, gases, or other fluids. The combustion process can produce significant quantities of air pollutants, namely:

- Nitrogen oxides (NOx)
- Sulfur oxides (SOx)
- Carbon monoxide (CO)
- Particulate Matter (PM) or smoke

In the air basins where refineries are located, the refineries are responsible for an average of about eight percent of the NOx emissions and about 25 percent of the SOx emissions. Their contributions to CO and particulate emissions are less than one percent. Of the total pollutants produced by refineries, fired heaters are responsible for about 70 percent of the NOx emissions and about 20 percent of the SOx emissions. Catalytic crackers and fluid cokers are responsible for most of the remainder of the NOx and SOx emissions.

Figure 201.1 shows a simplified illustration of one type of these fired heaters.

This section is designed to help you, the field inspector, to conduct a complete and efficient compliance inspection of gas-fired heaters. The location and service of the heater, be it a boiler or a unit process heater, should not have a major effect on how the equipment will be inspected. The operation of heaters is similar throughout the refinery. The inspection procedure should not vary significantly from heater to heater except when certain pollution control equipment has been added.

After a short description of how a gas-fired heater works and how they are used in refinery processes, we will address how to assure that a heater is in compliance with the regulations. Due to economic considerations and air emission limitations, liquid and solid fuels are seldom burned in refinery heaters. Consequently, this section discusses only gas-fired heaters. Oil-fired and solid fuel-fired heaters will be discussed in a later edition.

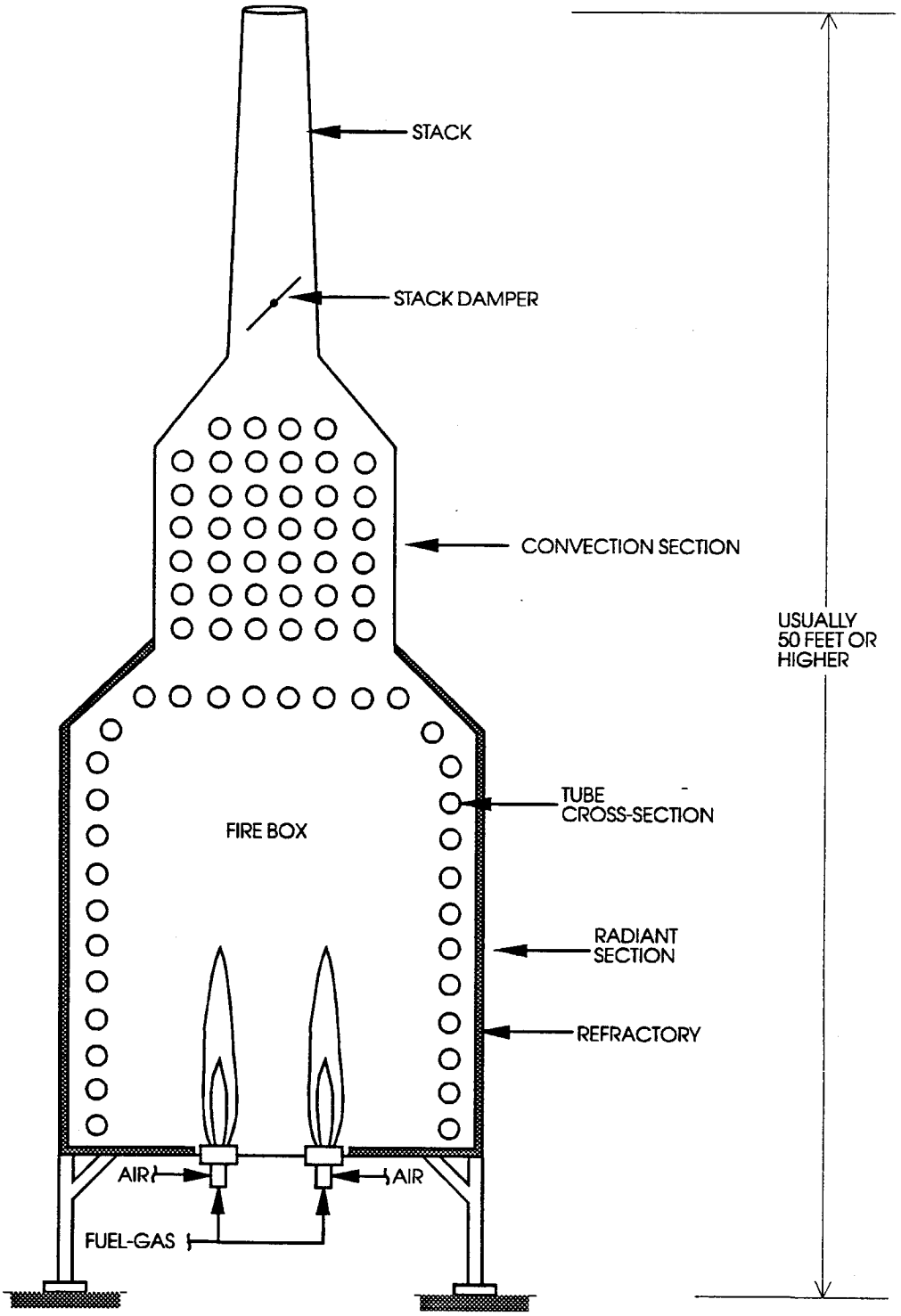

Figure 201.1
Conventional Gas-Fired Heater

201 GAS-FIRED HEATERS

201.1.1 Uses of Fired Heaters

Most refinery processes take place at high temperatures and nearly all of this heat is generated using fired heaters. These furnaces may heat oil or gas directly or may produce steam for heating and other uses. After the oils are heated and a process is complete, the energy is often reused by recovering the heat through heat exchangers.

Boilers

Within refineries, fired heaters are often classified as either boilers or process heaters. "Boiler" usually designates a heater designed for the production of steam. Boilers may be located throughout a refinery or they may be consolidated into one area, such as the Steam Generation Plant.

In most refineries, the dependable generation of steam is critical to safe operation. In addition to many other uses for steam, the most important may be to allow the safe shutdown of equipment during an electrical power failure. Most essential electric motor driven pumps and compressors (for example the instrument air compressors) have steam driven backup systems on standby so that the process units can be shut down without catastrophe.

Process Heaters

"Process Heater" usually refers to a heater whose function is to heat liquid and gaseous streams other than boiler-feedwater. A list of the most common processes which require one or more heaters includes distillation, cracking, reforming, hydrotreating, or hydrogen production.

The most common use of process heaters in a refinery is for the heating of liquids prior to distillation. Distillation is the boiling process used to separate petroleum streams into their more volatile and less volatile components. In the thermal cracking processes, heavy oils are heated in fired heaters to very high temperatures before they decompose or 'crack' into lighter oils and gases. Hydrotreating, hydrocracking, reforming, and hydrogen production are catalyzed chemical reactions which also require very high temperatures.

201.2 PROCESS AND CONTROL

201.2.1 Basic Heater Operation

While there are many variations in the designs and uses for heaters, the basic operation of most gas-fired heaters is similar. Fuel gas or natural gas is introduced to the heater through a burner where the fuel is mixed with air and ignited. The flame then radiates heat to the surrounding tubes which carry the target fluids. This section of the heater, where the primary method of heat transfer is radiation, is often called the **firebox** , furnace, or **radiant section** of the heater. The hot exhaust gases from the radiant section may then be directed to flow over other heat exchange tubes before they are emitted to the atmosphere through the stack. This latter section of heater tubes may be called the **convection section** because the primary method of heat transfer is convection. In this example, convection is the transfer of heat from the hot gas as it passes over cooler heat exchange tubes.

Fuel gas Characteristics

The single most important factor affecting emissions from gas-fired heaters is the quality of the fuel gas. The SOx level in the stack gas is directly proportional to the level of sulfur compounds found in the fuel gas. Consequently, most fuel gases must be treated (scrubbed) to remove sulfur before they can be burned as fuel. In order to maintain proper combustion at the burner tip, it is very important to maintain a constant quality fuel gas source. Fluctuations in properties such as the molecular weight (proportions of methane : ethane : propane : butane : etc.) can affect NOx, CO, and visible emissions.

Most process units within the refinery produce a by-product of light gases which can be burned in the refinery fuel gas system. These gases can be pressured to a central gas-treating unit where they are mixed and treated to remove sulfur compounds (sweetened). In some cases, the fuel gas streams are treated to remove sulfur in the individual process units but are still usually sent to a central gas plant where the various gas streams are mixed into one homogenous fuel gas source. Other functions of the gas plant include the separation of heavier components such as pentanes, butanes and propane from the fuel gas.

Natural gas is also either fired separately in some heaters or brought in and mixed with the refinery gas in the fuel gas system.

Sulfur Removal

In the sulfur removal process, gases rich in **H_2S** (sour gases) flow upward through a vertical tower where the gases are contacted with **amine** solutions which absorb the H_2S. This absorption process is also known as **scrubbing**. The amine solutions, such as **MEA** (mono-ethanol-amine) or **DEA** (di-ethanol-amine) and water, flow downward through the vessel across trays or packing which distribute the solution and improve contact between the liquid and gas. The H_2S-rich amines are then pumped to the sulfur recovery plant where the H_2S is removed by steam stripping, and processed. The stripped amines (lean) are then recycled back to the H_2S absorption towers.

The sulfur recovery system is subject to upset conditions, as are all process units. Upset of any of the H_2S absorption towers can result in high H_2S levels in the entire refinery fuel gas system. Other causes of high levels of H_2S in the fuel gas include contamination of the amine solution with water (amine cooler leak) or salts (of amine oxidation) as well as pump failures, etc.

These upsets can result in H_2S in the fuel gas above the allowable limit and should be reported promptly in a breakdown report. In some cases, a Notice of Violation is warranted. It should be noted that an alternative of temporarily sending a sour gas stream to the fuel gas system is sometimes to send the gases to the flare. This can result in the same amount of H_2S being burned and emitted as SO_2, but avoids the continuous monitor for H_2S in fuel gas and the corresponding regulation.

Burners

Conventional burners are generally the "**pre-mix**" type, where all of the air and fuel are mixed within the burner before they are introduced to the firebox and ignited. A pre-mix burner is illustrated in Figure 201.2. Many modern burner types (to be discussed in section 201.2.2) are not the pre-mix type. Most can reduce NOx production during combustion by introducing the fuel to the firebox in stages, by automatically recirculating firebox gases, or both. Many burners in furnaces in California are now the new low-NOx type. This technology will probably spread to all of California in the next few years.

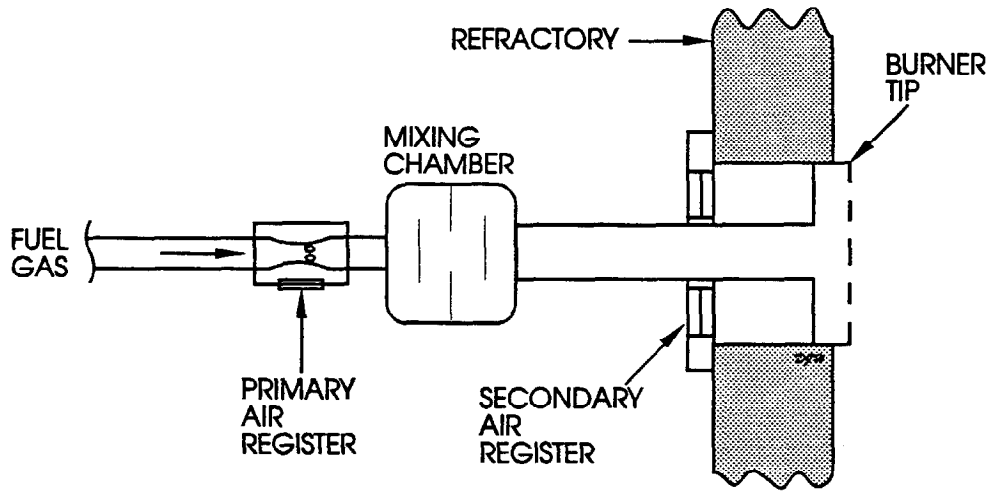

Figure 201.2
Gas Pre-mix Burner

One difference between burners for boilers and burners designed for process heaters is that those in boilers can be much larger and capable of producing much more heat than burners used in process heaters. This is due to the fluid characteristics and safety aspects of heating water versus heating oils. There is more control over the flames with several smaller burners than with one large one.

Natural Draft

As gases are heated they tend to expand, and if the pressure stays constant, the density of these gases decreases and the gases tend to rise and be replaced by cooler, denser gases. In a heater and stack, the hot gases tend to rise up the stack and cause a slight vacuum near the base of the heater. It is this small vacuum in the firebox which sucks air in through the secondary burner ports and possibly through any other openings such as air leaks in the skin or joints of the firebox. This tendency for hot flue gases to flow upward through the stack and draw air into the firebox is known as natural draft.

Forced Draft and Induced Draft

The addition of pollution reduction equipment and/or energy saving equipment can sometimes interrupt natural draft. In these cases, fans can be installed to push the incoming air, the outgoing stack gases or both. The use of a fan on the inlet air is known as forced draft and the use of a fan on the outlet flue gases is known as induced draft.

The addition of catalytic NOx reduction into the flue gas path will usually add enough flow restriction that a fan is required, especially if the catalyst is located on the ground. Similarly, the addition of a combustion-air preheater, which transfers heat from the effluent gases to the incoming air, may require a fan.

201.2.2 Nitrogen Oxides (NOx) Control Methods

Flue Gas Recirculation (FGR)

Flue gas recirculation, when combined with low excess air operation, is one method which has been used to reduce NOx formation. Exhaust gases are pulled from the stack or firebox and are injected into the inlet air stream. This provides inert gases which lower the flame temperature and lower the oxygen concentration. These effects inhibit the oxidation of nitrogen and can result in significant NOx reduction.

Low-NOx Burners

The most stringent retrofit NOx restriction to date is 0.03 pounds per million Btu of heat input for some heaters. Required by the SCAQMD, this limit is equivalent to approximately 25 ppm, although the ppm value varies somewhat with the fuel gas composition and the excess air used. These limits have been achieved by either replacing conventional burners with "low-NOx" type burners, or installing catalytic NOx reduction, or both. Low-NOx burners are configured to adjust how the fuel and air are mixed in order to minimize NOx production.

A common method for lowering NOx production in gas-fired heaters is called **fuel staging**. This method is illustrated in Figures 201.3, 201.4, and 201.5. First, part of the fuel is burned with excess air and the resulting air-cooled flame does not produce much NOx. Then more fuel is added to combust with the

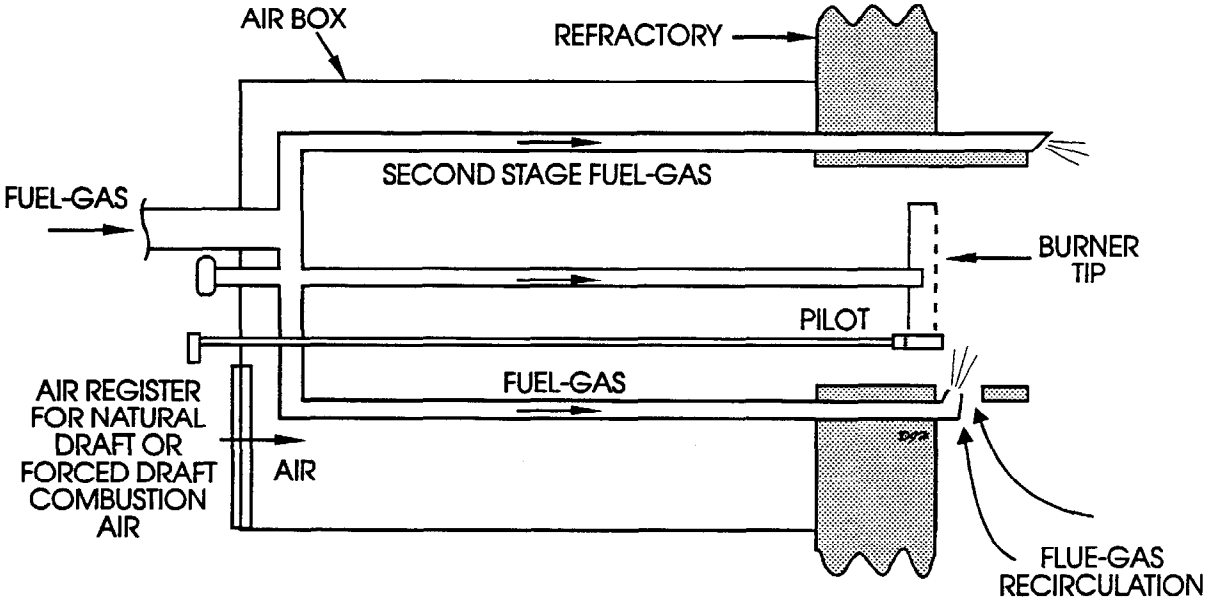

Figure 201.3
Modern Low-NOx Burner with Staged Fuel and Internal Flue-Gas Recirculation

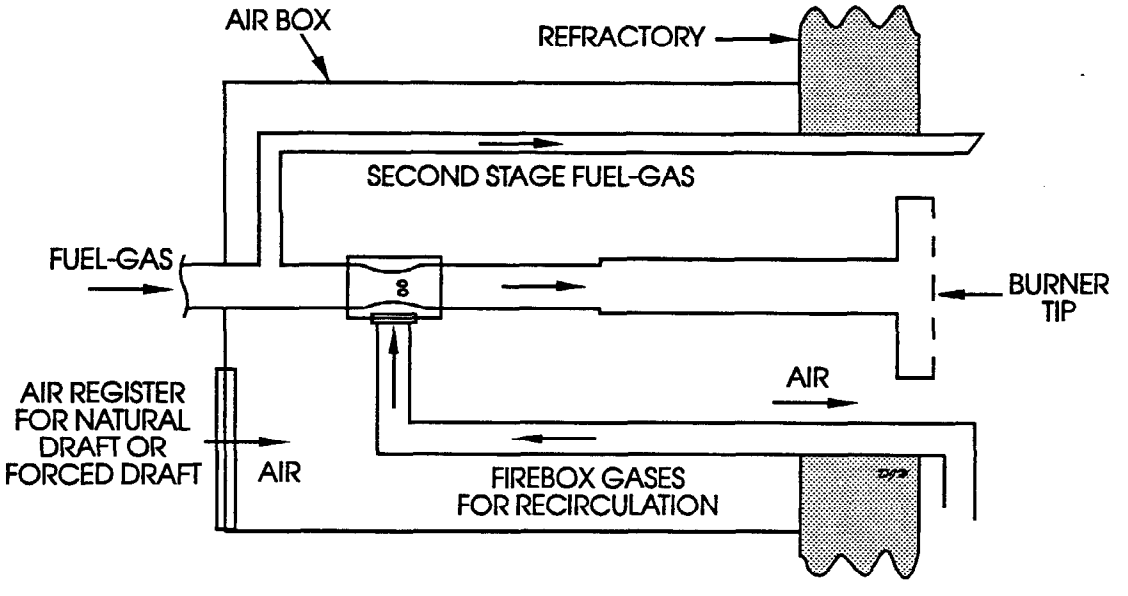

Figure 201.4
Low-NOx Burner with Staged Fuel and Internal Flue-Gas Recirculation

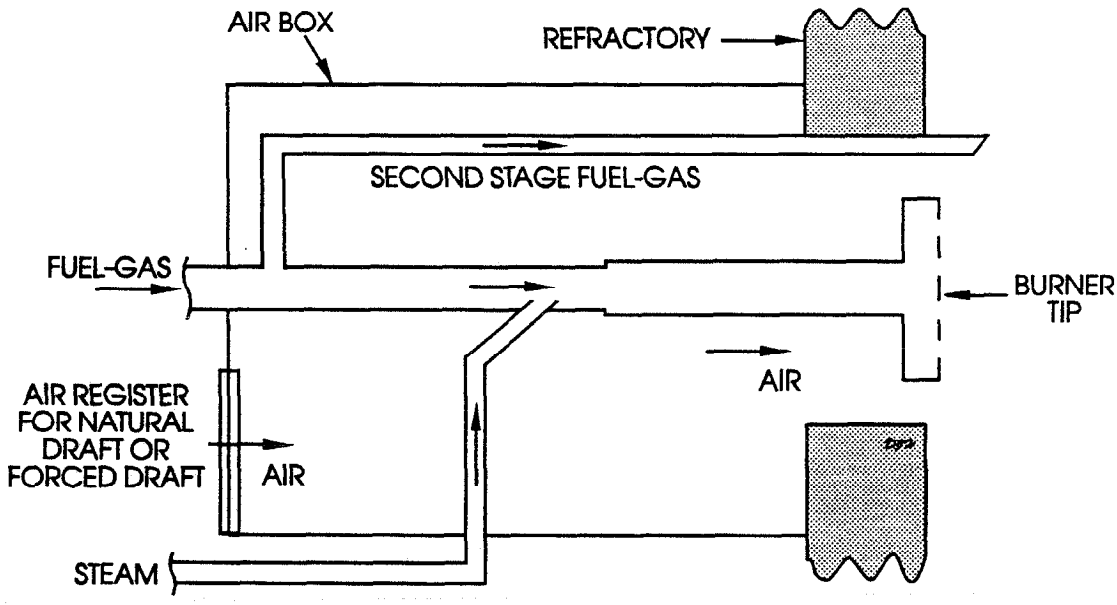

Figure 201.5
Low-NOx Burner with Staged Fuel and Steam Injection

remaining air and the flame temperature is again kept low by the presence of the combustion gases and NOx production is reduced. To assure that the low effluent NOx limit (about 25 ppm) can be met under adverse circumstances, some burners are equipped to allow steam to be injected to further cool the flame, as illustrated in Figure 201.5. The use of steam, however, is probably not an energy efficient means of control.

Recent burner designs usually do not need steam. Some of these incorporate both fuel staging and **internal flue gas recirculation** to reduce NOx. Two examples of internal flue gas recirculation burners are illustrated in Figures 201.3 and 201.4. In this design, gases from within the firebox are recirculated to the burner. These gases, located along the floor or walls of the heater, are essentially the same as the combustion products found in the stack, and the recirculation process gives advantages similar to FGR.

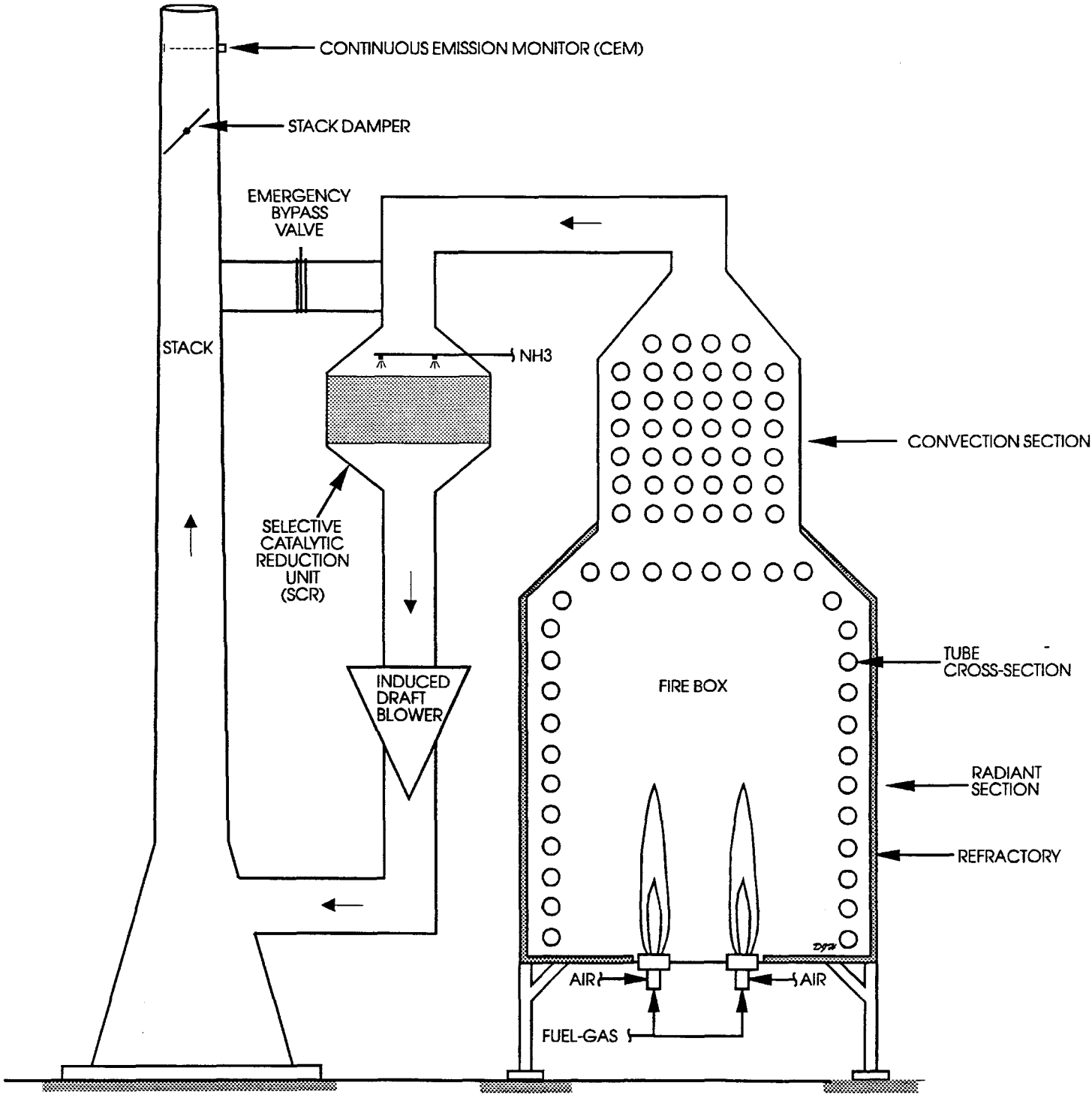

Figure 201.6
Gas-Fired Heater With Retrofit SCR System

Selective Catalytic Reduction (SCR) of NOx

These units are catalyst beds designed to convert NOx to nitrogen and they generally require the addition of ammonia, urea, or a similar additive. The most common names for this equipment are Selective Catalytic Reduction and SCR. An example of a retrofit SCR system is illustrated in Figure 201.6. These catalyst beds are designed to operate at about 550 °F to 750 °F, a range that includes common stack gas temperatures for heaters equipped with convective heat recovery. Excess ammonia may pass through the catalyst bed and into the atmosphere. This is known as **ammonia slip** and in extreme cases may be visible as a yellow or brown plume from the stack. The temperature of the catalyst bed is a critical parameter of SCR operation which determines the rate and extent of the NOx conversion. Often the Permit to Operate will include an allowable temperature range. Inspection of an SCR should include determining that the SCR temperature is close to historical values.

Non-Catalytic NOx Reduction

A second type of NOx reduction unit operates in the 1400 °F to 1900 °F range and does not require the expensive catalyst required by SCR. Ammonia is distributed into the stack gas and the reduction reaction is accelerated at the high temperatures. This process is commonly referred to as **Selective Non-Catalytic Reduction (SNCR** or SNR)

201.2.3 Carbon Monoxide (CO) Control Methods

In the effort to minimize NOx production in the burner flame, the amount of excess air is often minimized. As a result, incomplete combustion may occur and the level of CO may increase to unacceptable levels. Although this is not common, some heater configurations may require a catalyst bed specifically to oxidize CO to CO_2.

201.2.4 Waste Gas Burning

Heaters are sometimes also used for the incineration of low-heating-value waste gas. This can save energy and be an efficient method of disposal of the gas. This secondary use of a heater as an emission control device should not be discouraged but the inspector must assure that the waste gas is being handled properly.

The Permit to Operate should contain the required conditions for the waste gas burning operation. In some cases special burners are required to properly burn low-heating-value gases. Contaminants such as high sulfur should not be present in the waste gas. Any toxic compounds which are likely to be in the waste gas should be evaluated and sampled for in a source test (collection of emissions samples). During emission sampling, the waste gas should be introduced to the heater at normal or maximum expected rates.

201.3 RULE DISCUSSION

This section discusses the various rules which limit emissions from fired heaters in refineries. In many cases, rules have been written to apply specifically to petroleum refining facilities. However there are also several general rules which apply, especially these regulating visible emissions and odors.

The section is divided into seven parts which deal with some general topics first, and then the five primary pollutants from fired heaters, namely:

- Nitrogen oxides, NOx
- Sulfur oxides, SOx
- Carbon monoxide, CO
- Particulate Matter (PM), and Visible Emissions
- Odors

As a part of the **New Source Performance Standards (NSPS)**, the EPA has issued 40CFR 60.100 (Code of Federal Regulations Title 40, Chapter 1, Part 60, Subpart J), Standards of Performance for Petroleum Refineries. Subpart J affects refinery heaters by limiting SOx emissions or by limiting the amount of sulfur in the fuel gas. Changes to this subpart which may also limit NOx emissions from heaters are in progress. Most air pollution control districts with refineries have also adopted regulations which reflect Subpart J.

California has a few rules which directly affect gas-fired heaters. Section 41700 of the California Health and Safety Code prohibits emissions which cause a public nuisance. Section 41701 places limits on visible emissions (VE) from stacks. In most cases this rule is superseded by more stringent VE rules at the district level.

201 GAS-FIRED HEATERS

All local districts in California which have refineries have adopted rules establishing regulatory requirements for the operation of fired heaters. These regulations are discussed in the following paragraphs.

201.3.1 Exemptions for Old or Small Heaters

Many of the regulations create exemptions or less stringent limits for older or smaller heaters. It is common for rules to require all new equipment to meet the most stringent standards but to allow older equipment to function as is until a later date or until it is modified. For this reason it is often necessary to know the date of construction or the date of the latest significant modification for a given furnace. A significant **modification** is defined in 40CFR 60.14 as "... any physical or operational change to an existing facility which results in an increase in the emission rate to the atmosphere of any pollutant to which a standard applies..."

Regulations also often offer exemptions or alternative emissions limits for small heaters. The definition of what is considered a "small furnace" varies widely from district to district. Furnaces are most often classified by the amount of heat which can be safely and efficiently generated. This heat generating capacity is usually measured in million Btu per hour and these are the units most often seen in the regulations. In some air quality districts, no heaters are exempt. In other districts, heaters with a capacity of less than 5 million Btu/hr., or as high as 1,775 million Btu/hr may be exempt from the regulations. Note that this is the amount of heat put into the furnace, not the amount absorbed by the circulating fluids. The actual heat input is determined by measuring the fuel gas rate and the fuel gas heat content. Fuel heat content is primarily a function of its molecular weight.

201.3.2 Continuous Emission Monitors (CEMs)

The use of continuous monitors for compliance determination is becoming more common each year. Quality assurance (QA) procedures for the acceptable operation of these monitors are found in 40CFR 60, Appendix F. These QA procedures include:

- daily calibration with two concentrations of span gas
- quarterly auditing of the span gas cylinder
- yearly comparison with source test to determine relative accuracy
- proper recordkeeping of the QA steps taken
- records available for inspection

CARB Method 100, Procedure for Continuous Gaseous Emission Stack Sampling, provides specific requirements for the sampling methods. Method 100 is a CARB approved alternative to EPA reference methods, in particular EPA methods 3, 6, 7, and 10.

SCAQMD Rule 218 requires **certification** of each type of continuous emission monitor. This is a three part process including written application, installation and source testing, and final application evaluation. For facilities subject to the Regional Clean Air Incentives Market (RECLAIM), Rule 218 has been superseded by Rules 2011 and 2012 of RECLAIM. BAAQMD has similar requirements for CEM certification as defined in their Manual of Procedures, Volume 5.

201.3.3 Regulation of Nitrogen Oxide (NOx) Emissions

Nitrogen oxide emissions are responsible for a large portion of the photochemical smog which plagues California. Refinery heaters are responsible for a significant part of stationary source NOx emissions and the air pollution control districts now have regulations which limit these NOx emissions. A list of most of these regulations, the districts in which they apply, and the emission limits, is included in Table 201.1.

Normally, NOx emissions are determined with periodic source tests, conducted by either district specialists or by contracted testers which have been CARB certified. However, continuous emission monitors (CEM) for NOx are becoming increasingly common. There is also a trend toward the use of portable analyzers if proper stack gas sampling facilities are available. A common item in recent SCAQMD permits is a requirement for heated sample lines from the stack to ground level. Units for measuring NOx emission concentration can be in parts per million by volume (ppm or ppmv) or in pounds of NOx per million Btu of heat generated in the furnace (lbs./million Btu).

Table 201.1
District Regulations Limiting Oxides of Nitrogen (NOx) Emissions

District	Regulation	Limit
BAAQMD	9-3-301	< 175 ppm NOx in stack-gas for heaters rated above 1.75 billion Btu/hr.
BAAQMD	9-3-303	< 125 ppm NOx in stack-gas for heaters built or modified after 4-19-'75 and rated above 250 million Btu/hr.
SCAQMD	429	exemptions from rule 1109 during startup and shutdown.
SCAQMD	1109.b.7.d	Applies to heaters rated at > 40 million Btu per hour
SCAQMD	1109.b.1.B.i	36% of heaters (by heat input) are limited to 0.03 lb NOx /million Btu. Remainder of heaters must average 0.14 lb NOx /million Btu. Subject to Alternative Emission Control Plan (AECP).
SCAQMD	1109.b.1.B.i effective 12-31-95	< 0.03 lb/million Btu or approximately 25ppm for all heaters. Or as specified in AECP.
SCAQMD	1146	< 40 ppm NOx (0.05 lb/million Btu heat input). Applies to heaters rated at > 5 million Btu per hour but < 40 million Btu per hour and subject to AECP.
SCAQMD	2000 thru 2015 effective in 1994	Rules 1109 and 1146 will be replaced by RECLAIM rules 2000 - 2015 for many facilities .
SLOCAPCD	405.A.1	New or expanded facilities shall total less than 140 pounds per hour NOx from all fuel burning sources.
SJVUAPCD	4301.5.2.2	New or expanded facilities shall total less than 140 pounds per hour NOx from all fuel burning sources.

Abbreviations for Tables 201.1 through 201.5

The following abbreviations are used in Tables 201.1 through 201.5:

BAAQMD - Bay Area Air Quality Management District
CFR - Code of Federal Regulations
EPA - U.S. Environmental Protection Agency
MBUAPCD - Monterey Bay Unified Air Pollution Control District
ppm or ppmv - parts per million by volume. Both abbreviations are used because this is how they appear in the corresponding regulations.
SBCAPCD - Santa Barbara County Air Pollution Control District
SCAQMD - South Coast Air Quality Management District
SJVUAPCD - San Joaquin Valley Unified Air Pollution Control District
SLOCAPCD - San Luis Obispo County Air Pollution Control District

201.3.4 Regulation of Sulfur Oxides (SOx) Emissions

The EPA has issued 40CFR, Chapter 1, Part 60, Subpart J, Standards of Performance for Petroleum Refineries. Subpart J affects refinery heaters mainly by limiting SOx emissions or by limiting the amount of H2S in the fuel gas to 0.10 grains per dry standard cubic foot (gr./dscf) or about 160 ppm. The local districts have adopted similar rules, some of which are more stringent.

Most of the sulfur found in refinery gases is in the form of H_2S, although a small amount may be in the form of mercaptan, a hydrocarbon with an H-S ion attached. The EPA regulation, (CFR 40, Chapter 1, Subpart J, 60.104) specifically limits only the H_2S. Some district regulations limit the total sulfur content, measured as H_2S. Be aware of the interpretation in your district's regulation and assure that the sources comply accordingly.

Normally SOx from fired heaters is controlled by removing the sulfur from the fuel gas. Most regulations, including 40CFR, allow the alternative of limiting the SOx from the emission point or of limiting the sulfur in the fuel gas. Almost all refineries choose to treat the fuel gas. Compliance for a fuel gas system may be verified by testing it for H_2S (or for total sulfur content) or by testing the stack gas from one or more representative heaters for SO_2. The SO_2 results must of course be corrected for excess air dilution, normally to 3% O_2.

A list of these regulations, the districts in which they apply, and the emission limits, is included in Table 201.2.

Table 201.2
Regulations Limiting Sulfur Oxide (SOx) Emissions

District	Regulation	Limit
BAAQMD	9-1-110.2	0.05 ppmv SO2, 24 hour average or 0.25 ppmv SO2, 60 minute average or 0.5 ppmv SO2, 3 minute average outside property boundary
BAAQMD	'9-1-302	< 300 ppmv SO2
BAAQMD	9-1-313.2	95% of H2S must be removed from fuel gas.
SCAQMD	431.1.b.3	< 40 ppm sulfur compounds (as H2S) in fuel gas
SCAQMD	431.1.b.5	Requires continuous sulfur monitor on fuel gas.
SCAQMD	407.a.2	< 500 ppm
SCAQMD	2000 thru 2015 effective in 1994	Rules 431 and 407 will be replaced by RECLAIM rules 2000 - 2015 for many facilities .
SLOCAPCD	404.D	New or expanded facilities shall total less than 200 pounds per hour SOx from all fuel burning sources.
SLOCAPCD	404.E	Shall not burn gaseous fuel with more than 50 grains H2S per 100 cubic feet.
SJVUAPCD	4301.5.2.1	New or expanded facilities shall total less than 200 pounds per hour SOx from all fuel burning sources.
All	40 CFR 60.104(a)(1)	H2S in fuel gas must be less than: 230mg/dscm or 0.10 g/dscf or approximately 160ppm for 3 hr average unless exhaust gases are treated for SO2.
All	40 CFR 60.105(a)(4)	Continuous H2S monitor required on fuel gas if H2S is removed prior to combustion.

Table 201.3
District Regulations Limiting Carbon Monoxide (CO) Emissions

District	Regulation	Limit
SLOCAPC	406.A	< 2000 ppmv
SCAQMD	407.a.1	< 2000 ppmv

201.3.5 Regulation of Carbon Monoxide (CO) Emissions

High carbon monoxide emissions generally result from insufficient oxygen during combustion. They are also often accompanied by smoke from the stack and most refineries take significant precautions to eliminate smoke. In many cases, a continuous CO monitor is installed to assure that adequate oxygen is being supplied to the burner.

A list of these regulations, the districts in which they apply, and the CO emission limits, is included in Figure 201.3.

Table 201.4
District Regulations Limiting Particulates and Visible Emissions (VE)

District	Regulation	Limit
BAAQMD	6-301	< Ringelmann 1 or < 20% opacity
BAAQMD	6-305	No particulates which can be identified individually may fall on another's property and cause annoyance.
BAAQMD	6-304	< Ringelmann 2 or 40% opacity during tube cleaning
SCAQMD	401	< Ringelmann 1 or < 20% opacity
SJVUAPCD	4101	< Ringelmann 1 or < 20% opacity
SLOCAPCD	401	< Ringelmann 2 or < 40% opacity

201.3.6 Regulation of Visible Emissions (VE)

All of the local air pollution districts in California have a visible emissions prohibitory rule. These rules vary in wording, but in almost all cases they express the following:

"...no person shall discharge into the atmosphere from any source whatsoever any contaminant, other than uncombined water vapor, for a period or periods aggregating more than three minutes in any one hour which is:

(a) As dark or darker in shade as that designated as No. 1 (or 20% opacity) on the Ringelmann Chart, as published by the United States Bureau of Mines, or
(b) Of such opacity as to obscure an observer's view to a degree equal to or greater than does smoke described in subdivision (a)."

The state standard for visible emissions (Section 41701, California Health and Safety Code) is No. 2 on the Ringelmann chart, or 40% opacity. EPA Reference Method 9 describes in detail how such visible emission evaluations should be properly performed, and how to be certified to perform them. A list of the regulations, the districts in which they apply, and the emission limits, is included in Figure 201.4.

Table 201.5
District Regulations Limiting Odors

District	Regulation	Limit
BAAQMD	7-302	No odors beyond property boundary which remain odorous after dilution with 4 parts odor free air.
BAAQMD	7-301 and 7-303	Limits emission rates of numerous specific compounds. See regulations.
BAAQMD	1-301	see CHSC rule 41700 for public nuisance

201.3.7 District Regulations Limiting Odors

The BAAQMD is the only district which has regulations which place specific measurable limits on odorous compounds. A list of these regulations is included in Figure 201.5.

When faced with an odor source which is causing a public nuisance, most district inspectors will cite California Health & Safety Code (CHSC) Section 41700 which states:

"Except as otherwise provided in section 41705 [agricultural exemptions], *no person shall discharge from any source whatsoever such quantities of air contaminants or other material which cause injury, detriment, nuisance, or annoyance to any considerable number of persons or the public, or which causes or have a natural tendency to cause, injury or damage to business or property."*

201.4 INSPECTION PROCEDURES

The following inspection procedures will give you a general description of how to inspect the fired heaters typically found in a petroleum refinery. Remember, this section is only an outline to provide you with guidance on how to conduct the inspection and what to look for. You should place a copy of the applicable district rules in the appendix of this manual under Legal Requirements. You

should refer to your rule for specific requirements for which compliance must be determined. It is important to remember that you represent your agency and have responsibilities and liabilities. Be sure to follow your agency's policies.

201.4.1 Pre-Inspection Procedures

The objective of an inspection is to determine a facility's compliance with district regulations and Permits to Operate. It is important to **prepare** for the inspection prior to your visit to the site.

File Review

The following File Review section follows a sequence similar to that found on the Gas-fired Heater Inspection Form (Figure 201.3).

Prior to the site inspection, the inspector should **review** all information available in the **district source files** including: permit applications, approved permits, equipment lists, conditions for each permit, previous inspection reports, notices of violation, breakdown reports, enforcement actions taken, complaints, variance histories, alternative emissions control plans, abatement orders, source tests, processes involved at the facility and emissions inventory.

The inspector may wish to complete some portions of the inspection documentation before arriving at the facility, as this will save time during the pre-inspection meeting. If your district has checklists or rule specific forms, use them.

A suggested inspection form for heaters is included in Figure 201.3. The form has been set up with pre-inspection data in the left hand column and the related field acquired data in the right hand column. This may help the inspector to quickly determine whether or not the equipment meets the regulations and Permit requirements.

Short summaries of the district regulations for gas-fired heaters are included in Tables 201.1-201.5. Please review your district's regulations and do not assume that the tables included here are up to date or complete. These tables are included for guidance and are not intended to be an authoritative list of applicable regulations.

Check for exemptions. Record the **date the heater was built or last modified** and compare it to the regulatory exemption dates. This is likely to be a critical piece of information for determining what the emissions limits are. This date will also help confirm what auxiliary equipment was required under the Best Available Control Technology (BACT, see glossary) rule at the time of construction. In general, BACT requirements are included as a part of the permit conditions.

Record the **rated BTU input** for the heater and compare it to the regulations. Emission limits and auxiliary equipment requirements are usually determined by the heat input capacity of the heater.

Note the date of the last source test and the test results. The test history, depending on whether it is good or marginal, will help you to decide when another source test may be required. Please note that all source testers must be evaluated and certified by CARB. For comparison, list the applicable emission limits according to your district's regulations and the Permit to Operate. If the source gave marginal results for one or more pollutants, you may wish to make use of portable test equipment for a rough evaluation.

Determine the limit allowed for **sulfur in the fuel gas** and note whether a continuous sulfur or H2S monitor is required.

Examine the Permit to Operate for specific **equipment requirements** such as low-NOx burners or SCR, etc. The permit also may have requirements related to 1) an ammonia injection system for SCR and SNCR systems and 2) the operating temperature of the NOx reduction unit. Continuous emissions monitors for NOx, SOx, CO, etc. may also be required.

Regulation Review

You should review any references to the specific rules which are noted in the source files. In particular be familiar with each standard and exemption in the rule. Discuss the regulation with experienced personnel and review any policies your district may have. Make sure that you receive consistent interpretations on how to apply the requirements of the rule.

Figure 201.7
Gas-fired Heater Inspection Form

Pre-Inspection:	Field Inspection:
Facility name:	Date/Time:
Heater ID number:	Inspector:
Permit number:	District:
Permit expiration date:	Facility address:
Process Unit:	Facility contact person(s)/title(s):
Heater service:	
Date heater was built or last modified:	Visible emissions noted?
Btu rating:	Excessive odors noted in area?
Is unit subject to NSPS Regs.?	Description of odor:
Applicable emission limits: NOx: SOx: CO: PM: Are CEM's required?	CEM's in operation? NOx level: SOx level: CO level: Field test results (if any) and method used:
Date of latest source test: Results:	Fuel firing rate: % oxygen in Stack gas:
Limit for sulfur in fuel-gas: Is a continuous monitor for Sulfur in fuel-gas required?	Sulfur or H2S in fuel-gas: Any sulfur excursions noted?
Is continuous NOx monitor installed?	NOx concentration from continuous monitor (if any): Any NOx excursions noted?

Figure 201.7 (continued) Gas-Fired Heater Inspection Form	
Pre-Inspection:	Field Inspection:
Are low-NOx burners installed? If yes, manufacturer/model of burner:	Do low-NOx burners agree with permit?
Is catalytic NOx reduction(SCR) installed?	Is SCR in operation? What is ammonia injection rate? Evidence of high ammonia slip? Operating temperature:
Is non-catalytic NOx reduction (SNCR) installed?	Is SNCR in operation? What is ammonia injection rate? Evidence of high ammonia slip? Operating temperature:
Is flue gas recirculation installed?	What is flue gas recirculation rate?
	Description of flames in firebox: (short, long, lazy, color, flame impingement).
Additional provisions in Permit to Operate:	
Record keeping requirements:	

Equipment Check

Make sure that you have the following equipment available for use during the inspection: vision protection, hearing protection, safety shoes, hard hat, gloves, fire retardant clothing (e.g. Nomex), identification, business cards, pens, wipes, inspection forms, and hydrogen sulfide detector ampules. Optional equipment might include a Draeger test pump with detector tubes, or portable analyzers for NOx, SOx, CO, O_2, H_2S and hydrocarbons. Fuel gas samples will require a sample cylinder, adaptor fittings, and chain of custody forms. A Scott air-pack may be advisable if sampling sour gases. Welder's lenses may help for viewing flame and burner characteristics.

Pre-Entry and Entry

When you arrive at the refinery observe the facility from outside. Note any odors or visible emissions and note the size and layout of the facility. A drive around the perimeter may be useful. Enter the facility through the normal public access and request to see the previous contact person mentioned in the files. Depending on the facility, this may be the environmental coordinator, production manager, supervisor, president, operator or maintenance worker. Always present your business credentials immediately to avoid confusion.

If the source is unfamiliar with your district's authority, be prepared to cite and provide copies of California Health & Safety Code (CHSC) Section 41510: Right of Entry, and Section 42303: Information Required. Know and follow your district's policy if the facility refuses entry.

Pre-Inspection Meeting

Before an inspection tour begins, the inspector should meet with the source representative to obtain operating information. The inspector should state the purpose of the inspection and identify the equipment which will be inspected. Facility and equipment information can be verified during this meeting. Record the contact name, title and phone number, as well as the date, time and your own name. Discuss safety procedures and whether or not there are currently any abnormal operations, maintenance, or other concerns.

If you have not already reviewed permits in the pre-inspection, you should request to see a copy of the permit(s) for the facility and check to see if the permit(s) is current and valid. Also, check existing permit conditions and ask if any changes have been made to the operation which are not reflected in the permit.

201.4.2 Facility Inspection Procedures

The following Facility Inspection section follows a sequence similar to that found on the Gas-fired Heater Inspection Form (Figure 201.7).

Check-in With the Unit Operator

If visible emissions or odors were noted in your overview of the facility, you may wish to investigate them first. Otherwise, proceed to the scheduled operating unit and follow proper check-in procedures. These procedures always require that you obtain permission to enter the unit from the operator in charge who can usually be found by reporting to the control room. In almost all cases, the district inspector will be accompanied by a representative of the company who will follow these procedures. However you should be aware of their procedures and be sure they are followed. **Check-in with the unit operator is extremely important to your safety.**

The inspection is performed by checking the Permits to Operate for each permitted item and making sure the equipment runs in accordance with district regulations. Permits must be posted or otherwise available for inspection and they must be current. When you inspect the equipment, see that it is consistent with the list of equipment in the Permit to Operate and that it has not been altered since the last Permit was issued. If equipment has been modified, look to see if there is an Authority to Construct. A Notice of Violation may have to be issued if procedures regarding permits are not followed.

Confirm with the operator that the heater is being **fired with fuel gas** rather than oils or solids. This is likely to be a permit requirement and can usually be verified by looking at the flame through the observation door.

Inspection of NOx Control Equipment

Many recently constructed or modified heaters are equipped with continuous emission monitors for NOx and this simplifies the inspection considerably. The inspector can verify that the emission concentration in the stack gas is within limits. He/she may also check that the instrument is being calibrated regularly as required.

If a NOx monitor is not installed, it is usually not possible to directly determine NOx emissions unless a source test is conducted. Increasingly, heaters are being required to have heat-traced sample lines from the stack to the ground. These will allow the use of portable analyzers to confirm emission levels. Direct measurement of emissions is, of course, the most effective method of compliance verification.

Often, the best an inspector can do is to verify that the equipment is in operation and is installed properly. In any case, the inspection should continue to include observation of the control equipment. Some suggested procedures for this follow.

Inspection of Low-NOx Burners

If low-NOx burners are required in the Permit to Operate, record the manufacturer and model number of the burners if it is available. Most low-NOx burners will be staged fuel type with two or more fuel inlets, so you should attempt to become familiar with the piping arrangement and air registers. With practice you should be able to differentiate between a conventional pre-mix type burner and a low-NOx burner by looking and asking the appropriate questions.

Using proper precautions, a look inside the fire box through the observation door(s) or window(s) will also be instructive. This is a common procedure when a heater is being started up, tuned, or checked to see that each burner is firing properly. The operator should make a safety check and the operator should open any doors necessary to make the observation. Negative pressure fireboxes will normally have several small doors for viewing the flames. Before opening the observation door on a negative pressure firebox, the operator should first check the draft gauges to be sure that the firebox pressure is indeed negative. A positive pressure would result in hot gases or flames coming out as the door is opened. Normal pressure might be -0.25 to -0.5 inches of water. The

operator might then open the door slowly while protecting himself behind the hinge side of the door. At this point, it is usually safe to look well into firebox at the flames, burners, tubes and refractory. Some facilities may also require face shields. Welder's goggles can also be helpful for discerning the shape of bright flames.

Flames from a **pre-mix burner** with plenty of air are generally short and compact and quite blue. **Low-NOx burners** may have a longer, lazier, blue and yellow flame. The second stage fuel tip can usually be seen as the source of a smaller flame located near the edge of the main burner tip. Fuel oil and diesel usually burn with very bright yellow flames which may be difficult to look at without the help of welder's lenses. Oil flames can often be differentiated from gas flames by the intense yellow light. Use common sense and do not stare at the brightness for too long.

Positive pressure fireboxes will normally have glass windows, perhaps protected by an internal metal door. Viewing through these will normally require fewer safety precautions, but the inspector must still be very aware of the surroundings.

Selective Catalytic Reduction (SCR) of NOx

If the heater is equipped with SCR, begin with an overall scan of the equipment. Recent heater constructions will normally have the SCR unit installed at the base of the stack. Retrofits may have the unit located near the ground with duct-work to route the stack gases through it. Especially with retrofit equipment, verify that the unit is not being bypassed by observing the position of all dampers in the duct-work. Verify that all Permit conditions are being met.

Check to see that the ammonia injection system is intact and confirm that ammonia is being injected into the system. This may require the assistance of an operator. Record the injection rate or record the injector setting for future reference. If instrumentation has been provided to analyze for ammonia slip through the catalyst, record the slip. Record the operating temperature of the unit and verify that it is within the recommended range (typically this is somewhere between 400 °F and 1000 °F.) If the operating temperature is not within the prescribed range, attempt to determine why not. Follow up on this question by talking to the manufacturer, fellow inspectors, district engineers, etc.

Selective Non-Catalytic Reduction (SNCR) of NOx

Check to see that ammonia is being injected into the system, then record the rate or record the injector setting for future reference. If instrumentation has been provided for ammonia slip, record the slip. Record the operating temperature at the point of injection and verify that it is within the recommended range (typically this is somewhere between 1400 °F and 1900 °F.)

Sulfur Oxide (SOx) Emission Inspection

In many cases, a continuous monitor for sulfur or H_2S is required on the fuel gas to all heaters. Generally, light fuel grade gases are sent to a central unit where they are treated to remove sulfur compounds and mixed together to provide a homogenous fuel gas source for all of the refinery heaters. This mixed and treated stream is often equipped with a continuous sulfur monitor to assure compliance with SOx emission regulations.

Record the current sulfur monitor reading and review the data history for sulfur excursions. These values may be found on a recorder chart for the instrument or in a computer database. The unit operator should be able to make this information available. Verify that any excursions were reported properly. Also verify that the instrument is being calibrated periodically as required in 40CFR 60, Appendix F.

To repeat, these QA procedures include:

- daily calibration with two concentrations of span gas
- quarterly auditing of the span gas cylinder
- yearly comparison with source test to determine relative accuracy
- proper recordkeeping of the QA steps taken
- records available for inspection

If for some reason you question the H_2S content of the fuel, a simple test for it can be conducted using a Draeger tube. Be aware of the dangers of H_2S. If the Draeger results are high, borderline, or otherwise inconsistent with the continuous monitor, a sample should be taken for further evaluation.

Visible Emission Inspections

Observe all heater stacks for emissions which would violate the opacity or Ringelmann limitations in your district regulations. Remember, you must be certified to do a visible emissions evaluation. You should have a stop watch or a watch with a second hand and means to determine ambient temperature, wet bulb temperature, and relative humidity.

Smoke from gas-fired heaters is a rather uncommon occurrence, usually resulting from an inadequate supply of oxygen during combustion. Most refinery personnel are trained to report and correct any smoking stacks immediately. If smoking does occur, it is most likely to happen during start-up or for short periods before it is detected and corrected. Most heaters have sufficient instrumentation and controls on excess oxygen and often on carbon monoxide to nearly eliminate smoking under normal circumstances.

Visible Emissions Certification

Check with the California Air Resources Board (CARB) for information on certification at 800-952-5588. The Compliance Division of the CARB trains and certifies government and industry personnel in visible emissions evaluations at its popular "Fundamentals of Enforcement" class which is offered four times a year. Certified personnel are required to recertify every six months in order to demonstrate ongoing evaluation skill.

201.4.3 Post-Inspection Procedures

Prior to leaving the facility, the inspector should evaluate the compliance status of the target equipment and should obtain all the information necessary to complete the inspection form. Make sure you have also acquired all the necessary documents to determine the compliance of the operation.

Appropriate personnel at the facility should be informed of the results of the inspection. They should be advised of any areas of concern where additional information or investigation is needed. Be prepared to make your compliance determinations, calculate excess emissions, and issue necessary violation notices. Be able to document future NOVs which may be pending due to sample results or additional information requests. **Follow up all violations**, according to your district policy, to ensure that the source is brought into compliance.

202 BLOWDOWN SYSTEMS AND FLARES

202.1 INTRODUCTION

The blowdown system and flare may be the most critical components which allow for the safe operation of a petroleum refining operation. They must provide for the safe emergency release and incineration of large quantities of highly flammable gases and liquids.

All process units in the refinery are subject to operational upsets which must be controlled in a safe and effective manner. In emergencies such as power failure, loss of cooling water, instrument failure, etc., vessels containing hot fuels may be subject to high pressures. In order to protect these vessels from overpressure and rupture, which could be catastrophic, each vessel is protected by a safety relief valve which is designed to release fluids from the vessel when the pressure reaches a critical level. In most cases, these fluids are released to the blowdown system, a piping system designed specifically to handle these emergency flows. For smaller releases from relief valves, the released liquids are collected and pumped out for recovery and the gases are compressed and sent to the refinery gas system. If the recovery system becomes overloaded, the fluids are vented at the flare and incinerated.

It is difficult to quantify how much flare emissions contribute to the total pollutant inventory from refineries. It is not possible, for example, to source test a flare to determine emissions of nitrogen oxides (NOx), sulfur oxides (SOx), carbon monoxide (CO), or particulates. And to further complicate the estimation, the flows through the flare are intermittent, although they may be frequent. We do know however that certain facilities, which seem to have frequent and long term flare episodes, are producing a significant amount of pollutants. Most flares are designed to be over 99 percent efficient for burning hydrocarbons to carbon dioxide and so VOC emissions are expected to be limited, except where smoke indicates incomplete combustion.

Since these flare episodes are generally emergency releases, the quality of the gases burned (for example the sulfur content) is often not controlled. Although flare releases are not subject to many of the regulations due to the emergency exemption, flares are emission control devices and as such they must be installed, operated, and maintained according to their design. This is usually spelled out in the Permit to Operate. This section will identify the important characteristics of good flare operation so that poor operation can be identified by the inspector.

202.2 PROCESS AND CONTROL

Fluids routed to the blowdown system can come from several sources. The most important of these sources are of course the **pressure relief** valves from the various units and vessels. In addition, the blowdown system is used for **purging** equipment before cleaning or maintenance. When a vessel or process unit is shut down and being prepared for maintenance or inspection, it is a common procedure to run steam through the system to strip away the hydrocarbons before the system is opened to the atmosphere. This steam and hydrocarbon stream normally flows to the blowdown system where the liquids and gases can be recovered. Other sources which may be vented to blowdown include the **blanket gases** from fixed roof storage tanks or pressure vessels.

The **blowdown system** usually consists of 1) an array of collection piping, 2) a system of vessels, pumps, and compressors for the recovery of liquid and gaseous fuels, and 3) a **flare stack** where excess gases can be safely burned. Figure 202.1 illustrates a typical blowdown / flare configuration. (Please note however that there are many variations in designs for these systems.) The piping delivers any released fluids to a large pressure vessel known as a knockout drum, which is used to separate liquids from gases. The liquids are pumped away, usually to some type of recovered oil tankage. A compressor delivers as much of the gas as possible to the light ends unit, where it is scrubbed to remove sulfur and sent to the fuel gas system. Gases which cannot be recovered are vented up the flare and incinerated.

The compressor and gas recovery system may not be included in all blowdown units. In the past, gas recovery systems were justified only by economics. All relief gases were often sent straight to the flare. There are no regulations which specifically require gas recovery, but some Permits to Operate may include the requirement. The gas recovery system does help minimize emissions from the flare. Often, if the compressor is not operative, flare releases may be nearly continuous, resulting in significant releases of SOx, NOx, and possibly CO, VOCs, and particulates.

When the amount of gases and/or liquids to the blowdown system exceeds the recovery capacity, the system pressure increases and the excess fluids are vented to a flare. The flare is a tall stack with a burner at the tip to incinerate the fluids. The flare is designed to incinerate gases with some entrained liquids but, hopefully, most liquids will be recovered in the knockout drum. Although there

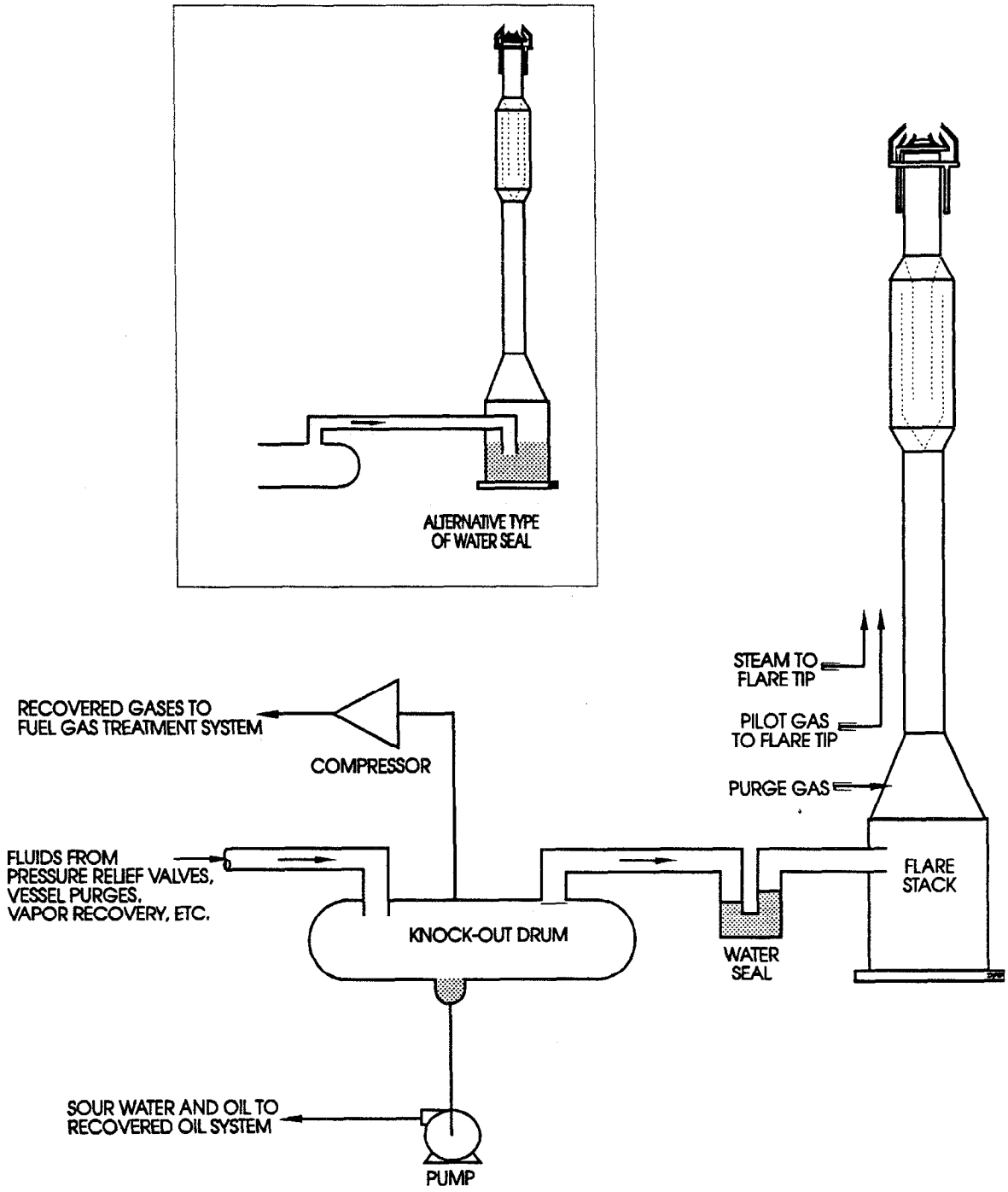

Figure 202.1
Blowdown System with Gas Recovery

are recorded incidents of burning liquids spewing from the flare, it is a rare occurrence. In one such occurrence, hot liquids ran down the sides of the flare and ignited the surrounding grasses. The facility was cited for open burning.

202.2.1 Pollutants

The primary sources of pollution from the blowdown system are the products of combustion at the flare tip. These may include sulfur oxides (SOx), nitrogen oxides (NOx), carbon monoxide (CO), and visible emissions. It is common to have rather high levels of hydrogen sulfide (H2S) in the flare gases. However, since we are usually dealing with emergency releases, the regulations often do not limit the amount of sulfur burned. The SOx emissions can be the source of odor problems and if the odors persist, a public nuisance may result. Also, SOx concentrations at ground level may not exceed California ambient air quality standards (0.05 ppmv for a 24 hour average).

It is not possible to measure the amount of NOx or CO produced at the flare and these emissions are difficult to regulate at this time. Visible emissions (VE or smoke) can usually be controlled during a release and flares generally are subject to the same VE limits as other stationary sources. In general, **breakdown relief** cannot be granted for a smoking flare unless the flare itself or the atomizing steam system has malfunctioned or broken.

As this manual was written, the SCAQMD was implementing the RECLAIM concept where each refinery would be responsible for the sum of all pollutant emissions within its "bubble" of influence. Measuring and accounting for flare emissions is as yet an unresolved issue, but the burden of finding a satisfactory method to estimate these emissions will now be placed on the industry. Consequently, it is likely that in the near future we will have a much better handle on flare emissions than at present.

One promising method for measuring emissions from flares and other sources is Fourier Transform Infrared Spectroscopy or FTIR. This device transmits a beam of infrared light through the exhaust gases and analyzes the spectra of absorbed wavelengths to identify and measure the compounds present. This technology is unproven as yet and district inspectors are encouraged to witness use of the instrument to help determine its utility.

202.2.2 Relief Valve Leakage

Problems with the blowdown system may include continuous leakage through relief valves which could cause continuous emissions. Sometimes these relief valves can fail to reseat after a release, and a leaky valve can be very difficult to detect. This situation is generally controlled by routine maintenance and inspection of the valves. However, removal and testing of the valves can often only be accomplished during a maintenance shutdown. Some leaking valves can be detected by the sound of the fluid flowing through the valve. Other leaks may result in a temperature change (either hot or cold) in the piping immediately downstream of the valve.

202.2.3 Smokeless Flares

When a substantial release occurs, the flare will tend to smoke as large amounts of hydrocarbons, some in the form of mist, are ignited with poor mixing. While pure methane will burn without smoke, heavier hydrocarbons can produce a thick black plume, especially if the flared gases are not well mixed with air as they burn. High-pressure steam is generally added at the flare tip to atomize the hydrocarbon stream and promote mixing with air before ignition. Figure 202.2 represents a common type of flare tip and illustrates the steam injection and pilot gas systems. The steam itself also reacts with the hydrocarbon to reduce smoke. Some methods make use of low-pressure exhaust steam to reduce the amount of high-pressure steam required at the tip.

Because steam is expensive and because of stringent air pollution laws, it is now common to have automatic control of steam injection to the flare. One such method detects the flow of flare gases and adds steam accordingly. Another method is a ground level electric eye which can detect smoke or flame color and adjust the steam rate. These control systems sound simple, but at least one facility has tried both and achieved only limited success. They report that the flow sensing system has had recurring problems and that the ground level eye had a very slow response time.

Some flare stacks have a **mist eliminator** to trap liquid droplets and prevent them from being discharged and burned. The liquids accumulate in the base of the stack and are pumped out to the recovered oil system.

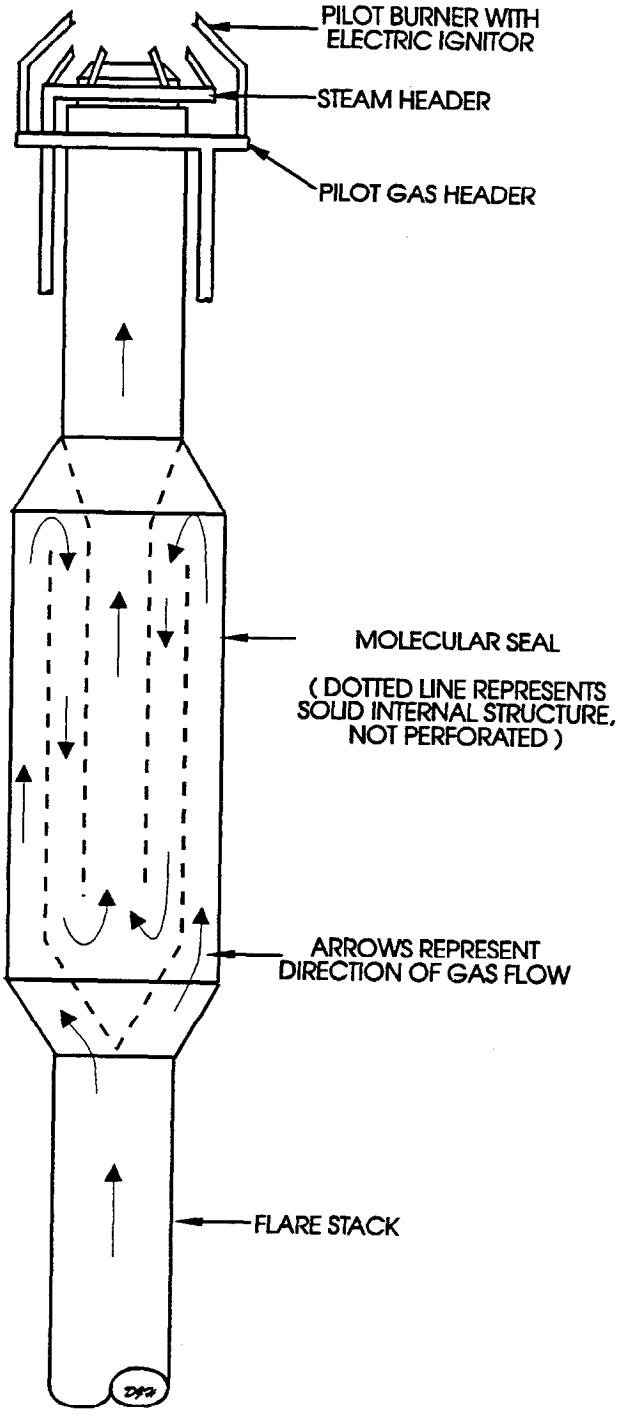

Figure 202.2
Flare Tip and Molecular Seal

202.2.4 Purge Gases

A very dangerous situation can exist if air is allowed to enter the flare while the pilot ignitor is in operation. If the air were to mix with the flare gases, an explosive mixture would be likely to occur and the pilot ignitor is a constant ignition source. Air could enter the stack when the gas density in the stack is less than the density of air, as is the case most of the time when light hot gases are present. Of course this situation must be prevented, so purge gases are used to keep out the air.

Purge gases are generally natural gas, treated (low in H_2S) fuel gas, or nitrogen and are usually added downstream of the water seal. These gases are ignited as they pass the pilot flame and so a small flame is often visible at the flare tip. **Molecular seals** are also often used to help keep out air and reduce the amount of purge gas required. A representative molecular seal is included in Figure 202.2. The molecular seal provides an interruption in the direction of gas flow so that the heavier air cannot rush straight down the stack, replacing the lighter gases. Purge gas is still required with this seal but the flow rate needed is greatly reduced.

202.2.5 Purging for Start-up

After a flare system has been opened to atmosphere for maintenance, safety considerations usually require that the system be purged of air for at least 24 hours before the pilot ignitor can be started. Nitrogen or carbon dioxide can often be used for this purge. Carbon dioxide is heavier than air, which makes it easier to displace the air from the flare stack and drum.

202.2.6 Water Seals

Those blowdown systems which do include a gas recovery system will usually also include some type of water seal to isolate the flare from the blowdown system during quiet periods. The water seal allows a small pressure to be accumulated in the knockout drum. This pressure is then controlled by instrumentation for the gas recovery compressor. The water seal can be an important part of vapor recovery system operation.

The water seal is filled with water and may be in the form of a "gooseneck" (similar to a plumber's "p-trap") as shown in figure 202.1. The seal may also have other configurations and may be located in the base of the flare structure or in the piping leading to the flare. When a hydrocarbon release is greater than the recovery compressor can handle, the water seal is blown out and the system relieves to the flare. When the episode is over, the seal is refilled with water.

Flare systems which do not have a water seal typically require more purge gas to keep air out of the stack and blowdown system. The water seal is also important to the vapor recovery system. For these reasons, proper maintenance and use of the water seal should be encouraged. In many cases, one can observe the liquid level in the sight glass from ground level.

If the water seal is not designed properly, the flare may have a tendency to **surge** during operation. These surges can be relatively violent, rhythmic flow fluctuations which cause pressure surges both upstream and downstream of the water seal. These surges are often easily audible and visible at the flare tip. The surges can also make it extremely difficult to suppress smoke as the flare operates. Water seals which inhibit surges are commercially available.

202.2.7 Pilot Flame Detectors

Most flares are equipped with some type of detector to assure that the pilot light remains lit at all times. This is a requirement for many modern flares or flares serving modern facilities, as discussed in section 202.3.1. These detectors can be in the form of a thermocouple, an infrared optical device, or other suitable instrument.

202.2.8 Flare Height

A primary consideration in determining flare height is that sufficient dilution must occur so that the ground level SO2 level does not exceed the California ambient air quality standard (currently 0.05 ppm for a 24 hr. average). The other factor requiring adequate flare height is the maximum allowable radiant heat at ground level during an emergency flare episode. This is a safety consideration rather than an air pollution concern. The generally accepted maximum is 1000 Btu/sq. ft./hr. as compared to a maximum heat rate from the California sun of just less than 300 Btu/sq. ft./hr.

202.2.9 Fugitive Emissions

As with all process valves, pumps, and compressors, fugitive emissions from leaks are possible. The intermittent and irregular use of this equipment in the blowdown system can make leaks from this equipment even more likely than from equipment that is in continuous use. Please refer to section 301 which discusses the inspection procedure for fugitive emissions.

202.3 RULE DISCUSSION

Blowdown systems and flares are emergency systems and consequently there are few regulations which affect their operation. This section discusses those rules which do limit emissions from, or otherwise affect the operation of, blowdown systems and flares. These rules will include the federal New Source Performance Standards (NSPS), as well as odor, visible emission, and ground level concentration limits found in the district regulations.

202.3.1 40 CFR 60.18

NSPS regulation 40 CFR 60.18 (in Subpart A), General Control Device Requirements, places operating requirements on new or modified flare systems or flares which serve certain new or modified facilities. In general, these requirements are simple. They prohibit smoke, require that the pilot light be continuously lit, and require 95% combustion efficiency. 60.18(d) also requires that the systems be operated in accordance with their designs. This may be interpreted to mean that gas recovery systems must not be shut down, and that liquid pumpouts, water seals, purge gas systems, steam injection, etc. should function adequately. All flares will normally operate within these conditions.

Determining if 40 CFR 60.18 applies to a specific flare is more difficult. Section 60.18 applies only when referred to in one of the other NSPS sections on regulated equipment. For example:

- NSPS Subpart QQQ - Standards of Performance for VOC Emissions from Petroleum Refinery Wastewater Systems, includes Section 60.692-5(c) which references these requirements for flares serving vapor control systems on new wastewater treatment facilities

- NSPS Subpart Kb - Standards of Performance for Volatile Organic Liquid Storage Vessels built or modified after July 23, 1984, includes Section 60.113b(d) which references 40 CFR 60.18 requirements for flares serving new gas blanketed tanks.
- NSPS Subpart GGG - Standards of Performance for Equipment Leaks of VOC in Petroleum Refineries includes Section 60.592(a) which references 40 CFR 60.18 requirements for flares serving closed vent systems (refers to Section 60.482-10).

Similar requirements are included in Subpart NNN, Distillation Operations in the Synthetic Organic Chemical Industry.

Some pertinent sections of 40 CFR 60.18 are repeated below. Quotes from the rule are in italics while this author's notes concerning less important sections are included in regular type for completeness.

60.18 *(a) Introduction. This section contains requirements for control devices used to comply with applicable subparts of parts 60 and 61. The requirements are placed here for administrative convenience and only apply to facilities covered by subparts referring to this section.*

(b) Flares. Paragraphs (c) through (f) apply to flares.

(c)(1) Flares shall be designed for and operated with no visible emissions as determined by the methods specified in paragraph (f), except for periods not to exceed a total of 5 minutes during any 2 consecutive hours.

(c)(2) Flares shall be operated with a flame present at all times, as determined by the methods specified in paragraph (f).

(c)(3) through (c)(6) discuss the heating value of the incinerated gases and the limits on exit velocity at the flare tip. Refinery gases have a high heating value and are allowed a high exit velocity. This issue is usually not of concern to the inspector. This is a design criteria and should be evaluated for the Permit to Construct. In cases where incomplete combustion is suspected, exit velocity may require reevaluation.

(d) Owners or operators of flares used to comply with the provisions of this subpart shall monitor these control devises to ensure that they are operated and maintained in conformance with their designs, Applicable subparts will provide provisions stating how owners or operators of flares shall monitor these control devices.

(e) Flares used to comply with this subpart shall be operated at all times when emissions may be vented to them,

(f)(1) Reference Method 22 shall be used to determine the compliance of flares with the visible emission provisions of this subpart. The observation period is 2 hours and shall be used according to Method 22.

(f)(2) The presence of a flare pilot flame shall be monitored using a thermocouple or any other equivalent device to detect the presence of a flame.

(f)(3) Further discusses calculation of the net heating value of the gas for calculating exit velocities.

202.3.2 California Health and Safety Code

The state of California has a few rules which directly affect flares. Section 41700 of the California Health and Safety Code prohibits emissions which cause a public nuisance (often in the form of odors). Section 41701 places limits on visible emissions (VE) from stacks. In most cases this rule is superseded by more stringent VE rules at the district level.

Abbreviations for Tables 202.1 through 202.3

The following abbreviations are used in Tables 202.1 through 202.3:

BAAQMD - Bay Area Air Quality Management District
CFR - Code of Federal Regulations
CHSC - California Health and Safety Code
EPA - U.S. Environmental Protection Agency
MBUAPCD - Monterey Bay Unified Air Pollution Control District
ppmv - parts per million by volume.
SBCAPCD - Santa Barbara County Air Pollution Control District
SCAQMD - South Coast Air Quality Management District
SJVUAPCD - San Joaquin Valley Unified Air Pollution Control District
SLOCAPCD - San Luis Obispo County Air Pollution Control District

Table 202.1
District Regulations Limiting Visible Emissions (VE)

District	Regulation	Limit
BAAQMD	6-301	< Ringelmann 1 or < 20% opacity
BAAQMD	6-305	No particulates which can be identified individually may fall on another's property and cause annoyance.
SCAQMD	401(b)(1)	< Ringelmann 1 or < 20% opacity
SLOCAPCD	401 A	< Ringelmann 2 or < 40% opacity
SJVUAPCD	4101-5.0	< Ringelmann 1 or < 20% opacity

202.3.3 Regulations Limiting Visible Emissions (VE)

All of the local air pollution districts in California have a visible emissions prohibitory rule. These rules vary in wording, but in almost all cases they express the following:

"...no person shall discharge into the atmosphere from any source whatsoever any contaminant, other than uncombined water vapor, for a period or periods aggregating more than three minutes in any one hour which is:

Table 202.2
BAAQMD Regulations Limiting Odors

Pollutant	Regulation	Limit
Odor	7-302	No odors beyond property boundary which remain odorous after dilution with 4 parts odor free air.
Odor	7-301 and 7-303	Limits emission rates of numerous specific compounds. See regulations.
Public Nuisance	1-301	similar to CHSC rule 41700
SO2	9-301	Limits SOx concentration at ground level to less than California ambient air quality standards. (0.05 ppmv for 24 hr. avg.)

(a) As dark or darker in shade as that designated as No. 1 (or 20% opacity) on the Ringelmann Chart, as published by the United States Bureau of Mines, or
(b) Of such opacity as to obscure an observer's view to a degree equal to or greater than does smoke described in subdivision (a)."

EPA Reference Method 9 describes in detail how such visible emission evaluations should be properly performed, and how to be certified to perform them. The Compliance Division of the CARB trains and certifies government and industry personnel in visible emissions evaluations at its popular "Fundamentals of Enforcement" class which is offered four times a year. Certified personnel are required to recertify every six months in order to demonstrate ongoing evaluation skill. A list of these regulations, the districts in which they apply, and the emission limits, is included in Table 202.1.

Table 202.3 Other District Regulations Affecting Flares		
District	Regulation	Limit
SCAQMD	430(a)	Report any violation which results in a rule violation within 1 hour.
SCAQMD	430(b)	Lists some circumstances where breakdown exemptions apply.
SCAQMD	430(b)(2)	Exemptions may apply if steps are taken to correct the condition leading to the excessive emissions and to minimize the emission itself.

202.3.4 District Regulations Limiting Odors

When faced with an odor source which is causing a public nuisance, most district inspectors will cite California Health & Safety Code (CHSC) Section 41700 which states:

"Except as otherwise provided in section 41705 [agricultural exemptions], *no person shall discharge from any source whatsoever such quantities of air contaminants or other material which cause injury, detriment, nuisance, or annoyance to any considerable number of persons or the public, or which causes or have a natural tendency to cause, injury or damage to business or property."*

The BAAQMD is the only district which has regulations which place specific measurable limits on odorous compounds. A list of these regulations is included in Table 202.1.

202.3.5 District Regulations Affecting Breakdowns

Some districts have special requirements which affect a facility when a breakdown occurs. Breakdown, in this case, refers to an event which results in a rule violation. In many cases, a breakdown will include a significant release to the flare. The facility must then attempt to correct the situation and mitigate the excessive emissions. In the case of flare operation, this may include halting or postponing a vessel purge operation, for example, to minimize the amount of sour gases incinerated at the flare. In general, Breakdown Relief cannot be granted for a smoking flare unless the flare itself or the atomizing steam system has malfunctioned or broken.

There has been at least one case where recurring and similar breakdowns resulting in flare episodes were deemed to be "normal" operation. This was determined to be a change in operation and the facility was required to install additional equipment, in this case, a vapor recovery system for the flare. This may be an enforcement option for serious abusers of the breakdown exemptions.

Some of the regulations affecting breakdowns are listed in Table 202.3.

202.4 INSPECTION PROCEDURES

The following inspection procedures will give you a general description of how to inspect the blowdown systems and flares typically found in a petroleum refinery. Remember, this section is only an outline to provide you with guidance on how to conduct the inspection and what to look for. A copy of the applicable district rules should be placed in Appendix A of this manual in the Legal Requirements. You should refer to your rule for specific requirements for which compliance must be determined. It is important to remember that you represent your agency and have responsibilities and liabilities. Be sure to follow your agency's policies.

202.4.1 Pre-Inspection Preparations

The objective of an inspection is to determine a facility's compliance with district regulations and Permits to Operate. It is important to prepare for the inspection prior to your visit to the site.

File Review

The following file review section follows a sequence similar to that found on the Blowdown System and Flare Inspection Report (Figure 202.3).

Prior to the site inspection, the inspector should review all information available in the district source files including: permit applications, approved permits, equipment lists, conditions for each permit, previous inspection reports, Notices of Violation, breakdown reports, enforcement actions taken, complaints, variance histories, alternative emissions control plans, abatement orders, source tests, processes involved at the facility and emissions inventory.

Plan Ahead

The inspector is encouraged to complete some portions of the inspection documentation before arriving at the facility, as this will save time during the pre-inspection meeting and familiarize one with the facility. If your district has checklists or rule specific forms, use them.

A suggested inspection form for blowdown systems and flares is included in Figure 202.3. The form has been set up with pre-inspection data in the left hand column and the related field-acquired data in the right hand column. Completion of the pre-inspection portion prior to the site visit may help the inspector in the field to quickly determine whether or not the equipment meets the permit and regulatory requirements.

Short summaries of the applicable regulations for blowdown systems and flares are included in section 202.3. Please review your district's regulations and do not assume that the rules included here are up to date or complete. This list of rules is included for guidance and is not intended to be an authoritative list of applicable regulations.

Record the date the flare was built or last modified and compare it to the regulatory exemption dates. This is likely to be a critical piece of information for determining if the NSPS restrictions apply. The NSPS requirements may also be triggered if other new facilities (those subject to NSPS) relieve to the blowdown system or if a diversion connection exists between the subject flare and an NSPS flare. This may require some investigation on the part of the inspector.

List the process units or other facilities which relieve to the flare. Note whether these units are likely to release gases which are high in H2S (such as hydrofining units) or other odorous compounds. This will help you understand the situation in the field if odors or other problems arise.

Determine if there are any ground level monitors in the immediate area which should be observed as part of the inspection. Note the location with respect to the flare and note what compounds are being monitored.

Find out what instrument is used to assure that the pilot is lit and prepare to check it in the field. Also note whether a flow meter/recorder is installed.

Note whether water seal equipment is installed and prepare to inspect the sight glass or other level gauge to make sure that liquid is present in the seal.

Note any Permit conditions regarding the type of purge gas which is being used. Normally this will be either treated fuel gas or natural gas. Prepare to verify this in the field.

Make note of any additional requirements in the Permit to Operate. Also note if any recordkeeping requirements apply and if so, prepare to inspect them.

Regulation Review

You should review any references to the specific rules which are noted in the source files. In particular be familiar with each standard and exemption in the rule. Discuss the regulation with experienced personnel and review any policies your district may have. Make sure that you receive consistent interpretations on how to apply the requirements of the rule.

Equipment Check

Make sure that you have the following equipment available for use during the inspection: vision protection, hearing protection, safety shoes, hard hat, gloves, fire retardant clothing (e.g. Nomex), identification, business cards, pens, wipes, inspection forms, and hydrogen sulfide detector ampoules. Optional equipment

might include a Draeger test pump with detector tubes, or portable analyzers for SOx, O2, H2S and hydrocarbons. Purge gas samples would require a sample cylinder, adapter fittings, and chain of custody forms.

Pre-Entry and Entry

When you arrive at the refinery observe the facility from outside. Try to identify each flare and note the flame size (if any) from each flare. Note any odors or visible emissions and observe the size and layout of the facility. A drive around the perimeter may be useful. Enter the facility through the normal public access and request to see the previous contact person mentioned in the files. Depending on the facility, this may be the environmental coordinator, production manager, supervisor, president, or maintenance worker. Always present your business credentials immediately to avoid confusion.

If the source is unfamiliar with your district's authority, be prepared to cite and provide copies of California Health & Safety Code (CHSC) Section 41510: Right of Entry and Section 42303: Information Required (copies are available in Appendix A). Know and follow your district's policy if the facility refuses entry.

Pre-Inspection Meeting

Before an inspection tour begins, the inspector should meet with the source representative to obtain operating information. The inspector should state the purpose of the inspection and identify the equipment which will be inspected. Facility and equipment information can be verified during this meeting. Record the contact name, title and phone number, as well as the date, time and your own name. Discuss safety procedures and whether or not there are currently any abnormal operations, maintenance, or other concerns.

If you have not already reviewed permits in the pre-inspection, you should request to see a copy of the Permit(s) to Operate for the facility and check to see if the Permit(s) is current and valid. Also, check existing Permit conditions and ask if any changes have been made to the operation which are not reflected in the Permit.

Figure 202.3
Blowdown System and Flare Inspection Form

Pre-Inspection:	Field Inspection:
Facility name:	Date:
Flare ID number:	Inspector:
Permit number:	District:
Permit expiration date:	Facility contact person(s)/title(s):
Facility address:	Is system flaring at this time? When did episode start? Source of release? Visible emissions noted?
Date system was built or last modified:	
Is flare subject to NSPS Regs.?	
Units and processes served by the flare:	Odors noted in area? Description of odor:
Are ground level monitors (GLM's) located nearby? Where? For what Compounds?	GLM Readings:

Figure 202.3 (continued)
Blowdown System and Flare Inspection Form

Pre-Inspection:	Field Inspection:
What device is used to detect pilot flame?	Is pilot flame lit?
Is a flow recorder installed?	Do flows indicate continuous flaring or normal intermittant use?
Is liquid seal installed?	Is liquid seal in use?
Permit conditions for purge gas?	Purge gas source: Purge gas rate:
	Field test results (if any) and method used: H2S in knockout drum: H2S in purge gas: other:
Additional provisions in Permit to Operate:	
Record Keeping requirements:	

202.4.2 Facility Inspection Procedures

The following Facility Inspection section follows a sequence similar to that found on the Gas-fired Heater Inspection Form (Figure 202.3).

Check-in With the Unit Operator

If visible emissions or odors were noted in your overview of the facility, you may wish to investigate them first. Otherwise, proceed to the scheduled operating unit and follow proper check-in procedures. These procedures always require that you obtain permission to enter the unit from the operator in charge, who can usually be found by reporting to the control room. In the case of blowdown systems and flares, the operator in charge may be from the utilities plant, or from a unit which uses the flare, or from some other unit. In any case they will likely not be located too near the flare facility.

In almost all cases, the district inspector will be accompanied by a representative of the company who will follow these procedures. However you should be aware of their procedures and be sure they are followed. Check-in with the unit operator is extremely important to your safety.

Check the Permit to Operate

The inspection is performed by checking the Permits to Operate for each permitted item and making sure the equipment runs in accordance with district regulations. Permits must be posted and they must be current. When you inspect the equipment, see that it is consistent with the list of equipment in the Permit to Operate and that it has not been altered since the last Permit was issued. If equipment has been modified, look to see if there is an Authority to Construct. A Notice of Violation may have to be issued if procedures regarding permits are not followed.

Blowdown System and Flare Inspection Form

The suggested inspection form (Figure 202.3) is included to help the inspector organize the inspection data to be gathered. Having completed the pre-inspection preparation as described in 202.4.1, the corresponding field inspection portion should be completed during the site inspection.

Record the date, time, your name, and the name of the industry representative who accompanies you.

Active Flares

If there is a visible or audible release, attempt to record the flame size (as compared to the molecular seal or the stack diameter.) You may notice that sometimes the flame is invisible. Obtain information as to when the episode started and the source unit for the release. This will be beneficial in building an operating history and will help familiarize you with the system operation. Observe for and record any visible emissions or odors in the area.

Locate the instrument which indicates a pilot flame and confirm that the flame is lit.

If a flowmeter / recorder for released gases is installed, note the current flow rate and inspect the record of past flow rates. Do these flows indicate continuous flaring or normal intermittent (emergency) use? Continuous flaring may indicate that the system is being used for waste gas incineration rather than for real emergencies.

The facts are that most districts do not have rules which apply to waste gas incineration at the flare and few Notices of Violation (NOV's) have been issued for this operation. However, the inspector should be aware when waste gas burning is taking place and should know the source and qualities of the gases being incinerated. When a flare is being used continuously, it is recommended that a gas sample be taken and analyzed for H2S / sulfur compounds and for any other pertinent compounds. If the analysis shows that the operation is a significant detriment to air quality, the district should be able to discourage the operation.

Quiet Flares

If a water seal is installed, determine if it is being filled and operated properly. An empty water seal may adversely affect the vapor recovery system and the purge gas system.

Active and Quiet Flares

Verify the source of purge gas to assure that it has been treated to remove H2S. Record the purge gas rate for future reference. If the purge gas rate is markedly higher than previous readings, try to determine why.

If a flowmeter / recorder for released gases is installed, note the current flow rate and inspect the record of past flow rates. Do these flows indicate continuous flaring or normal intermittent (emergency) use? Please refer to the paragraphs concerning these flows in the Active Flares section.

Inspect any ground level monitors in the area for proper operation. This may include simple observations such as verifying that the pen is inking, the chart is advancing, the instrument appears well maintained, and perhaps other tasks if your experience with instruments permits. Remember your liability and limit yourself to observing the instrument. If you feel any hands-on testing is required, have a company representative perform it.

Make note of any additional requirements in the Permit to Operate. Also note if any record keeping requirements apply and if so, prepare to inspect them.

Visible Emission Inspections

Observe all flare stacks for emissions which would violate the opacity or Ringelmann limitations in your district regulations. Remember, you must be certified to do a visible emissions evaluation. You should have a stop watch or a watch with a second hand and means to determine ambient temperature, wet bulb temperature, and relative humidity.

Visible Emissions Certification

Check with the California Air Resources Board (CARB) for information on certification at 800-952-5588. The Compliance division of the CARB trains and certifies government and industry personnel in visible emissions evaluations at its popular "Fundamentals of Enforcement" class which is offered four times a year. Certified personnel are required to recertify every six months in order to demonstrate ongoing evaluation skill.

202.4.3 Post-Inspection Procedures

Prior to leaving the facility, the inspector should evaluate the compliance status of the target equipment and should obtain all the information necessary to complete the inspection form. Make sure you have also acquired all the necessary documents to determine the compliance of the operation.

Appropriate personnel at the facility should be informed of the results of the inspection. They should be advised of any areas of concern where additional information or investigation is needed. Be prepared to make your compliance determinations, calculate excess emissions, and issue necessary violation notices. Be able to document future NOV's which may be pending due to sample results or additional information requests. **Follow up all violations**, according to your district policy, to ensure that the source is brought into compliance.

203 CATALYTIC CRACKING

203.1 INTRODUCTION

In order to meet the demand for gasoline, it is necessary to convert much of the heavy oil found in crude petroleum into gasoline blend stocks. The majority of these heavy oils are converted using a process unit known as the fluidized catalytic cracking unit (also called the **FCC**, FCCU, or the cat cracking unit). The FCC unit is usually very large and produces a large off-gas stream from the catalyst regeneration process. This regenerator off-gas must be treated before it is released to the atmosphere. Pollutants in this off-gas include particulates (from catalyst fines), nitrogen oxides (NOx), sulfur oxides (SOx), carbon monoxide (CO), and odors (usually a burnt and/or sulfur smell).

The total **emissions** which result from the catalyst regeneration portion of the FCC process are represented in Table 203.1. These emission levels indicate that FCCs are responsible for about 10 to 15 percent of the refinery NOx emissions in both the SCAQMD (South Coast Air Quality Management District) and the BAAQMD (Bay Area AQMD). All of the operating FCCs in California are located in these two air quality management districts. FCCs contribute over 60 percent of refinery SOx emissions in the SCAQMD and over 25 percent of the refinery SOx emissions in the BAAQMD. The difference is due to the presence of several fluidized cokers in the Bay Area which have high levels of SOx emissions. Also, FCCs produce about 20 percent of refining's particulate emissions. Most modern units are not

Table 203.1
Fluidized Catalytic Cracking Unit (FCC) Emissions
1990 Emission Inventory

District	FCC Regenerator Emissions (Tons/year)			
	NOx	SOx	CO	PM
BAAQMD	2720	4460	not available	370
SCAQMD	1220	3160	not available	590
SLOCAPCD	0	0	0	0
SJVUAPCD	0	0	0	0
Total	3940	7620	not available	960

significant carbon monoxide producers and there is evidence that these numbers have not been reported properly. CO emissions are not included in the table.

Two other sources of pollutants are present within the FCC. Valves, pumps, and compressors may be sources of fugitive VOC emissions and inspection of this equipment is discussed in section 301. The FCC may also have one or more gas-fired heaters which were discussed in section 201. Usually gas-fired heaters are used sparingly at the FCC because the heat that they would normally supply is supplied instead by the heat generated in the catalyst regenerator.

This section is designed to help you, the field inspector, to conduct a complete and efficient compliance inspection of the regenerator off-gas treatment portion of the fluidized catalytic cracking unit (FCC). Our goal is to provide a consistent inspection procedure which will vary only slightly from one facility to the next due to variations in the type of equipment in use.

After a short description of how an FCC works and how it relates to the overall refinery operation, we will address how to assure that an FCC unit is in compliance for each of the pollutants of concern.

203.2 PROCESS DESCRIPTION

After the gasoline, kerosene, and diesel are distilled from the crude oil at the crude unit, a large amount of heavy oil remains. These heavy oils are suitable for blending to fuel-oil, which may be used in electric power plants and ships, but fuel-oil brings a relatively low market price. To increase profits, a refinery must usually minimize the production of fuel-oil and maximize the production of gasoline and other more valuable products. The most common method of accomplishing this is the conversion of heavy oils into gasoline and other light products using the fluidized catalytic cracking process. A flow diagram of this process is shown in Figure 203.1.

203.2.1 Gas-Oil Feeds to the FCC

The heavy oils which are most suitable for conversion are those with a boiling range of 600 to 1000 °F. These are collectively known as gas-oils. Individual streams of gas-oil may have more descriptive names which describe the source unit or the properties of the stream. Some of the more common names include:

- atmospheric gas-oil (from the atmospheric crude tower),
- vacuum gas-oil (from the vacuum tower),
- straight-run gas-oil (straight from the crude unit),
- coker gas-oil (from the coker),
- cycle oil (unconverted oil from the FCC),
- light gas-oil (in the lower boiling point range),
- heavy gas-oil (in the higher boiling point range),
- hydrotreated gas-oil (hydrotreated to remove sulfur).

From the air quality inspector's point of view, these oils have a very low vapor pressure and VOC emissions from the pumps and valves which feed the FCC unit will not be a concern. In some cases however, some of the gas-oils can be sour and can be a source of odors.

The quality of the gas-oil feeds to the FCC can often affect the pollutant levels in the regenerator off-gas stream (see section 203.2.4). In particular, a high sulfur level in the feed will normally result in high SOx emissions unless the off-gas is treated to remove the SOx. Similarly, a high feed sulfur will result in a gasoline product which is also high in sulfur. To reduce these sulfur levels, gas-oils can be hydrotreated to remove sulfur prior to cracking at the FCC. In most operations in California, a portion of the gas-oil is hydrotreated in order to keep the sulfur level in the gasoline pool just below the CARB regulated limit. In some instances, more gas-oil must be hydrotreated to meet air emission limits for SOx.

203.2.2 Cracking Reaction

The gas-oil feeds are first heated to about 300 to 400 °F by the hot product streams, using heat exchangers. The feeds then enter the bottom of the reactor riser pipe and are mixed with hot catalyst, fresh from the regenerator. The hot catalyst causes the oils to vaporize and flow up through the riser.

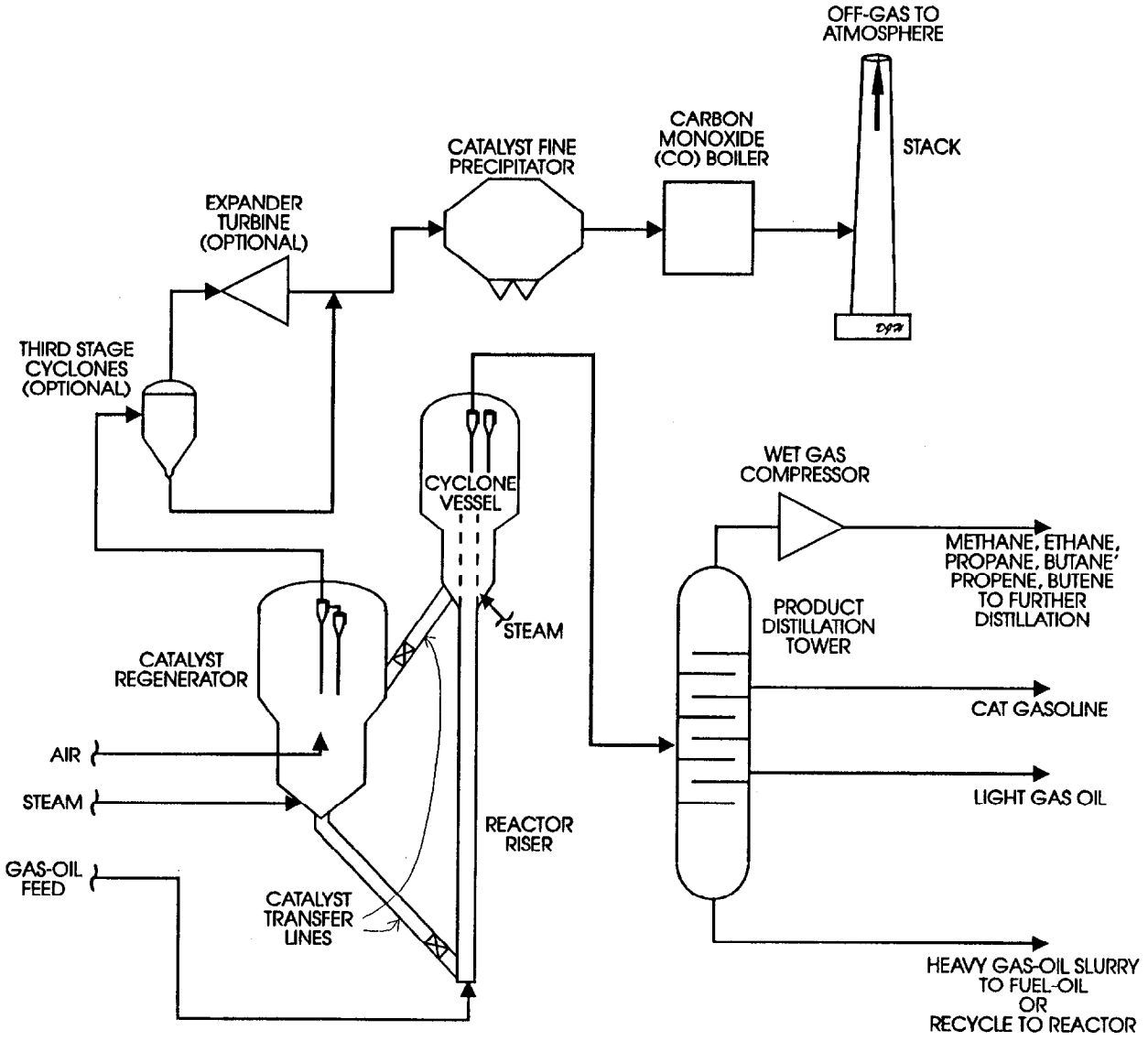

Figure 203.1
Fluidized Catalytic Cracking Unit

The rising gases carry the catalyst particles upward and the particles behave somewhat like a boiling liquid. This boiling flow of catalyst particles is called **fluidization**.

While the oils are in contact with the catalyst, the large oil molecules tend to break apart or "crack" into smaller molecules, such as ethane, propane, propene, butane, butene, gasoline range molecules, and kerosene range molecules. Some of the gas oils remain uncracked or unconverted.

Small hydrocarbon molecules tend to contain a relatively high ratio of hydrogen atoms to carbon atoms as compared to the larger hydrocarbon molecules, such as those in gas-oil. Consequently, as the smaller molecules are formed, the reaction is starved for hydrogen. The result is the formation of molecules with lower hydrogen content. These include **olefins** (unsaturated or double bonded hydrocarbons) and **coke** (elemental carbon).

The coke is formed on the surface of the catalyst particle during the reaction and tends to block the reactive sites on the catalyst. The result is a catalyst which is **spent** (is no longer able to promote the cracking reaction). Also a portion of the sulfur compounds found in the gas-oil feed are deposited on the catalyst. The amount of sulfur deposited is directly related to the amount of sulfur in the gas-oil feed. Some special catalysts can reduce these sulfur deposits by converting some of the sulfur into hydrogen sulfide (H_2S).

From the top of the riser, the cracked hydrocarbons and catalyst enter the **cyclone vessel** portion of the reactor. This section has a much larger diameter and the velocity of fluid flow is greatly reduced. The slow flow allows the spent catalyst particles to settle to the bottom. The cyclones further separate the catalyst from the hydrocarbons and return the catalyst to the bottom of the vessel. The cracked hydrocarbons flow from the cyclones and exit the top of the vessel.

203.2.3 Cracked Hydrocarbons from the Reactor

The hydrocarbons flow from the cyclones of the reactor vessel into the first in a series of distillation towers which separate the cracked products. These products include light gases (methane, ethane, ethene, propane, propene, butane, butene), cat cracked gasoline, cycle oils (gas oils), and slurry oil (heavy cycle oil with suspended catalyst and coke particles).

Methane and ethane are generally sent to the fuel gas system. Propene and butene are fed to the alkylation unit. Cracked gasoline is a good gasoline blend stock. The lighter cycle oils are often sent to a hydrocracking unit. And slurry oil can be recycled to the FCC reactor, blended to fuel oil, or fed to the coker or asphalt plant.

The distillation processes which follow the reactor are typical refinery distillation operations which are normally inspected for fugitive VOC emissions according to the procedures discussed in section 301 of this manual. Of particular interest is a very large compressor, often called the wet-gas compressor, which collects the overhead vapors from the main distillation tower. Failure of this essential compressor will send extremely large amounts of gas to the flare system for incineration. This is one reason that most FCC units have a dedicated blowdown system and flare stack. (Please refer to section 202 for Flare Inspection). If the wet-gas compressor cannot be restarted, then it is likely that the entire FCC unit will be shut down. Some older units may still have a series of gas-fired reciprocating compressors for the wet gas. The gas-fired compressor drivers may be required by Permit to burn natural gas or they may be able to burn fuel gas.

203.2.4 Spent Catalyst Regeneration

As the catalyst settles toward the bottom of the reactor cyclone vessel, it enters the stripping section where steam is injected to strip hydrocarbons from the spent catalyst. From the catalyst stripping section of the reactor, the catalyst flows (like the sands in an hourglass) through a large pipe into the spent catalyst regenerator. In the regenerator, air is blown through the catalyst and the coke carbon deposits are burned off. In addition, sulfur deposits on the catalyst are also burned off. Depending on the amount of sulfur on the catalyst, SOx formation can be substantial.

As with other combustion processes, high temperatures aid the reaction of nitrogen with oxygen to form nitrogen oxides (NOx). Also, as the amount of regeneration air is increased, the peak temperature increases and the formation of NOx increases. FCC regenerator off-gases usually contain a significant amount of NOx. To date, NOx reduction processes such as selective catalytic reduction (SCR) on the regenerator off-gas have seen little use in California. The experimental injection of ammonia or urea into the off-gas has shown some NOx reduction.

In the past, combustion in the regenerator was typically incomplete and carbon monoxide (CO) levels in the off-gas were quite high, up to ten percent CO. In modern practice, most spent catalyst regenerators have been modified to accommodate high temperature regeneration (HTR) which allows complete combustion and produces low levels of CO. Temperature fluctuations in the regenerator do occur and can adversely affect emissions. Changes in feed quality, especially if unexpected, can also upset the operation for a time.

The combustion air to the regenerator is supplied by a very large blower. The blower itself will not have emissions but should the blower fail, it may lead to an emergency shutdown and serious emissions from the FCC unit.

After the coke has been burned off, the catalyst settles to the bottom of the regenerator and flows (again like hourglass sand) through a pipe to the bottom of the reactor riser. The hot catalyst again mixes with fresh gas-oil feed and the fluidized catalytic cracking cycle is continued.

203.2.5 Regenerator Off-gas

The off-gases from the regenerator combustion rise to the top of the regenerator vessel where they enter the first stage of a set of two-stage **cyclones**. The gases are spun around, causing entrained catalyst to be driven to the walls of the cyclone. The catalyst then settles to the bottom of the cyclone and down a pipe to join the rest of the regenerated catalyst at the bottom of the regenerator vessel. The off-gas leaves the top of the cyclones and enters second stage cyclones, where more catalyst is removed similarly. From the top of the second stage cyclones, the off-gas leaves the regenerator vessel.

At this point the off-gas is a very large flow which contains catalyst fines (fragments of catalyst particles), NOx, SOx, and CO, in addition to normal combustion gases (CO_2 , H_2O, N_2 , O_2). These gases are very hot and are sometimes routed through heat exchangers to recover some of the heat, perhaps in the form of steam production.

203.2.6 Regenerator Off-gas Expander Turbine

The pressure in the regenerator must generally be maintained at about 25 psi to keep the catalyst flowing properly through the system. A considerable amount of energy can be recovered by allowing the off-gas to expand through a turbine. The turbine may then drive an electrical generator, or it may help drive the air blower which supplies the regenerator combustion air.

To protect the turbine blades from erosion by catalyst fines, another set of cyclones must be installed for further catalyst fine removal. This set of cyclones is sometimes called the third-stage separator. The fines are separated, the clean gases drive the turbine, and in most cases, the fines are added back to the off-gas stream, downstream of the turbine. In this configuration, the third stage cyclone separator is not a pollution control device because there is no net removal of particulates from the off-gas.

203.2.7 Regenerator Off-Gas Treatment

The regenerator off-gas at this point will contain significant amounts of particulates, NOx, and SOx. In most cases, NOx and SOx emissions can be controlled to within current allowable limits on existing facilities and further treatment of the off-gas to remove NOx and SOx is not required at this time. New facilities however, will trigger best available control technology (BACT) requirements and NOx controls such as selective catalytic reduction (SCR) will probably be required. Further reductions in SOx emissions will probably be accomplished by hydrotreating a larger portion of the gas-oil feed to the FCC and/or by using a SOx inhibiting catalyst.

Particulate levels in the off-gas are high, and off-gas treatment is required to reduce particulate emissions. The catalyst particulates are removed using an electrostatic precipitator. Depending on the facility design, the off-gas may first enter the precipitator or it may first enter a gas-fired boiler, the CO boiler (to be discussed in section 203.2.9). The following discussions will start with the precipitator.

203.2.8 Electrostatic Precipitator

Catalyst fines (dust) are removed from the regenerator off-gas stream by a large piece of equipment known as an electrostatic precipitator (ESP or simply precipitator). The precipitator imparts a negative electrical charge to

the dust particles and the particles are then attracted to and deposited on positively charged collection plates. For a complete discussion of the process and inspection of precipitators, please refer to the CARB manual Electrostatic Precipitators, produced by the Compliance Assistance Program.

The regenerator off-gas leaves the regenerator facilities through a large pipeline, often 36 to 48 inches in diameter and easily distinguishable by its size. It is piped to the precipitator (or to the CO boiler first in some cases) which is often located some distance away, perhaps at the steam generation plant. The off-gas enters the precipitator through an inlet gas distribution chamber, the cone or pyramid shaped chamber on the inlet end (note that there is a similar chamber on the outlet end). The purpose of the distribution chamber is to feed all the gases through the precipitator at the same velocity. That is, the gas velocity should be the same in the center, in the corners, and at the sides of the precipitator vessel.

The off-gas then enters the electrically charged collector section of the precipitator. This section is composed of alternating rows of negatively charged wires and positively charged collector plates. The wires provide electrons to give a negative charge to the dust particles as they pass by. The negative particles are then attracted to and collect on the positive collector plates. One row of collector plates usually consists of three or four plates.

As the particles are accumulated on the collector plates, they form a layer which impedes collection efficiency as the layer thickens. The layer is removed by vibrating the collector plate using a device called a rapper. The rapper is simply an electric hammer which whacks a bar on the top of the plate. The dislodged layer of particles falls into hoppers located in the bottom of the chamber. From the hoppers, the dust is transferred into trucks for disposal.

During the rapping process, some of the dust is reentrained in the gas stream and exits the stack, perhaps producing a puff of smoke. For this reason, the timing of the rapping is critical to the effective operation of the precipitator. A properly designed and operated precipitator should be able to meet both the visible emission limit and the applicable particulate emission limits (please refer to section 203.3.4).

Factors Affecting Collection Efficiency

Several factors can affect the ability of the precipitator to collect particulates. These include the gas velocity and distribution, the voltage between wires and plates, injection of ammonia or urea, rapper timing, the amount of and the properties of the particulates entering the precipitator, and failure of the various precipitator components.

As the volume of gas entering the precipitator increases, the **gas velocity** through the precipitator increases and the residence time within the collection chamber decreases. The faster traveling particles are more difficult to stop and collect. Also there is less time in the chamber for the collection process to take place. **Poor gas flow distribution** can also cause high velocities, normally through the center, and low velocities around the edges. The net effect of poor flow distribution is a reduction in particulate collection efficiency.

The optimal **voltage** is also critical to collection efficiency. The charged area surrounding the negative wires is called the corona and the transfer of electrons through the corona to the particle is known as **corona discharge**. As voltage increases, corona discharge increases until arcing from the wire to the plate becomes excessive and effectively bypasses the particles. The efficiency improves as the voltage increases up to the point that electrical arcing becomes excessive. A low but definite arc rate (usually called the **spark rate**) is associated with maximum effective corona discharge. A spark counter is sometimes used to measure the spark rate and the voltage can be automatically adjusted to maintain the desired spark rate.

The injection of **ammonia** or urea into the regenerator off-gas, upstream of the precipitator, has been found to improve particulate collection in many cases. It is thought that the ammonia increases the ability of a particle to accept and hold an electrical charge. This improves corona discharge and particle collection. The ammonia may also affect the properties of the layer of particles on the collector plates and may help the layer stick together when the plate is rapped and the layer falls into the hoppers at the bottom. The ammonia or urea is also said to react with NOx and cause a small reduction in the concentration.

Obviously, as the load of particulates entering the precipitator increases, the amount which will pass through uncollected will usually also increase. Causes of an increase in **particulate loading** include erosion of the regenerator cyclones. As the particles spin inside the cyclone and scrape against the cyclone walls, the walls can erode, become uneven or even perforated, and the collection efficiency is reduced. High regeneration air rates can also increase the particulate loading to the precipitators. These conditions are more likely late in the FCC maintenance cycle when the catalyst ages, becomes less active and perhaps begins to break apart and form smaller particles (fines). Increasing the FCC feed rate will also increase particulate loading to the precipitator because more regeneration air is needed.

Several precipitator components are prone to failure. The electrode wires can become loose and short out sections of the collectors. Rappers can fail or be poorly adjusted and reduce the collection efficiency of the affected collector plates. And high voltage supply failure can incapacitate the precipitator. The failure of any of these components may result in increased particulate emissions and increased opacity of the effluent gas.

Loading and Unloading Catalyst

Catalyst fines collected by the precipitator are stored in hoppers until they can be emptied into trucks or railcars and hauled offsite, usually as a hazardous waste. This catalyst transfer operation can be prone to causing dust emissions and most facilities have procedures and equipment to minimize dust. These fugitive dust emissions are subject to the same visible emissions limits (usually 20% opacity) as other sources.

Unloading trucks or railcars of fresh catalyst into a storage vessel may also present dust problems. The catalyst is generally transported by fluffing and pushing the catalyst powder with air injection from the truck/railcar to storage. Many of these transfer facilities are equipped with dust abatement facilities such as cyclones, bag filters, and enclosed systems.

203.2.9 CO Boiler

The CO boiler resembles a typical steam generating heater as described in section 201 of this manual. In the past, the carbon monoxide rich off-gas was mixed with fuel-gas and burned with air in this boiler. In this way, the

carbon monoxide was burned as a fuel to form carbon dioxide and to recover the heat as steam, hence the name CO boiler. In most modern FCC regenerators, a process modification called high temperature regeneration (HTR) now results in very little carbon monoxide production. The CO boiler is still used, however, to recover heat from the off-gas by generating steam. The CO boiler may still use fuel gas for auxiliary fuel and may require low-NOx fuel gas burners to meet NOx limits. A CO boiler may also help incinerate aldehydes, ammonia and hydrocarbons from the regenerator that may be in the off-gas. Some facilities are also known to incinerate oily waste materials in the CO boiler.

Soot Blowing

As the dusty off-gas passes through the CO boiler, some of the particulates accumulate on the boiler tubes. This dust buildup inhibits the transfer of heat from the flame to the tube and the boiling water. Heat is then lost out the stack and less steam is produced. Additional fuel must be burned to make up for the lost steam production.

To reduce this loss of heat, the dust must be removed periodically. This is accomplished by blowing the dust off with steam. The process of blowing the dust from the tubes is known as **soot blowing**. As the dust is blown from the tubes, it reenters the gas stream and can often be seen as a puff of smoke from the stack. In most cases, soot blowing can be accomplished fairly quickly without violation of the three-minute limit in the visible emission standards noted in section 203.3.4. The BAAQMD rule 6-304 provides a short term exemption for soot blowing.

203.2.10 Start-up and Shutdown

The normal operating period between maintenance shutdowns for an FCC is about two years. A controlled shutdown is usually accomplished in one day or less and the start-up sequence may last from one to three days. Start-up problems can multiply this period several times.

In some cases, the precipitator and CO Boiler can operate during the start-up and shutdown procedures and emissions should not exceed the normal limits. In other cases though, this may not be possible and a variance for temporary excess emissions may be required.

203.3 RULE DISCUSSION

This section discusses the various rules which limit emissions from the catalyst regeneration process in FCCs (fluidized catalytic cracking units). In many cases, the rules have been written to apply specifically for the FCC facilities. However, there are also several general rules which apply, especially those regulating visible emissions and emissions from boilers.

The section will address some general topics first and then the four primary pollutants from FCC's, namely:

- Particulate Matter and Visible Emissions
- Sulfur oxides, SOx
- Carbon Monoxide, CO
- Nitrogen Oxides, NOx

203.3.1 New Source Performance Standards (NSPS)

The EPA has issued 40 CFR 60, Subpart J, Standards of Performance for Petroleum Refineries. These are known as the New Source Performance Standards (NSPS). Subpart J affects FCC units which were constructed or modified after June 11, 1973, by limiting particulate, SOx, and CO emissions. The air pollution control districts with refineries have also adopted regulations which reflect subpart J.

Although most FCCs were built before 1973, the units may have been modified according to the 40 CFR definition. Section 60.14(a) states "Except as provided under paragraphs (e) and (f) of this section, any physical or operational change to an existing facility which results in an increase in the emission rate to the atmosphere of any pollutant to which a standard applies shall be considered a modification..." Paragraph (e)(1), an exception, refers to routine maintenance. Paragraph (e)(2), another exception, states that the following shall <u>not</u> be considered a modification; "An increase in production rate of an existing facility, if that increase can be accomplished without a capital expenditure for that facility." It is possible that increased production rates have required "modifications" (with capital expenditures) to some FCC's since 1973.

203.3.2 California Health and Safety Code

The State of California has only a few rules which directly affect FCC units. These include Section 41701 of the California Health and Safety Code which places limits on visible emissions (VE) from stacks. In most cases this rule is superseded by more stringent VE rules at district level. These rules also include Section 41700 which prohibits a public nuisance. This section is often cited when odors affect the public.

203.3.3 Continuous Emission Monitors

Normally, the regenerator off-gas stack must be equipped with a continuous emission monitor for opacity and often for NOx, SOx, and CO. The Permit to Operate will usually list requirements for these monitors. Quality assurance (QA) procedures for the acceptable operation of these monitors are found in 40 CFR 60, Appendix F. These QA procedures include:

- daily calibration with two concentrations of span gas
- quarterly auditing of the span gas cylinder
- yearly comparison with source test to determine relative accuracy
- proper recordkeeping of the QA steps taken
- records available for inspection

CARB Method 100, Procedure for Continuous Gaseous Emission Stack Monitoring, provides specific requirements for the sampling methods. Method 100 is a CARB approved alternative to EPA reference methods, in particular EPA Methods 3, 6, 7, and 10.

In some cases, a continuous monitor may not be required and compliance is determined with periodic source tests, conducted by either district specialists or by contracted testers which must be CARB certified. There is also a trend toward the use of portable analyzers if proper stack gas sampling facilities are available. Units for measuring gaseous emission concentrations are generally parts per million by volume (ppm or ppmv).

Abbreviations for Tables 203.2 through 203.8

The following abbreviations are used in Tables 203.2 through 203.8:

BAAQMD - Bay Area Air Quality Management District
CFR - Code of Federal Regulations
EPA - U.S. Environmental Protection Agency
ppm or ppmv - parts per million by volume. Both abbreviations are used because this is how they appear in the corresponding regulations.
SCAQMD - South Coast Air Quality Management District

203.3.4 Limits for Visible Emissions and Particulates

All of the local air pollution districts in California have a visible emissions prohibitory rule. These rules vary in wording, but in almost all cases they express the following:

"...no person shall discharge into the atmosphere from any source whatsoever any contaminant, other than uncombined water vapor, for a period or periods aggregating more than three minutes in any one hour which is:

(a) As dark or darker in shade as that designated as No. 1 (or 20% opacity) on the Ringelmann Chart, as published by the United States Bureau of Mines, or
(b) Of such opacity as to obscure an observer's view to a degree equal to or greater than does smoke described in subdivision (a)."

This rule is particularly applicable to the FCC regenerator off-gas stack where a plume of catalyst dust is usually visible. The BAAQMD rule 6-304 provides a short term exemption for soot blowing, a procedure where steam is used to blow off dust deposits from the heat transfer tubes in the CO boiler.

The state standard for visible emissions (Section 41701, California Health and Safety Code) is No. 2 on the Ringelmann chart, or 40% opacity. EPA Reference Method 9 describes in detail how such visible emission evaluations should be properly performed, and how to be certified to perform them.

The mass emission rate of particulates from FCCs is also regulated by the NSPS and by both the SCAQMD and the BAAQMD. The mass emission rate is determined by a source test, which is required annually in most cases.

The NSPS regulations and the emission limits for visible emissions and for particulates are included in Table 203.2. The district regulations are included in Table 203.3.

Visible Emissions Certification

Check with the California Air Resources Board (CARB) for information on certification at 800-952-5588. The Compliance Division of CARB trains and certifies government and industry personnel in visible emissions evaluations at its popular "Fundamentals of Enforcement" class which is offered four times a year. Certified personnel are required to recertify every six months in order to demonstrate ongoing evaluation skill.

203.3.5 Emission Limits for Sulfur Oxides (SOx)

The NSPS regulations, which apply to facilities built or modified since June 11, 1973, include:

- a limit on the sulfur level in fuel gas burned in a CO boiler,
- add-on SOx control device performance requirements,
- sulfur content limits for the gas-oil feed to the FCC,
- continuous monitor requirements,
- test methods and calculation methods,
- reporting and recording requirements.

These NSPS regulations are listed in Table 203.4. SCAQMD and BAAQMD each have regulations further limiting SOx emissions for all FCC facilities. A list of the district regulations is included in Table 203.5.

203.3.6 Emission Limits for Carbon Monoxide (CO)

The NSPS regulations limit the concentration of CO in the regenerator off-gas to 500 ppmv and require a continuous monitor. NSPS also lists test methods and reporting / recording requirements. These regulations are listed in Table 203.6. District rules governing CO emissions are included in Table 203.7.

Table 203.2
Federal New Source Performance Standards (NSPS)
Limiting Particulate (PM) Emissions

District	Regulation	Limit
All	40 CFR 60.100(b)	NSPS regulations apply to FCC regenerators built or modified after 6-11-1973.
All	40 CFR 60.102(a)(1)	PM < 1 kg per 1000 kg of coke burn-off in regenerator.
All	40 CFR 60.102(a)(2)	Opacity must be less than 30% except for one 6-minute period per hour.
All	40 CFR 60.102(a)(3)	If the CO boiler burns liquid or solid fuel, the PM limit in (a)(1) is increased by 0.10 lb/million Btu of liquid or solid fuel burned.
All	40 CFR 60.105(a)(1)	Continuous monitor for opacity required.
All	40 CFR 60.105(e)(1)	Defines period of excess emissions. "All 1-hour periods that contain two or more 6-minute periods during which the average opacity as measured by the continuous monitoring system under section 60.105(a)(1) exceeds 30 percent.
All	40 CFR 60.106	Lists test methods and procedures.
All	40 CFR 60.107	Reporting and recording requirements.

Table 203.3
District Regulations Limiting Particulate (PM) Emissions

District	Regulation	Limit
SCAQMD	401(b)(1)	< Ringelmann 1 or < 20% opacity
SCAQMD	409	< 0.23 g/dscm or < 0.1 grains/dscf of particulates in the exhaust gases.
BAAQMD	6-301	< Ringelmann 1 or < 20% opacity
BAAQMD	6-305	No particulates which can be identified individually may fall on another's property and cause annoyance.
BAAQMD	6-310	< 343 mg/dscm or < 0.15 grains/dscf of particulates in the exhaust gases
BAAQMD	6-304	< Ringelmann 2 or 40% opacity during tube cleaning. Applies here to CO boilers.
BAAQMD	6-401	Operator shall be able to know the appearance of the stack emissions at all times.
BAAQMD	10-8	Rule 10-8 is similar to NSPS and applies to FCC's and CO boilers built or modified after 6-11-1973

Table 203.4
Federal New Source Performance Standards (NSPS)
Limiting Sulfur Oxide (SOx) Emissions

District	Regulation	Limit
All	40 CFR 60.100(b)	NSPS regulations apply to FCC regenerators built or modified after 6-11-1973.
All	40 CFR 60.104(a)(1)	Shall not burn any fuel gas with H2S above 230 mg/dscm (0.10gr/dscf). Applies here to CO boilers.
All	40 CFR 60.104(b)(1)	Any add-on SOx control device must reduce SOx emissions by 90% or to less than 50 ppmv.
All	40 CFR 60.104(b)(2)	Without an add-on SOx control device, SOx emissions must be less than 9.8 kg per 1000 kg of coke burn-off or (b)(3).
All	40 CFR 60.104(b)(3)	Without an add-on SOx control device, fresh feed to FCC must be less than 0.30 % sulfur by weight.
All	40 CFR 60.104(c)	(b)(1), (b)(2), and(b)(3) are determined daily as a rolling seven day average.
All	40 CFR 60.105(a) (8), (9), (10)	Continuous SOx monitor required if add-on SOx control device is installed.
All	40 CFR 60.106	Lists test methods and procedures.
All	40 CFR 60.106(b)(3)	Calculation for coke burn-off rate.
All	40 CFR 60.107	Reporting and recording requirements.

Table 203.5 District Regulations Limiting Sulfur Oxide (SOx) Emissions		
District	Regulation	Limit
BAAQMD	9-1-310.1	< 1000 ppmv SO2 emissions
BAAQMD	10-8-303	Similar to NSPS requirements
SCAQMD	1105(a)(2)	< 132 lbs. SO2 per 1000 barrels of FCC feed; to be reported monthly.
SCAQMD	2000 thru 2015	Rule 1105 will be replaced by RECLAIM rules for many facilities.

Table 203.6 Federal New Source Performance Standards (NSPS) Limiting Carbon Monoxide (CO) Emissions		
District	Regulation	Limit
All	40 CFR 60.100(b)	NSPS regulations apply to FCC regenerators built or modified after 6-11-1973.
All	40 CFR 60.103(a)	Less than 500 ppmv CO, dry.
All	40 CFR 60.105(a)(2)	Continuous CO monitor required.
All	40 CFR 60.105(e)(2)	Defines period of excess emissions. "All 1-hour periods during which the average CO concentration as measured by the CO continuous monitoring system under section 60.105(a)(2) exceeds 500 ppm."
All	40 CFR 60.106	Lists test methods and procedures.
All	40 CFR 60.107	Reporting and recording requirements.

Table 203.7 District Regulations Limiting Carbon Monoxide (CO) Emissions		
District	Regulation	Limit
BAAQMD	10-8-301	Less than 500 ppmv CO, dry.
SCAQMD	407(a)(1)	Less than 2000 ppmv CO, dry.

203.3.7 Emission Limits for Nitrogen Oxides (NOx)

The NSPS regulations do not limit NOx emissions at this time. Both the SCAQMD and BAAQMD consider the CO boiler as a typical steam generating heater with respect to NOx emissions and the CO boiler must meet similar emission standards. The applicable district rules are listed in Table 203.8.

203.4 INSPECTION PROCEDURES

The following inspection procedures will give you a general description of how to inspect the regenerator off-gas treatment systems of FCCs (fluidized catalytic cracking units) typically found in a petroleum refinery. Remember, this section is only an outline to provide you with guidance on how to conduct the inspection and what to look for. A copy of the applicable district rules should be placed in the appendix. You should refer to your rule for specific requirements for which compliance must be determined. It is important to remember that you represent your agency and have responsibilities and liabilities. Be sure to follow your agency's policies.

A complete inspection of an FCC unit would include inspection of valves, pumps, and compressors for fugitive VOC emissions and inspection of any fired heaters for NOx, SOx, and CO emissions. Inspection for fugitive emissions is discussed in detail later in section 301 of this manual. Inspection of fired heaters was discussed in section 201.

Table 203.8
District Regulations Limiting Nitrogen Oxide (NOx) Emissions

District	Regulation	Limit
BAAQMD	9-3-301	< 175 ppm NOx in stack-gas for CO boilers rated above 1.75 billion Btu/hr.
BAAQMD	9-3-303	< 125 ppm NOx in stack-gas for CO boilers built or modified after 4-19-'75 and rated above 250 million Btu/hr.
SCAQMD	429	exemptions from rule 1109 during startup and shutdown.
SCAQMD	1109(b)(1)(A)	"For the purposes of this rule, the nitrogen oxides formed in the fluid catalytic cracking unit regenerator shall be assumed to be from the burning of gaseous fuel."
SCAQMD	1109.b.1.B.i	36% of heaters (by heat input) are limited to 0.03 lb NOx /million Btu. Remainder of heaters must average 0.14 lb NOx /million Btu. Subject to Alternative Emission Control Plan (AECP). "Heaters" will include CO boilers.
SCAQMD	1109.b.1.B.ii effective 12-31-95	< 0.03 lb/million Btu or approximately 25ppm for all heaters, including CO boilers. Or as specified in AECP.
SCAQMD	2000 thru 2015	Rule 1109 will be replaced by RECLAIM rules for many facilities.

203.4.1 Pre-Inspection Preparations

The objective of an inspection is to determine a facility's compliance with district regulations and Permits to Operate. It is important to prepare for the inspection prior to your visit to the site by reviewing these regulations and Permits.

File Review

Prior to the site inspection, the inspector should review all the information available in the district source files. This information may include: approved permits, equipment lists, conditions for each permit, previous inspection reports, Notices of Violation, breakdown reports, enforcement actions taken, complaints, variance histories, alternative emissions control plans, abatement orders, source tests, processes involved at the facility and emissions inventories.

Regulation Review

You should review any references to the specific rules which are noted in the source files. In particular be familiar with each standard and exemption in the rule. Discuss the regulation with experienced personnel and review any policies your district may have. Make sure that you receive consistent interpretations on how to apply the requirements of the rule.

Pre-Inspection, Left Column

The inspector is encouraged to complete some portions of the inspection documentation before arriving at the facility, as this will save time during the inspection and will familiarize one with the facility. If your district has checklists or rule-specific forms, use them.

A suggested inspection form for FCCs is included in Figure 203.2. The form has been set up with pre-inspection data in the left column and the related field acquired data in the right column. Completion of the pre-inspection portion prior to the site visit may help the on-site inspector to more quickly determine whether or not the equipment meets requirements.

Short summaries of the district and federal regulations for FCCs are included in Tables 203.2-203.8. Please review your district's regulations and do not assume that the tables included here are up to date or complete. These tables are included for guidance and comparison and are not intended to be an authoritative list of applicable regulations.

Check for exemptions. Record the date the FCC was built or last modified and compare it to the regulatory exemption dates. This is likely to be a critical piece of information for determining if the NSPS standards apply and what the other emissions limits are. This date will also help confirm what auxiliary equipment was required under the New Source Review (NSR) rule at the time of construction. In general, best available control technology (BACT) requirements are included as a part of the permit conditions.

Determine the limits allowed for NOx, SOx, CO, and visible emissions in the regenerator off-gas stack effluent and note whether continuous monitors are required for any of these pollutants. If a continuous emissions monitor is required, note the required frequency for instrument calibration and testing (as discussed in section 203.3.3.)

Note the date of the latest source test and the test results. The test history, depending on whether it is good or marginal, will help you to determine when another source test may be required. Please note that all source testers must be evaluated and certified by CARB. For comparison, list the applicable emission limits according to your district's regulations and the Permit to Operate. If the source gave marginal results for one or more pollutants, you may wish to make use of portable test equipment for a rough evaluation.

Examine the Permit to Operate for specific equipment requirements such as electrostatic precipitators, CO boilers, and possibly NOx and/or SOx control devices. The Permit also may have requirements for the operating parameters (voltages, temperatures, etc.) of the emission control equipment.

Reactor / Regenerator Constraints

Determine if any gas-oil feed constraints exist in the Permit or in the regulations. These constraints may include the total gas-oil sulfur content or the reactor feed rate. Record any limits for verification in the field.

Figure 203.2
Fluidized Catalytic Cracking Unit (FCC) Inspection Form

Pre-Inspection:	Field Inspection:
Facility name:	Date/Time:
FCC unit ID number:	Inspector:
Permit number:	District:
Permit expiration date:	Facility contact person(s)/title(s):
Facility address:	Telephone:
	Visible emissions noted?
Date system was built or last modified:	Opacity as determined by Method 9
Is unit subject to NSPS Regs.?	
Applicable stack emission limits. Opacity: Particulates: CO: SOx: NOx: Are CEM's required?	CEMs in operation? Are CEMs calibrated daily? Opacity monitor reading: CO: SOx: NOx: Field test results (if any) and method used:
Date of latest source test. Results:	Excessive odors noted in area? Description of odor:

Figure 203.2 (continued)
Fluidized Catalytic Cracking Unit (FCC) Inspection Form

Pre-Inspection:	Field Inspection:
Reactor / Regenerator Operation	
Rated gas-oil feed capacity: Feed sulfur limit: Permit conditions:	Gas-oil feed rate: Feed weight % sulfur: Regenerator air rate: Regenerator outlet flow rate: Regenerator outlet % CO2: Regenerator outlet % CO: Regenerator outlet % O2: Coke burnoff rate:
Electrostatic Precipitator (ESP) Operation	
Number and type of ESP's at the facility: Configuration (parallel or series): Permit conditions:	Collector voltage: Rapper timing: arc (spark) rate: Evidence of corrosion or wear: Surface skin leaks: Housekeeping around hoppers and dust removal area:
CO Boiler Operation	
Auxililiary fuel type: Aux. fuel sulfur limit: Are other materials incinerated in CO boiler? Permit conditions:	Aux. fuel use rate: Aux. fuel sulfur content: Temp. of gas entering boiler: Combustion Temp. in boiler: CO level out (ppmv):
Additional provisions in Permit to Operate:	
Record keeping requirements:	

Electrostatic Precipitators

Determine the number of precipitators in the off-gas system to be inspected. Are these to be operated in series or parallel or is it adequate to keep one down and one on standby? Is historical data available to tell you what values to expect for the voltages, currents, spark rates, or rapper timings for verifying normal operation?

CO Boiler

If auxiliary fuel is used to fire the CO boiler, note the type of fuel used and the fuel sulfur limit. Does the Permit allow the incineration of other low Btu or waste materials in the boiler? If so, what are the Permit conditions for this operation?

Equipment Check

Make sure that you have the following equipment available for use during the inspection: vision protection, hearing protection, safety shoes, hard hat, gloves, fire retarding clothing (e.g. Nomex), identification, business cards, pens, wipes, inspection forms, and hydrogen sulfide detector ampoules. Optional equipment might include a Draeger test pump with detector tubes, or portable analyzers for NOx, SOx, CO, O2, H2S and hydrocarbons. Gas samples would require sample cylinders, adapter fittings, and Chain of Custody forms. Respiratory protection may be advisable when taking gas samples.

Pre-Entry and Entry

When you arrive at the refinery, observe the facility from outside. Note any odors or visible emissions and note the size and layout of the facility. If possible, locate and observe the off-gas stack for emissions which would violate the opacity or Ringelmann limitations. A drive around the perimeter of the refinery may be useful. Enter the facility through the normal public access and request to see the previous contact person mentioned in the files. Depending on the facility, this may be the environmental coordinator, production manager, supervisor, president, or maintenance worker. Always present your business credentials immediately to avoid confusion.

If the source is unfamiliar with your district's authority, be prepared to cite and provide copies of California Health & Safety Code (CHSC) Section 41510: Right of Entry; and Section 42303: Information Required. Know and follow your district's policy if the facility refuses entry.

Pre-Inspection Meeting

Before an inspection tour begins, the inspector should meet with the source representative to obtain operating information. The inspector should state the purpose of the inspection and identify the equipment which will be inspected. Facility and equipment information can be verified during this meeting. Record the contact name, title and phone number, as well as the date, time, and your own name. Discuss safety procedures and whether or not there are currently any abnormal operations, maintenance, or other concerns.

If you have not already reviewed the Permit to Operate in the pre-inspection, you should request to see a copy of the Permit(s) for the facility and check to see if the Permit(s) is current and valid. Also, check existing Permit conditions and ask if any changes have been made to the operation which are not reflected in the Permit.

203.4.2 Facility Inspection Procedures

The following Facility Inspection section follows a sequence similar to that found on the Fluidized Catalytic Cracking Unit Inspection Form (Figure 203.2).

Check-in with the Unit Operator

If visible emissions or odors were noted in your overview of the facility, you may wish to investigate them first. Otherwise, proceed to the FCC unit and follow proper check-in procedures. These procedures always require that you obtain permission to enter the unit from the operator in charge who can usually be found in the control room. In almost all cases, the district inspector will be accompanied by a representative of the company who will follow these procedures. However, you should be aware of their procedures and be sure they are followed. Check-in with the unit operator is extremely important to your safety.

Visible Emission Inspections

Observe the off-gas stack for emissions which would violate the opacity or Ringelmann limitations in your district regulations. It is important to get a documented visible emissions observation prior to seeing the opacity meter. This will prevent the inspector from being influenced by the meter reading, which could be erroneous. Inquire as to when soot-blowing or rapper operation is scheduled. You may want to determine the effect of these operations on visible emissions.

Remember, you must be certified to do a visible emissions evaluation (check with the California Air Resources Board (CARB) for information on certification at 800-952-5588). You should have a stop watch or a watch with a second hand and means to determine ambient temperature, wet bulb temperature, and relative humidity.

Check the Permit to Operate

The inspection is performed by checking the Permits to Operate for each permitted item and making sure the equipment runs in accordance with permit conditions and district regulations. Permits must be available for inspection and they must be current. When you inspect the equipment, see that it is consistent with the list of equipment in the Permit to Operate and that it has not been altered since the last Permit was issued.

A common alteration which can be easily verified is the replacement of original equipment with that of a higher horsepower rating. Horsepower ratings of pump and compressor drivers are normally included on the Permit. If equipment has been modified, look to see if there is an Authority to Construct. A Notice of Violation may have to be issued if procedures regarding Permits are not followed.

Inspection Form

The suggested inspection form (Figure 203.2) is included to help the inspector organize the inspection data to be gathered. Having completed the pre-inspection portion as described in section 203.4.1, the corresponding field inspection portion should be completed during the site inspection.

Record the date, time, inspector's name, and the name of the industry representative who accompanies you.

Note any excessive odors in the area, especially those which can still be detected a short distance downwind of the unit. The FCC can be a smelly unit and some experience will be required to determine when a problem may have occurred. Remember that H2S is a dangerous gas so use caution if you attempt to sniff out odor sources.

Confidential Data

Please note that many types of operational data are considered confidential by refinery personnel. Petroleum refining is a very competitive business and it would be an unfair advantage for a refiner to learn how his competitors operate or solve problems by way of an air pollution control agency. Flow rates, operating temperatures and pressures, type of catalyst used, etc. may be considered confidential. But flow rates, temperatures, and pressures may also be necessary for the proper evaluation of an emission source or an emission control device.

Normally, when a refiner provides data which is confidential, she indicates the confidentiality and the data is labeled as such. The data is then handled with proper care. If a public information request is made for the data, the refiner is then notified and permission for disclosure is asked, and may or may not be granted. Legally, of course, this subject is more complicated and is addressed in the California Code of Regulations (CCR), Title 17, Sections 91000 - 91022, Disclosure of Public Records.

Please note: **Emission data shall not be considered as confidential.**

Reactor / Regenerator

Record the gas-oil feed rate and the sulfur content of the feed and compare with any limits found in the Permit or in the regulations. Record the regenerator air rate, the regenerator outlet off-gas flow rate, and the concentrations of CO_2, CO, and O_2 in the off-gas. These values are necessary to determine the coke burn-off rate (as required in the NSPS) and to determine the mass rate of emissions at the stack (for comparison with the reported emissions inventory).

Electrostatic Precipitators

Observe the equipment for evidence of corrosion or wear, surface skin leaks (signs of dust or smoke), and general housekeeping in the area. Record your observations. Note how many precipitators are in operation and whether they are being operated in series or parallel. Record the secondary voltage (the corona wire voltage), the spark rate, the secondary current, and the rapper timing for each section of the precipitator. If possible, compare these with historical values for evidence of normal operation.

CO Boiler

Observe the flames to assure that the unit is in operation. Determine if an auxiliary fuel is being burned and if so, record the type of auxiliary fuel in use, the fuel use rate, and the fuel sulfur content. Record the temperature of the gas entering the boiler, and the temperature within for evidence of proper incineration of the CO. Record the level of CO in the outlet gas. Note whether other low Btu or waste materials are being incinerated in the boiler. If so, what are the Permit conditions for this operation?

Continuous Emission Monitor Inspection

In most cases, continuous emission monitors (CEMs) for opacity and CO are required on the off-gas stack. CEMs may also be required for NOx and SOx.
Ask to see the instruments themselves and observe their condition. Do the instruments appear to be well maintained or do they appear to have been ignored? Are there any obvious loose wires or tubes which might indicate that the instrument is not operational? Also verify that the instrument has been properly calibrated (as discussed in section 203.3.3) Daily calibrations should be apparent on the chart and the chart paper should have the proper range for the application.

Record the monitor reading and compare it to the applicable limit. Review the data history for excursions. This may be found on a recorder chart for the instrument or in a computer database. Any excursions should probably have triggered reporting requirements.

203.4.3 Post-Inspection Procedures

Prior to leaving the facility, the inspector should evaluate the compliance status of the target equipment and should have obtained all the information necessary to complete the inspection form. Make sure you have also acquired all the necessary documents to determine the compliance of the operation.

Appropriate personnel at the facility should be informed of the results of the inspection. They should be advised of any areas of concern where additional information or investigation is needed. If warranted, give a Notice of Violation (NOV) as soon as possible. Be prepared to make your compliance determinations, calculate excess emissions, and issue necessary violation notices. Be able to document future NOVs which may be pending due to sample results or additional information requests. Follow up all violations, according to your district policy, to ensure that the source is brought into compliance.

204 SULFUR RECOVERY UNITS

204.1 INTRODUCTION

Most crude oils, especially California crudes, contain a significant amount of sulfur which must be removed during the refining process. Much of the sulfur is converted to hydrogen sulfide (H_2S) during the hydrotreating process and the H_2S is removed and sent to the Sulfur Recovery Unit (also known as the **SRU** or sulfur plant) where it is converted into elemental sulfur and trucked away in liquid form. Some of the H_2S may also be used to produce sulfuric acid (H_2SO_4), usually at a separate unit.

The emissions of concern from a sulfur recovery unit are primarily sulfur dioxide (SO_2), H_2S from the tail gas treatment system and any fugitive H_2S or SO_2 emissions. Both of these pollutants are quite odorous and can usually be detected by smell.

This section is designed to help you, the field inspector, to conduct a complete and efficient compliance inspection of a sulfur recovery unit. Our goal is to provide a consistent inspection procedure which will vary only slightly from one facility to the next due to changes in the type of equipment in use.

After a short description of how a sulfur plant works and how it relates to the overall refinery operation, we will address how to assure that a sulfur recovery unit is in compliance for each of the pollutants of concern.

204.2 PROCESS AND CONTROL

204.2.1 Role of the Sulfur Recovery Unit

Crude oils which contain relatively high amounts of sulfur are called **sour crudes**. Most California crudes, both inland and offshore, are included in this category. Refineries which can process sour crudes must be designed with special consideration for the sulfur. Not only must the sulfur recovery unit have a large capacity, but each process unit must be evaluated for the corrosive properties of sulfur compounds, and for sulfur removal capacity.

Crudes with very little sulfur are called **sweet crudes**. Sweet crudes are generally more expensive because they do not require as much of the sulfur related facilities. However, even sweet crudes do contain some sulfur which must be removed. In almost all cases, a sulfur recovery unit is required.

Sulfur is distributed throughout the crude oil; that is, it is present in the light ends, in the naphtha (gasoline range), in the diesel, and in the heavy fuel oil portions. During a simple distillation at the crude processing unit, most of the sulfur will be found in the heavy fuel oil streams. As the streams become lighter and more volatile, the percentage of sulfur will also decrease. A significant amount of sulfur remains in the overhead gases in the form of H_2S or **mercaptan** (a hydrocarbon with an H-S ion attached).

California and district regulations limit the sulfur content allowed in almost every type of fuel burned here. Fuel oils, diesel, jet fuel, gasoline, butane, propane, and fuel gases all have sulfur limits. Consequently, with the exception of only the sweetest of crudes, sulfur must be removed from nearly every portion of the crude oil.

204.2.2 From Petroleum Sulfur to Hydrogen Sulfide (H_2S)

Sulfur is liberated from the petroleum in the form of H_2S or mercaptan in both the distillation and cracking processes. Most of the remainder of the sulfur is converted to H_2S by the hydrotreating process. In the hydrotreating process, the oils are heated and mixed with hydrogen (H_2) in the presence of catalyst. The sulfur (S) in the oils combines with the H_2 to form H_2S and is then removed with the light gases. Hydrotreating is the method designed specifically to remove sulfur and nitrogen from hydrocarbon streams which are to be reformed or cracked by precious metal catalysts. The sulfur and nitrogen will deactivate the catalyst if not removed. Hydrotreating is now being used to remove sulfur (especially from diesel) for purely environmental reasons.

204.2.3 Fuel gas Scrubbing

H_2S is usually produced along with a stream of light gases such as methane, ethane, propane, etc. These gases are then "scrubbed" using an **amine** solution which absorbs the H_2S. The amine used is generally **MEA** (monoethanolamine) or **DEA** (diethanolamine).

In the sulfur removal process, gases rich in H_2S (sour gases) flow upward through a vertical tower where the gases are contacted with the H_2S absorbing amine solutions. The amine solution flows downward through the vessel across trays or packing, which distribute the solution and improve contact between the liquid and gas. The H_2S-rich amines are then usually pumped from the bottom of the tower to the sulfur plant where the H_2S is removed by steam stripping. The stripped amines (lean amines) are then recycled back to the H_2S absorption towers. The H_2S-rich gases which were stripped from the amine are then converted to elemental sulfur at the sulfur recovery plant. These H_2S-rich gases are often called **acid gases**.

The sulfur recovery system is subject to upset conditions, as are all process units. Upset of any of the H_2S absorption towers can result in high H_2S levels in the entire refinery fuel gas system. Other causes of high levels of H_2S in the fuel gas include contamination of the amine solution with water (amine cooler leak) or salts (of amine oxidation) as well as pump failures, etc.

204.2.4 Sour Water Stripping

Water and steam are also introduced in many refinery processes and come into contact with sour oils and gases. The water or steam condensate can also absorb H_2S and this sour water must also be stripped before being dumped to the drain. The H_2S from the stripping of sour water often contains a high concentration of ammonia and this stream is usually handled separately.

Often the H_2S - NH_3 stream from the water strippers is burned first in a separate combustion chamber with a slight excess of air. The oxidizing environment and the temperature favor the conversion of NH_3 to nitrogen (N_2). This reduces the formation of ammonium-sulfur salts which can plug the system. A portion of the primary H_2S stream is then burned to achieve the appropriate ratio of SO_2 to H_2S for the Claus reaction.

204.2.5 Claus Process (Conversion of H_2S to Liquid Sulfur)

The H_2S-rich gases are typically converted to elemental sulfur (S) by the Claus process as illustrated in Figure 204.1. First, one third of the H_2S is burned, limited by air supply, in a furnace to form SO_2. Second, the SO_2 and remaining H_2S enter a reactor where they form water (H_2O) and sulfur (S). The following equations illustrate these reactions.

$$2\ H_2S + 3\ O_2 = 2\ SO_2 + 2\ H_2O$$
$$2\ H_2S + SO_2 = 3\ S + 2\ H_2O$$

The sulfur vapors are cooled in a condenser (usually a steam generator) and the liquid sulfur flows to a sulfur pit. The unreacted gases enter a series of reheaters, reactors, and condensers (usually three stages) to complete the reaction. The liquid sulfur from each of the condensers flows to the sulfur pit.

The unreacted gases which leave the third condenser are called the tail gases. They will include H_2S, SO_2, and elemental sulfur. In most cases, these will require further treatment for sulfur removal before they can be discharged. There are several methods used for the final tail gas treatment and we will briefly discuss here the three most commonly used in California.

204.2.6 Beavon Stretford Tail Gas Cleanup

The Beavon Stretford process is represented by Figure 204.2. Fuel gas and a small amount of air are combusted in a reducing gas generator to form hydrogen (H_2) and carbon monoxide (CO). These two reducing gases are then mixed with the Claus tail gas and sent to a catalytic reactor where all of the sulfur compounds are reduced to H_2S. The H_2S is then absorbed in Stretford solution (an aqueous solution of sodium metavanadate, $NaVO_3$) where it reacts to form a froth of elemental sulfur particles. The froth is then washed and melted and usually drains back to the sulfur pit but may be disposed of due to impurities. The Stretford solution is regenerated by being oxidized with air.

The top of the Stretford absorber usually appears as a tall stack and the scrubbed tail gases are emitted directly to the atmosphere, although they may be incinerated first. The exhaust gases will contain a small amount of H_2S and carbonyl sulfide (COS) if not incinerated. Incinerated gases will contain SO_2.

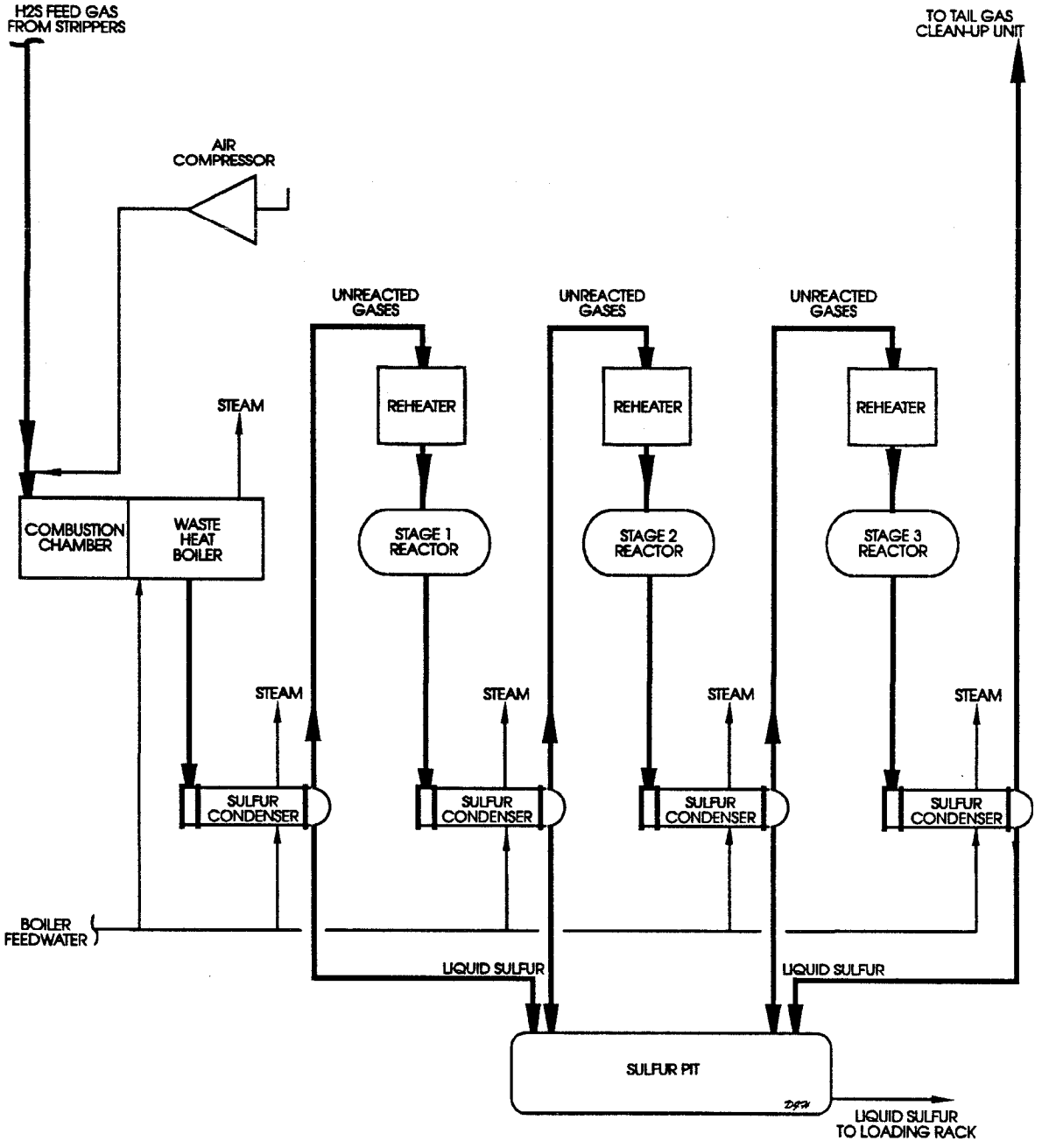

Figure 204.1
Claus Sulfur Recovery Unit

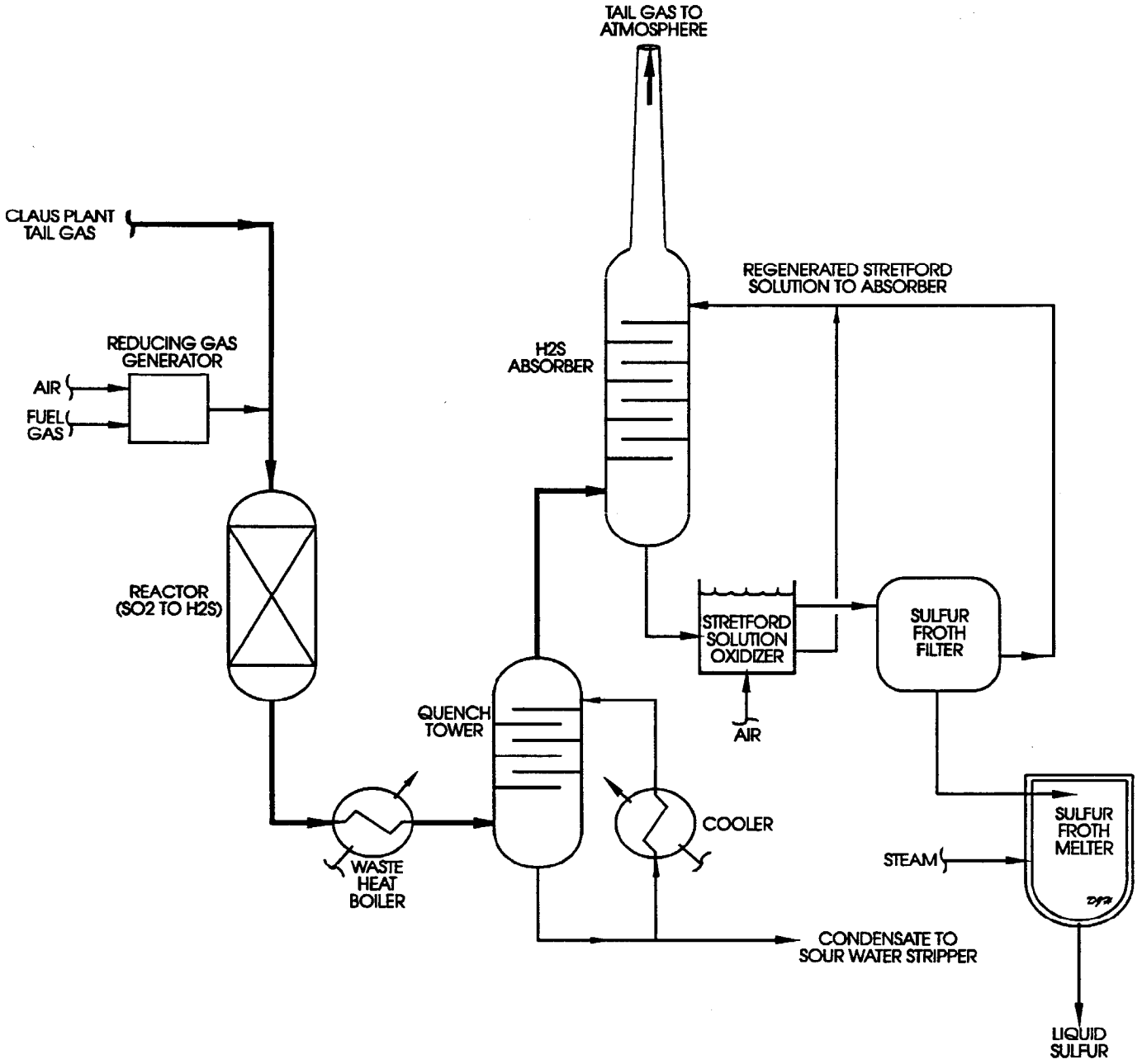

Figure 204.2
Beavon Tail Gas Clean-Up Process

The Beavon Process was developed jointly by the Ralph M. Parsons Co. and Unocal Corp. and is licensed by Unocal.

204.2.7 SCOT Tail Gas Cleanup Process

The SCOT Process is represented by Figure 204.3. As in the Beavon Process, fuel gas and a small amount of air are combusted in a reducing gas generator to form hydrogen (H_2) and carbon monoxide (CO). These two reducing gases are then mixed with the Claus tail gas and sent to a catalytic reactor where all of the sulfur compounds are reduced to H_2S. The tail gas then enters an absorption column where the H_2S is absorbed by a di-isopropanolamine (DIPA) solution. The H_2S is then stripped from the DIPA solution using steam and is recycled back to the inlet of the Claus unit.

The tail gas, which still contains trace amounts of sulfides, is incinerated to convert remaining sulfides to SO_2 and vented to the atmosphere. The SCOT Process was developed by and is licensed by Shell Oil Company.

204.2.7 Wellman-Lord Tail Gas Cleanup Process

The Wellman-Lord Process is represented by Figure 204.4. In the Wellman-Lord Process, the Claus tail gas stream is first incinerated with air to oxidize the sulfur compounds to SO_2, and is then cooled. It enters an absorption tower and contacts a solution of sodium sulfite (Na_2SO_3). The sodium sulfite absorbs the SO_2 by reacting with it to form sodium bisulfite ($NaHSO_3$) and sodium pyrosulfate ($Na_2S_2O_5$). The SO_2-rich solution then flows to a regenerator where it is heated to drive off the SO_2. The concentrated SO_2 stream is then recycled back to the inlet of the Claus unit. This process was developed by Davy-Powergas, Inc.

204.2.8 Tail Gas Incineration

Both the Beavon and the SCOT processes may be followed by an incinerator for conversion of H_2S to SO_2 before the tail gas is vented to the atmosphere. The air quality inspector may be interested in the outlet temperature of the incinerator and in the type of fuel used. A common outlet temperature for this type of incinerator might be around 1400 °F to assure complete

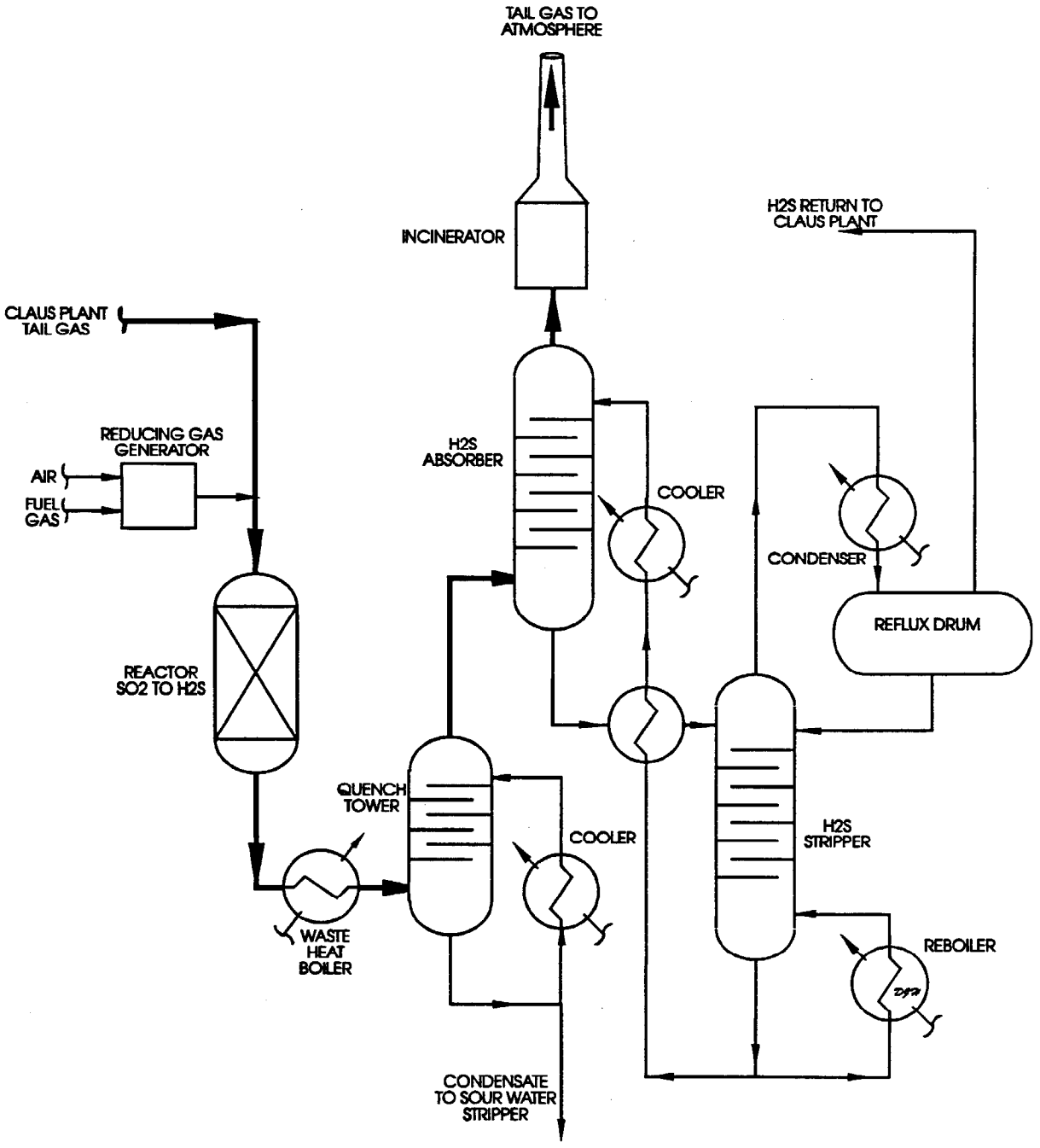

Figure 204.3
SCOT Tail Gas Clean-Up Process

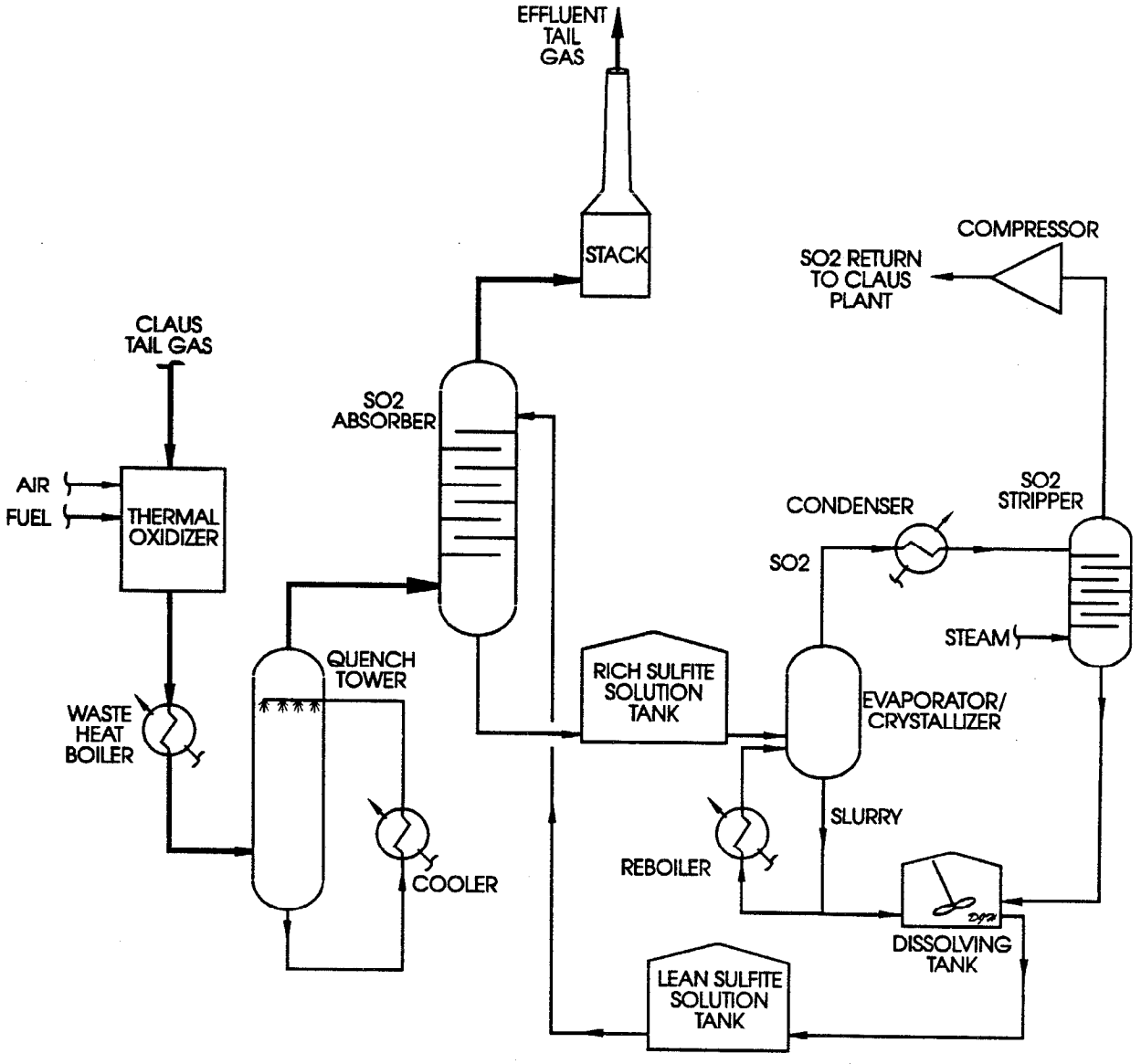

Figure 204.4
Wellman-Lord Tail Gas Clean-Up Process

conversion to SO_2. Natural gas or treated fuel gas might be burned to achieve the outlet temperature. The Beavon process can often achieve adequately low H_2S levels and may not require tail gas incineration.

204.2.9 Odors

Due to the high concentrations of H_2S and SO_2 in the process, the SRU can be a significant source of odors. In addition to the tail gas from the stack, there may be several other sources of these odors. In a walk-through of a sulfur recovery unit, one will almost always notice smells of H_2S, SO_2, sulfur, and perhaps other compounds.

In response to a public odor complaint which has been described as like rotten eggs (H_2S) or as sharp, pungent, and sour (SO_2), a check downwind of the SRU may be in order. The source could be a fugitive leak from within the unit. Other related possible sources of odor which may or may not be located within the SRU include:

- Sour water tankage
- Sour caustic tankage
- Sour water strippers
- H_2S absorption tower facilities for sour gas
- H_2S stripper tower facilities for amines (MEA or DEA)
- Truck loading facilities for liquid sulfur
- Sumps

204.2.10 Iron Sulfide

Iron sulfide is a black solid compound which often forms on the inside of steel vessels which contain sulfur compounds. The compound is of interest because when it becomes dry in the presence of air, it will begin to smolder and ignite, producing smoke and odors.

When process vessels (both from within the SRU and from other units) are removed from service for cleaning and maintenance, the vessels are usually treated with caustic to remove the iron sulfides prior to opening to atmosphere. If this treatment is omitted or not effective, the sludge of scale

and rust removed from the vessel during cleaning may contain significant amounts of iron sulfides. The sludge, when left in a hazardous waste bin, may then dry and ignite, causing smoke and odors.

This is not an uncommon occurrence and the inspector should be aware of the phenomenon when investigating for odors. Although these are probably not the first areas to check, units in turnaround (shut down for maintenance) and waste storage areas should not be ignored.

204.3 RULE DISCUSSION

This section discusses the various rules which limit emissions from Sulfur Recovery Units (SRU's) in refineries. In many cases, rules have been written to apply specifically to petroleum refining facilities. However, there are also several general rules which apply, especially those regulating visible emissions and odors.

The section will address some general topics first and then the four primary pollutants from SRU's, namely:

- Sulfur oxides, SOx
- Hydrogen Sulfide, H_2S
- Odors
- Particulate Matter (PM), and Visible Emissions

204.3.1 New Source Performance Standards (NSPS)

The EPA has issued 40 CFR 60, Subpart J, Standards of Performance for Petroleum Refineries. These are known as the New Source Performance Standards (NSPS). Subpart J affects refinery sulfur recovery units which were constructed or modified after October 4, 1976, by: 1) limiting SOx emissions or by 2) limiting the amount of sulfur in the refinery fuel gas. Most air pollution control districts with refineries have also adopted regulations which reflect subpart J.

Although most SRU's were built before 1976, it is likely that the units have been modified according to the 40 CFR definition. Section 60.14(a) states "Except as provided under paragraphs (e) and (f) of this section, any physical or operational change to an existing facility which results in an increase in the

emission rate to the atmosphere of any pollutant to which a standard applies shall be considered a modification..." Paragraph (e)(1), an exception, refers to routine maintenance. Paragraph (e)(2), another exception, states that the following shall not be considered an exemption: "An increase in production rate of an existing facility, if that increase can be accomplished without a capital expenditure for that facility." It is likely that increases in refinery production rates have required "modifications" to most SRU's since 1976.

As the sulfur load to existing SRU's increased during the last two decades, a typical factor which could limit the SRU is the capacity of the air blower to provide increased combustion air to the Claus plant. If a sulfur recovery unit is not currently meeting NSPS standards, and is suspected of having been modified, the inspector may be able to compare the unit's air blower horsepower rating with that listed on the Permit to Operate. Similar checks for other equipment listed on the Permit may also be appropriate.

204.3.2 California Health and Safety Code

The California ARB has only a few rules which directly affect sulfur recovery units. These include Section 41701 of the California Health and Safety Code which places limits on visible emissions (VE) from stacks. In most cases this rule is superseded by more stringent VE rules at district level. The ARB rules also include Section 41700 which prohibits a public nuisance. This section is often cited when odors affect the public.

Most local districts in California which have refineries have also adopted rules establishing regulatory requirements for the operation of sulfur recovery units. These regulations are discussed in the following paragraphs.

204.3.3 Exemptions for Older or Small Units

Some of the regulations create exemptions or less stringent limits for older or smaller SRU's. It is common for rules to require all new equipment to meet the most stringent standards but to allow older equipment to function as is until a later date or until it is modified. For this reason it is often necessary to know the date of construction or the date of the latest significant modification for a given unit. (See NSPS definition of "modification" above.)

Regulations also often offer exemptions or alternative emissions limits for small units. The definition of what is considered a "small SRU" may vary from district to district. For example, the federal NSPS regulations apply only to SRUs which produce more than 20 metric tons of sulfur per day. Other exemptions may be based on refinery throughput or total pounds of SO_2 emitted per day.

204.3.4 Continuous Emission Monitors

Normally, the tail gas stack must be equipped with a continuous emission monitor for either SOx or H_2S-sulfur compounds or both. Quality assurance (QA) procedures for the acceptable operation of these monitors are found in 40 CFR 60, Appendix F. These QA procedures include:

- daily calibration with two concentrations of span gas
- quarterly auditing of the span gas cylinder
- yearly comparison with source test to determine relative accuracy
- proper recordkeeping of the QA steps taken
- records available for inspection

CARB Method 100, Procedure for Continuous Gaseous Emission Stack Monitoring, provides specific requirements for the sampling methods. Method 100 is a CARB approved alternative to EPA reference methods, in particular EPA Methods 3, 6, 7, and 10.

In some cases, a continuous monitor may not be required and compliance is determined with periodic source tests, conducted by either district specialists or by contracted testers which have been ARB certified. There is also a trend toward the use of portable analyzers if proper stack gas sampling facilities are available. Units for measuring SOx emission concentrations are generally parts per million by volume (ppm or ppmv).

Abbreviations for Tables 201.1 through 201.5

The following abbreviations are used in Tables 201.1 through 201.5:

BAAQMD - Bay Area Air Quality Management District
CFR - Code of Federal Regulations
EPA - U.S. Environmental Protection Agency

Table 204.1
Federal (NSPS) Regulations Limiting Oxides of Sulfur (SOx) Emissions

Regulation	Limit
40 CFR 60.100 (a) and (b)	NSPS rules apply to Clause plants with a capacity greater than 20 long tons per day, which were built or modified after 10-4-'76.
40 CFR 60.104(a)(2)(i)	<250 ppmv SO2 in tail gas if the gas is incinerated
40 CFR 60.105 (a)(5)	Requires continuous monitor for SO2 if tail gas is incinerated
40 CFR 60.105(e)(3)(ii)	Defines reporting requirements per 60.7(c) which apply if SO2 > 250 ppm, 12 hr. avg.

ppm or ppmv - parts per million by volume. Both abbreviations are used because this is how they appear in the corresponding regulations.
SCAQMD - South Coast Air Quality Management District
SJVUAPCD - San Joaquin Valley Unified Air Pollution Control District
SLOCAPCD - San Luis Obispo County Air Pollution Control District

204.3.5 Emission Limits for Sulfur Oxides (SOx)

The EPA has issued 40 CFR, Chapter 1, Part 60, Subpart J, Standards of Performance for Petroleum Refineries. Subpart J affects refinery sulfur recovery units (SRUs) mainly by limiting SOx, H_2S, and sulfur compound emissions from SRUs built or modified after 1976. These are commonly called the New Source Performance Standards (NSPS). The local districts have adopted similar rules, some of which are more stringent, and which apply to all SRUs regardless of the date of construction.

A list of the federal NSPS regulations for SO_2 emissions is included in Table 204.1. A list of the district regulations is included in Table 204.2.

Table 204.2 District Regulations Limiting Oxides of Sulfur (SOx) Emissions		
District	Regulation	Limit
BAAQMD	9-1-301	Shall not emit SO2 which results in ground level concentrations > Calif. or federal ambient standards. Currently: .05 ppmv for 24 hr. avg. .25 ppmv for 1 hr. avg.
BAAQMD	9-1-305.4, 9-1-306.2 and 9-1-307	< 250 ppmv SO2 calculated at 0% O2, dry.
BAAQMD	9-1-313.1	< 0.10% sulfur in crude or
BAAQMD	9-1-313.2	Must remove 95% of H2S from fuel gases and process water and remove 95% of ammonia from process water.
BAAQMD	9-1-313.3 effective 10-1-93	Must have a sulfur removal and recovery system.
BAAQMD	9-1-502	Requires continuous monitoring for SO2 per rules 1-520, 1-522 (for SRU's emitting > 100 lb/day SO2.)
BAAQMD	9-1-606, 9-1-607	Test methods for H2S in fuel gas, water and NH3 in water to meet 9-1-313.
SCAQMD	468(a)	<500 ppmv sulfur compounds calc. as SO2, dry, 15 min. avg.
SCAQMD	468(c)	<90 kg (198.5 lbs.) per hour sulfur compounds calc. as SO2.
SLOCAPCD	404.B.1.a	< 200 ppmv sulfur compounds calc. as SO2.
SLOCAPCD	404.B.1.c	< 200 lbs./hr. sulfur compounds calc. as SO2.
SLOCAPCD	404.B.4	Special option for SRU's emitting < 10 lb./hr. sulfur compounds.
SJVUAPCD	407	<2000 ppmv sulfur compounds calc. as SO2, dry, 15 min. avg.

204.3.6 Emission Limits for Hydrogen Sulfide (H_2S)

Some tail-gas treatment units, in particular the Beavon-Stretford system, may not need to incinerate the effluent gases. In these, the effluent gases are likely to contain some H_2S and reduced sulfur compounds rather than SO_2. The federal NSPS standards limit the H_2S and reduced sulfur emissions from these units and most districts have adopted similar limits which apply to both new sources (built since 1976) and older units.

At least one district also limits H_2S emissions which are found to degrade nearby ambient air quality to below California clean air standards. A list of these regulations, the districts in which they apply, and the emission limits, is included in Table 204.3.

204.3.7 District Regulations Limiting Odors

The BAAQMD is currently the only district which has regulations which place specific measurable limits on odorous compounds. A list of these regulations is included in Table 204.4.

When faced with an odor source which is causing a public nuisance, most district inspectors will cite California Health & Safety Code (CHSC) Section 41700 which states:

"Except as otherwise provided in section 41705 [agricultural exemptions], *no person shall discharge from any source whatsoever such quantities of air contaminants or other material which cause injury, detriment, nuisance, or annoyance to any considerable number of persons or to the public, or which endanger the comfort, repose, health, or safety of any such persons or the public, or which cause, or have a natural tendency to cause, injury or damage to business or property."*

204.3.8 District Regulations Limiting Visible Emissions (VE)

All of the local air pollution districts in California have a visible emissions prohibitory rule. These rules vary in wording, but in almost all cases they express the following:

Table 204.3
Regulations Limiting Hydrogen Sulfide (H2S) Emissions

District	Regulation	Limit
All	40 CFR 60.104 (a)(2)(ii)	<10 ppmv H2S if tail gases are not incinerated
All	40 CFR 60.105 (a)(6)	continuous monitor for H2S and reduced sulfur if tail gases are not incinerated
All	40 CFR 60.105 (e)(3)(ii)	Defines reporting requirements per 60.7(c) if H2S or reduced sulfur compounds > 10 ppm, 12 hr. avg.
BAAQMD	9-2-301	H2S off-property limits < 0.06 ppmv for 3 min. avg. <0.03 ppmv for 60 min. avg.
BAAQMD	9-2-501, 9-2-601	Continuous monitoring and records requirements.
SCAQMD	468(b)	< 10 ppmv H2S, dry, 15 min. avg.
SLOCAPCD	404.B.1.b	< 10 ppmv H2S

"...no person shall discharge into the atmosphere from any source whatsoever any contaminant, other than uncombined water vapor, for a period or periods aggregating more than three minutes in any one hour which is:

(a) As dark or darker in shade as that designated as No. 1 (or 20% opacity) on the Ringelmann Chart, as published by the United States Bureau of Mines, or
(b) Of such opacity as to obscure an observer's view to a degree equal to or greater than does smoke described in subdivision (a)."

Table 204.4
District Regulations Limiting Odors

District	Pollutant	Regulation	Limit
BAAQMD	Odor	7-302	No odors beyond property boundary which remain odorous after dilution with 4 parts odor free air.
BAAQMD	Odor	7-301 and 7-303	Limits emission rates of numerous specific compounds. See regulations.
BAAQMD	Public Nuisance	1-301	similar to CHSC Section 41700
SCAQMD	Public Nuisance	402	similar to CHSC Section 41700
SJVUAPCD	Public Nuisance	4102-4.0	similar to CHSC Section 41700
SLOCAPCD	Public Nuisance	402A	similar to CHSC Section 41700

The State standard for visible emissions (Section 41701, California Health and Safety Code) is No. 2 on the Ringelmann chart, or 40% opacity. EPA Reference Method 9 describes in detail how such visible emission evaluations should be properly performed, and how to be certified to perform them. A list of these regulations, the districts in which they apply, and the emission limits, is included in Table 204.5.

Visible Emissions Certification

Check with the California Air Resources Board (CARB) for information on certification at 800-952-5588. The Compliance Division of CARB trains and certifies government and industry personnel in visible emissions evaluations at

Table 204.5
District Regulations Limiting Visible Emissions (VE)

District	Regulation	Limit
BAAQMD	6-301	< Ringelmann 1 or < 20% opacity
BAAQMD	6-305	No particulates which can be identified individually may fall on another's property and cause annoyance.
BAAQMD	6-330	A sulfur manufacturing operation shall not have emissions of SO3 and/or H2SO4 exceeding 183 mg/dscm.
SCAQMD	401(b)(1)	< Ringelmann 1 or < 20% opacity
SLOCAPCD	401 A	< Ringelmann 1 or < 20% opacity
SJVUAPCD	4101-5.0	< Ringelmann 1 or < 20% opacity

its popular "Fundamentals of Enforcement" class which is offered four times a year. Certified personnel are required to recertify every six months in order to demonstrate ongoing evaluation skill.

204.4 INSPECTION PROCEDURES

The following inspection procedures will give you a general description of how to inspect sulfur recovery units (SRUs) typically found in a petroleum refinery. Remember, this section is only an outline to provide you with guidance on how to conduct the inspection and what to look for. A copy of the applicable district rules should be placed in Appendix A. You should refer to your rule for specific requirements for which compliance must be determined. It is important to remember that you represent your agency and have responsibilities and liabilities. Be sure to follow your agency's policies.

204.4.1 Pre-Inspection Preparations

File Review

The following File Review section follows a sequence similar to that found on the Sulfur Recovery Unit Inspection Form (Figure 204.5).

Prior to the site inspection, the inspector should review all information available in the district source files. This information may include: approved permits, equipment lists, permit conditions (such as emission limits or operating conditions), previous inspection reports, Notices of Violation, breakdown reports, enforcement actions taken, complaints, variance histories, alternative emissions control plans, abatement orders, source tests, and processes involved at the facility.

Do your Homework

The inspector is encouraged to complete some portions of the inspection documentation before arriving at the facility, as this will save time during the pre-inspection meeting and will familiarize one with the facility. If your district has checklists or rule-specific forms, use them.

A suggested inspection form for SRUs is included in Figure 204.5. The form has been set up with pre-inspection data in the left hand column and the related field-acquired data in the right hand column. Completion of the pre-inspection portion prior to the site visit may help the on-site inspector to quickly determine whether or not the equipment meets requirements.

Short summaries of the district and federal regulations for sulfur units are included in Tables 204.1-204.5. Please review your district's regulations and do not assume that the tables included here are up to date or complete. These tables are included for guidance and comparison and are not intended to be an authoritative list of applicable regulations.

Check for exemptions. Record the date the SRU was built or last modified and compare it to the regulatory exemption dates. This is likely to be a critical piece of information for determining if the NSPS standards apply and what the other emissions limits are. This date will also help confirm what

Figure 204.5
Sulfur Recovery Unit (SRU) Inspection Form

Pre-Inspection:	Field Inspection:
Facility name:	Date/Time:
SRU ID number:	Inspector:
Permit number:	District:
Permit expiration date:	Facility contact person(s)/title(s):
Facility address:	
Date system was built or last modified:	Visible emissions noted? If yes, attach VE evaluation data sheet.
Is unit subject to NSPS Regs.?	
Applicable emission limits. SOx: H2S: sulfur compounds: Are CEM's required?	CEM's in operation? In good working order? Calibrated daily? SOx level: H2S level: Field test results (if any) and method used:
Date of latest source test. Results:	Excessive odors noted in area? Description of odor: Source of odor:
Rated sulfur production capacity:	Sulfur production rate: Acid gas feed rate:

Figure 204.5 (continued) Sulfur Recovery Unit (SRU) Inspection Form	
Pre-Inspection:	Field Inspection:
Is a tail gas incinerator installed? Is incinerator required? Outlet temperature limit: Other requirements:	Is tail gas incinerator in operation? Outlet temperature: Other:
Are ground level monitors (GLMs) located nearby? Where? For what compounds?	GLM Readings:
Additional provisions in Permit to Operate:	
Recordkeeping requirements:	
Conclusions and Notes:	

auxiliary equipment was required under the New Source Review (NSR) rule at the time of construction. In general, Best Available Control Technology (BACT) requirements are included as a part of the permit conditions.

Record the rated sulfur production capacity for the SRU and compare it to the NSPS regulations (Table 204.1) and/or district regulations.

Note the date of the latest source test and the test results. The test history, depending on whether it is good or marginal, will help determine when another source test may be required. Source tests are generally requested by permit engineers annually or semiannually. The source test results are then evaluated by experienced supervising inspectors or engineers. Please note that all source testers must be evaluated and certified by CARB. For comparison, list the applicable emission limits according to your district's regulations and the Permit to Operate. If the source gave marginal results for one or more pollutants, you may wish to make use of portable test equipment for a rough evaluation.

Examine the Permit to Operate for specific equipment requirements.

Determine the limits allowed for sulfur compounds in the tail gas stack effluent and note whether a continuous SO_2 or H_2S monitor is required. If a continuous emissions monitor is required, note the required frequency for instrument calibration and testing (as discussed in section 204.3.)

Total Sulfur Compound Emissions

Several districts have regulations limiting the total amount of sulfur compounds discharged per day (see Table 204.2). If the source is in one of these districts, peruse the files to find a sample calculation and note the data necessary for the calculation. Prepare to record this information during the inspection. Generally this information will include the concentration of sulfur compounds and the flow rate of the tail gas effluent. The flow rate may be difficult to obtain or may require some calculation.

If this information is difficult to obtain, one option is to request that the source determine the sulfur compound emission rate and provide the calculation to you, the inspector. You can then verify the validity of the calculation and check the data used during the inspection.

Regulation Review

You should review any references to the specific rules which are noted in the source files. In particular be familiar with each standard and exemption in the rule. Discuss the regulation with experienced personnel and review any policies your district may have. Make sure that you receive consistent interpretations on how to apply the requirements of the rule.

Equipment Check

Make sure that you have the following equipment available for use during the inspection: vision protection, hearing protection, safety shoes, hard hat, gloves, fire retarding clothing (e.g. Nomex), identification, business cards, pens, wipes, inspection forms, and hydrogen sulfide detector ampoules. Optional equipment might include a Draeger test pump with detector tubes, or portable analyzers for NOx, SOx, CO, O_2, H_2S and hydrocarbons. Gas samples would require sample cylinder, adapter fittings, and Chain of Custody forms. A Scott air-pack may be advisable.

Pre-Entry and Entry

When you arrive at the refinery, observe the facility from outside. Note any odors or visible emissions and note the size and layout of the facility. A drive around the perimeter may be useful. Enter the facility through the normal public access and request to see the contact person mentioned in the last inspection report. Depending on the facility, this may be the environmental coordinator, production manager, supervisor, president, or maintenance worker. Always present your business credentials immediately to avoid confusion.

If the source is unfamiliar with your district's authority, be prepared to cite and provide copies of California Health & Safety Code (CHSC) Section 41510: Right of Entry; and Section 42303: Information Required (copies are included in Appendix A). Know and follow your district's policy if the facility refuses entry.

Pre-Inspection Meeting

Before an inspection tour begins, the inspector should meet with the source representative to obtain operating information. The inspector should state the purpose of the inspection and identify the equipment which will be inspected. Facility and equipment information (such as the operating schedule, throughput rate changes, or equipment out of service) can be verified during this meeting. Record the contact name, title and phone number, as well as the date, time, and your own name. Discuss safety procedures and whether or not there are currently any abnormal operations, maintenance, or other concerns.

If you have not already reviewed the Permit to Operate in the pre-inspection, you should request to see a copy of the Permit(s) for the facility and check to see if the Permit(s) is current and valid. Also, check existing Permit conditions and ask if any changes have been made to the operation which are not reflected in the Permit.

204.4.2 Facility Inspection Procedures

The following Facility Inspection section follows a sequence similar to that found on the Sulfur Recovery Unit Inspection Form (Figure 204.5).

Check-in with the Unit Operator

If visible emissions or odors were noted in your overview of the facility, you may wish to investigate them first. Otherwise, proceed to the scheduled operating unit and follow proper check-in procedures. These procedures always require that you obtain permission to enter the unit from the operator in charge who can usually be found in the control room. In almost all cases, the district inspector will be accompanied by a representative of the company who will follow these procedures. However, you should be aware of their procedures and be sure they are followed. Check-in with the unit operator is extremely important to your safety.

Check the Permit to Operate

The inspection is performed by checking the Permits to Operate for each permitted item and making sure the equipment runs in accordance with permit conditions and district regulations. Permits must be posted and they must be current. When you inspect the equipment, see that it is consistent with the list of equipment in the Permit to Operate and that it has not been altered since the last Permit was issued. Most districts require an Authority to Construct before changes can be made to equipment. Unauthorized changes may be a violation of the Permit condition or district rule.

A common alteration which can be easily verified is the replacement of original equipment with that of a higher horsepower rating. Horsepower ratings of pump and compressor drivers are normally included on the Permit. If equipment has been modified, look to see if there is an Authority to Construct. A Notice of Violation may have to be issued if procedures regarding Permits are not followed.

Sulfur Recovery Unit Inspection Form

The suggested inspection form (Figure 204.5) is included to help the inspector organize the inspection data to be gathered. Having completed the pre-inspection portion as described in 204.4.1, the corresponding field inspection portion should be completed during the site inspection.

Record the date, time of arrival and departure, inspector's name, and the name of the industry representative who accompanies you.

Note any excessive odors in the area, especially those which can still be detected a short distance downwind of the unit. As noted earlier, the sulfur recovery unit is a smelly unit and some experience will be required to determine when a problem may have occurred. Remember that H_2S is a dangerous gas so use caution if you attempt to sniff out odor sources. A personal H_2S monitor and/or lead acetate ampoule is recommended.

Record the sulfur production rate and acid gas (feed gas with H_2S) rate. Compare with the rated capacity of the unit and with Permit limits.

Inspect any nearby ground level monitors and record recent concentrations of H_2S and/or SO_2. Compare with any specific rule requirements (BAAQMD 9-2-301). In some cases, inspection vans with portable ground level monitors have been used downwind of a facility to measure these and other pollutants, especially when investigating odor complaints. A practical method to detect H_2S at a facility boundary is to hang a piece of lead acetate paper on the downwind fence overnight. Please note that lead acetate paper can detect low levels of H_2S but cannot be used to accurately determine concentrations.

Continuous Emission Monitor Inspection

In almost all cases, a continuous monitor for SO_2 or H_2S is required on the tail gas stack. Record the monitor reading and compare it to the applicable limit. Review the data history for excursions. This may be found on a recorder chart for the instrument or in a computer database. Any excursions should probably have triggered reporting requirements. Also verify that the instrument has been properly calibrated (as discussed in section 204.3.) Daily calibrations should be apparent on the chart and the chart paper should have the proper range for the application.

Visible Emission Inspections

Observe the tail gas stack(s) for emissions which would violate the opacity or Ringelmann limitations in your district regulations. Remember, you must be certified to do a visible emissions evaluation. You should have a stop watch or a watch with a second hand and means to determine ambient temperature, wet bulb temperature, and relative humidity.

204.4.3 Post-Inspection Procedures

Prior to leaving the facility, the inspector should evaluate the compliance status of the target equipment and should have obtained all the information necessary to complete the inspection form. Make sure you have also acquired all the necessary documents to determine the compliance of the operation.

Appropriate personnel at the facility should be informed of the results of the inspection. They should be advised of any areas of concern where additional information or investigation is needed. If warranted, give a Notice of

Violation (NOV) as soon as possible. Be prepared to make your compliance determinations, calculate excess emissions, and issue necessary violation notices. If you are unsure whether a violation has occurred, consult your supervisor. Be able to document future NOVs which may be pending due to sample results or additional information requests. **Follow up all violations**, according to your district policy, to ensure that the source is brought into compliance.

301 FUGITIVE EMISSIONS

301.1 INTRODUCTION

Petroleum refineries have miles of piping and numerous components through which steam, water, oil, gaseous fuels and chemicals flow. The flow components (valves, fittings, pumps, compressors, pressure relief devices, diaphragms, hatches, sight glasses, meters, etc.) in a refinery can leak gases or liquids into the atmosphere. The leaks of light or volatile hydrocarbons, also called volatile organic compounds (VOCs), are of greatest concern with respect to their effect on air quality. These reactive hydrocarbons, such as butane (C_4H_{10}), react with nitrogen oxides in the atmosphere in the presence of sunlight to form ozone (O_3), a major component of smog.

Hydrocarbon leaks from valves, pumps, and compressors are generally referred to as **fugitive VOC emissions**. Fugitive emissions are estimated to be responsible for over 50 percent of the total VOC emissions from refineries or about 10,000 tons per year in California based on the 1990 CARB emissions inventory.

This section is designed to help you, the field inspector, to conduct a complete and efficient compliance inspection for VOC leaks from valves, pumps, compressors, and other components. There will be brief descriptions of the major types of valves, piping connectors, pumps, compressors, etc., with discussions on where leaks are most likely to occur. The federal and district regulations affecting fugitive emissions will be discussed and suggested inspection procedures will be presented.

301.2 VALVES

Valves are used to control the flow rate, turn a flow on or off, switch flows along different routes of piping, or control the direction of flow of gases or liquids. Many valve designs exist, but some of the typical types of valves found in refineries include gate, globe, plug, flow check, butterfly, and ball valves. Figure 301.1 shows the common types of valve mechanisms.

301.2.1 The Parts of a Valve

The major parts of a valve include the disc, stem, body, bonnet, packing gland, and handle. These are illustrated in Figure 301.2. The **disc** of a valve directly contacts the flow and permits or restricts the flow of a fluid or gas. The **stem** is used to move the disc in order to control the flow.

The **body** of a valve contains the disc, and the material flowing through the valve. **Bonnets** house and support the stem above the disc. Bonnets may be bolted, breechlocked, or screwed to the body. Bolted bonnets are the most common and are sealed to the body using a gasket. In a breechlock, the bonnet and body are seal-welded together. Breechlocks are expensive, but they are sometimes used for valves under very high pressure. Screwed bonnets are generally not used in hazardous applications.

Packing is inserted between the stem and bonnet to seal and prevent leakage while allowing rotation and movement of the stem. A **packing gland** is used to push the packing into the gap between the bonnet and stem. A circular handle or handwheel is most often used to open and close the valve.

The names of these parts may differ among different valve designs. The disk may be called the plug disk, wedge, or plug. The stem may also be called the spindle. A clamping type bonnet can be called the yoke bonnet, a screwed in type bonnet can be termed a screw-over bonnet or a screw-in bonnet.

301.2.2 Types of Valves

The two main functions of valves are to shut off flow and to regulate the rate of flow. Most valves are designed to do one function or the other, but few valves can do both well. For example, **Gate valves** and **plug valves** are designed to shut off a flow of fluid and have no leakage through the valve. However, when trying to regulate flow, a small turn on the handle may produce a larger than expected (or smaller) flow rate change.

Globe valves, **ball valves**, and **butterfly valves** are designed primarily to regulate flow. Valves which are designed to regulate flow may have a higher pressure drop when fully open and may have more difficulty achieving a positive shutoff. Valves which can perform both functions well tend to be more expensive.

Flow check valves, as shown in Figure 301.3, allow a flow only in one direction and are generally self operated. The disk is easily pushed out of the way by flow in the desired direction while gravity and a flow reversal work to push the disk onto its seat, halting reverse flow.

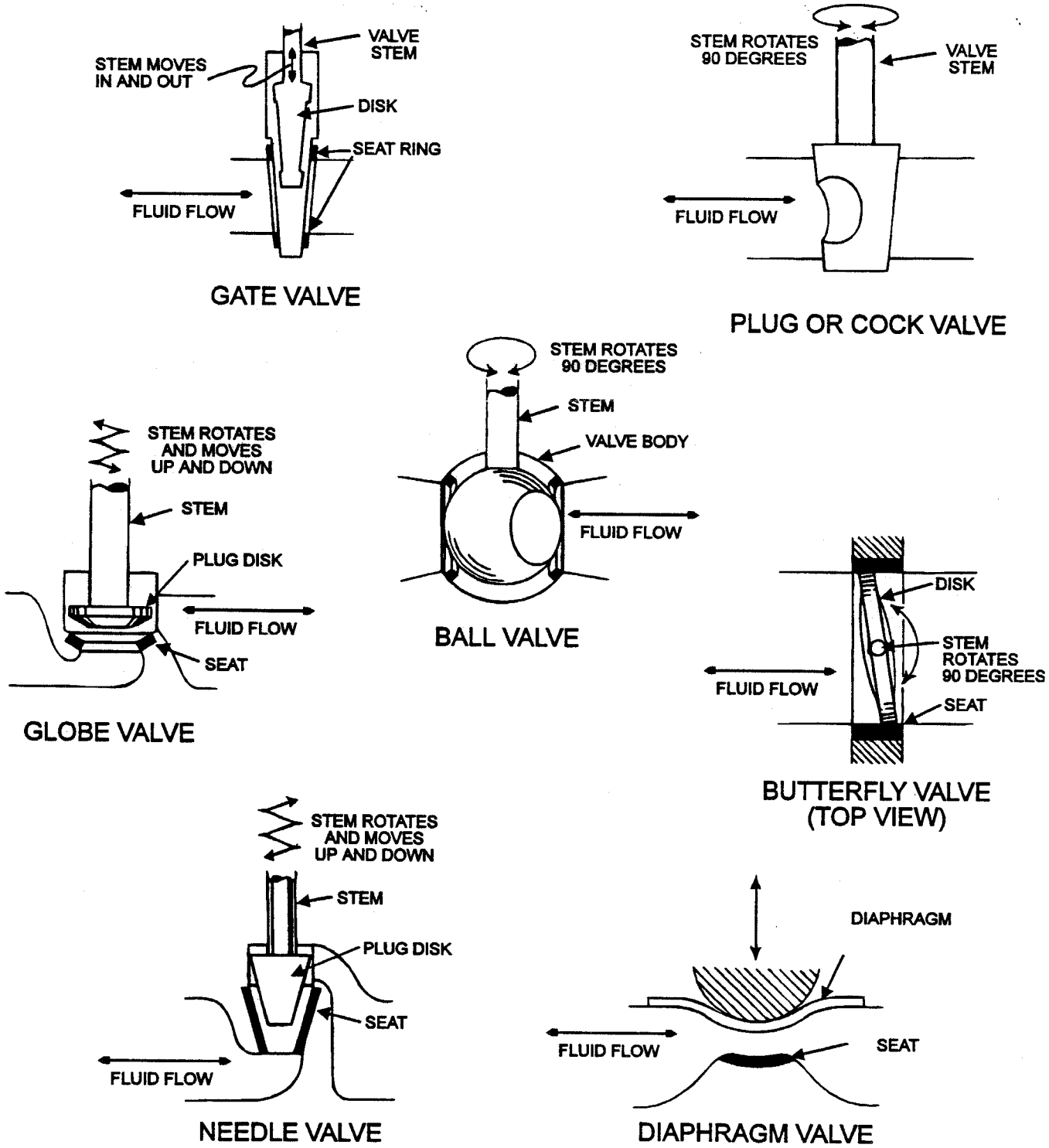

Figure 301.1
Valve Types and Mechanisms

Valves may be actuated manually or automatically. Hand operated valves may be designed so the turning of the handwheel operates a gear train that turns the valve stem. Gears help reduce the torque required to operate valves and are especially helpful on large valves. Valves that are not accessible may be operated by handwheels connected to chains, which hang to ground level.

Plug valves, ball valves, and butterfly valves have a stem which rotates only 90°. Valves that are operated by levers or cocks make the operation of a valve simpler and faster, requiring only 90° of rotation. However, the plug in the valve may jam, requiring a lot of torque on the handle to operate the valve. Ball valves and butterfly valves usually only require a small amount of torque on the handle.

Automatically powered valves are common in refineries and may have pneumatic, electric, or hydraulic operation. One type of automatic valve is the control valve, so named because it is used to control the flow rate, temperature, pressure, fluid level, etc. in a process. Most of these control valves are operated using compressed air. The valve stem is connected to a diaphragm and a spring. Air pressure on the diaphragm compresses the spring, moving the stem and opening or closing the valve in increments. The air pressure to the valve diaphragm is determined by a controller which receives a signal from the instrument measuring the flow rate, temperature, etc.

Electric motors can be used to operate valve stems through reducing gears. Solenoids may be used to operate fast-acting check valves or on/off valves in light-duty service. Pneumatic and hydraulic valves are often used in areas that are inaccessible, under high pressure or temperature, or where flammable vapors are present. These valves may be actuated through the use of pistons driven by air, water, oil, or other liquids.

301.2.3 Valve Leak Sources

Hydrocarbon leaks can develop in valves from thermal stresses, vibrations, corrosion, and wear. These effects can lead to the misalignment and distortion of sealing surfaces. Valves most often leak around their stems and housing connections. Valve stems are packed with asbestos, fluorinated hydrocarbon plastics or laminated graphite. Housing connections in the valve have gaskets to prevent leakage. Plug valves are lubricated with grease

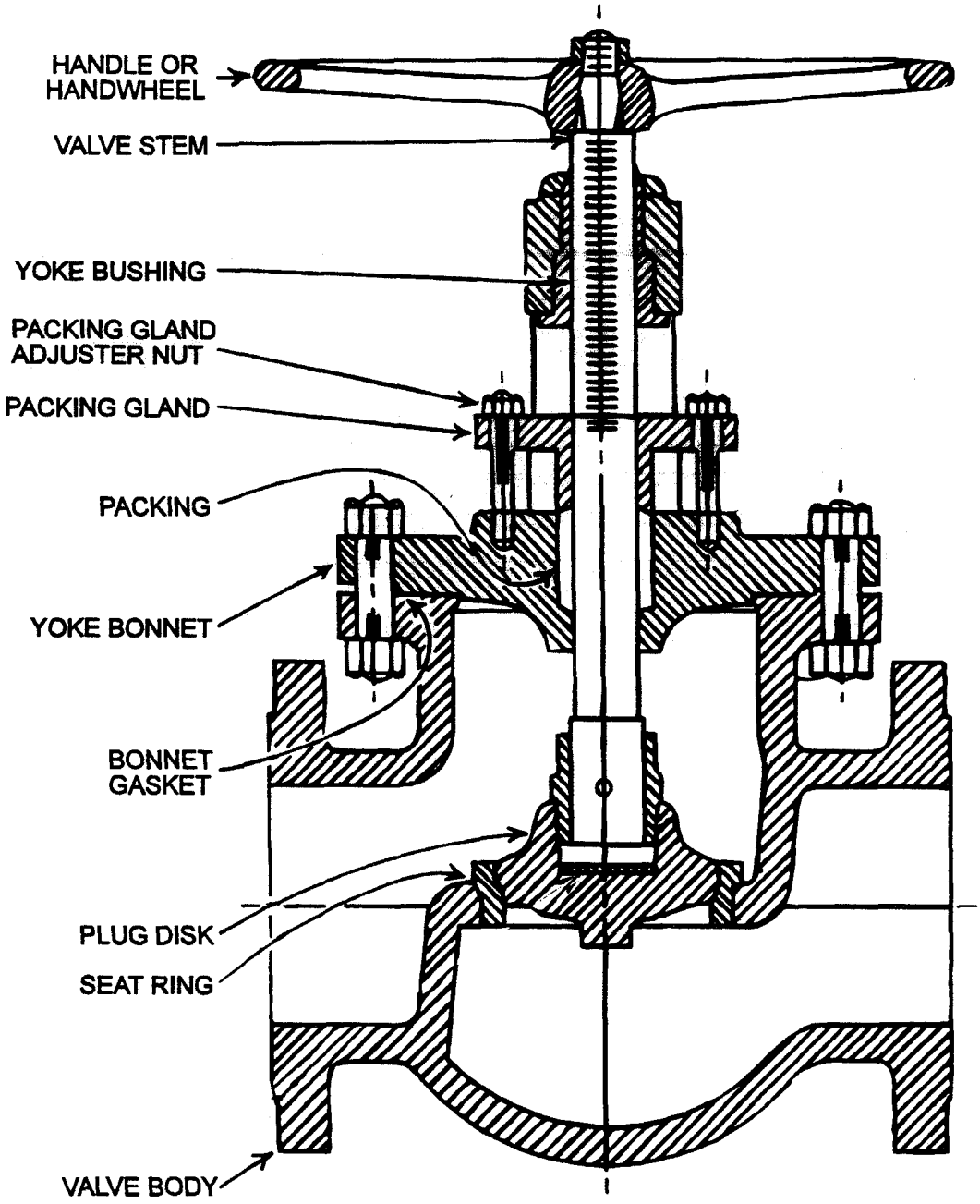

Figure 301.2
Parts of a Globe Valve

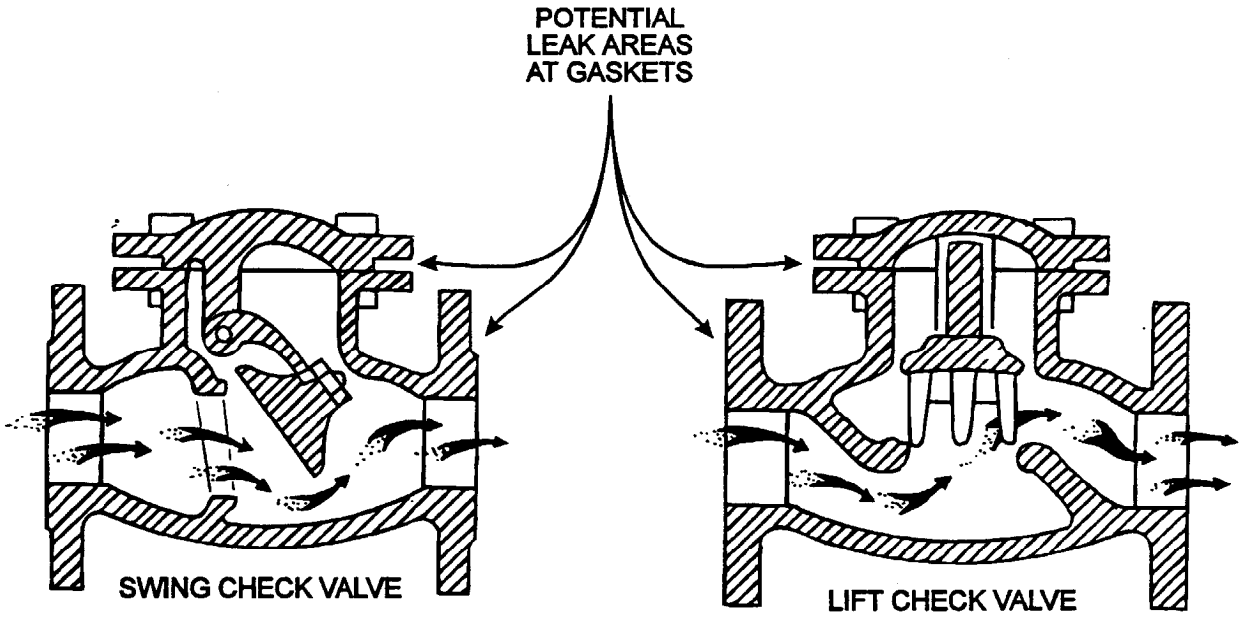

Figure 301.3
Flow Check Valves

to help prevent the leakage of hydrocarbons. Leaks can emanate past the packing which surrounds the valve stem and the gaskets in a valve. Common leak areas in gate and plug valves are illustrated in Figure 301.4.

Although the leak rate of hydrocarbons is usually small for any one valve, the cumulative hydrocarbons released from a refinery can be large because of the large number of valves in the facility. Valves carrying hydrocarbon gases usually leak more hydrocarbons than valves where liquids are flowing, especially when the gases are under high pressures. Inspections done by the Air Resources Board have found that 85% of hydrocarbon emissions from valves are from those carrying gases.

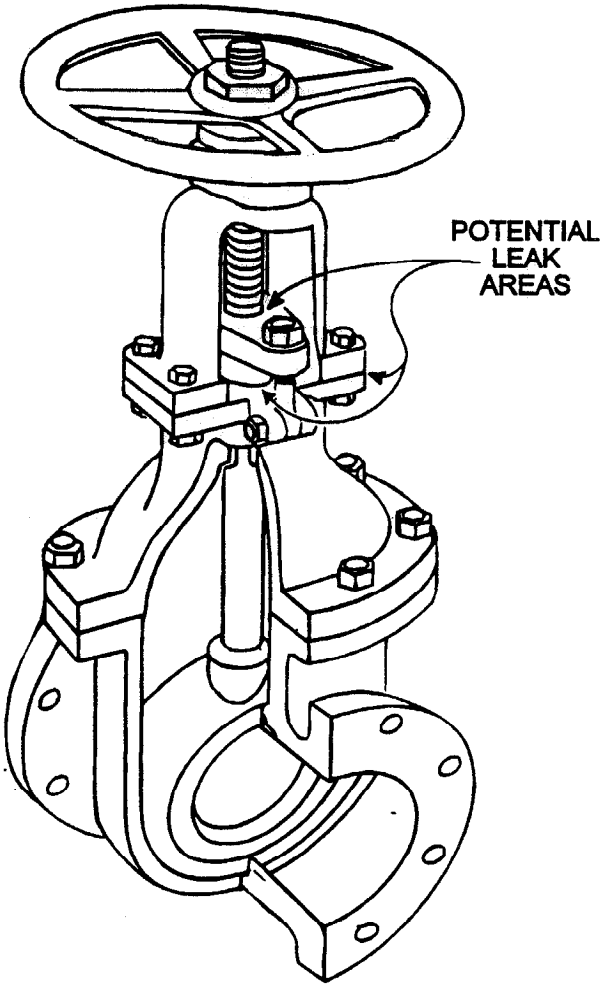

GATE VALVE

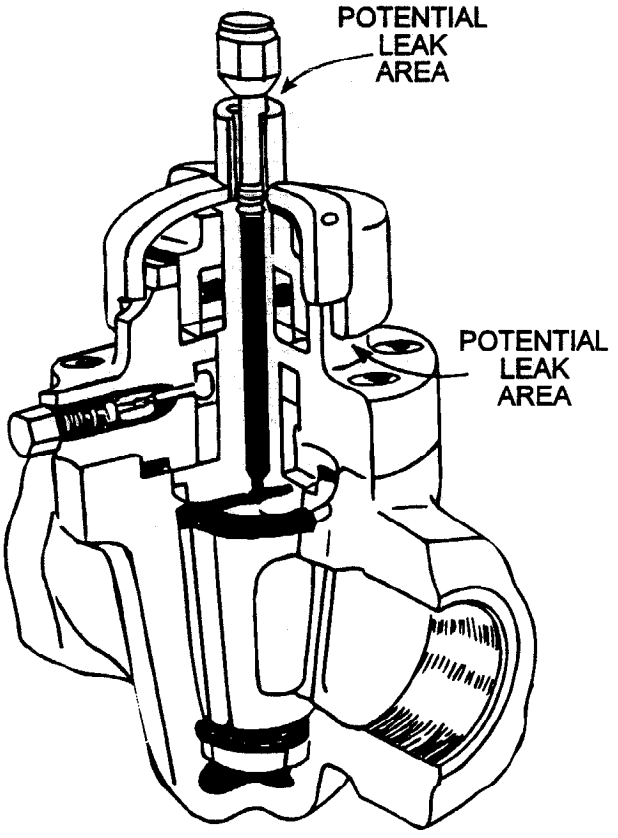

PLUG VALVE

Figure 301.4
Potential Leak Areas for Gate Valves and Plug Valves

Leaks from valves with packed stem seals can usually be eliminated by tightening the packing gland on a valve, injecting lubricant, or replacing the packing if it cannot be tightened anymore. Valve packing must be replaced eventually because it loses its resiliency as it ages. If lubrication or replacement of the packing does not provide compliance with district leak standards, all or part of the valve may have to be replaced or overhauled.

Valve leaks can only be controlled by performing prompt regular inspection and maintenance. Leaks that are large enough to be seen, heard, or smelled are often an indication of poor inspection and maintenance procedures.

301.3 PRESSURE RELIEF DEVICES

Pressure relief devices (also called pressure relief valves, PRVs, pressure vacuum valves, or PV valves) are valves that are made to release pressure from a vessel or relieve a vacuum on a vessel. They prevent damage to equipment and are a safety feature on most vessels in a refinery. Occasionally, something may go wrong and cause a rapid buildup of pressure in a vessel. Pressure relief devices are usually designed to open at or near the maximum allowable working pressure (MAWP) of a vessel.

When a pressure relief device opens it may release hydrocarbons or odorous gases to the atmosphere. Sometimes pressure relief devices will not close properly after they release pressure, so they should be inspected after any release. It may be difficult to determine if some pressure relief devices have opened so these valves should be covered by an inspection and maintenance program.

301.4 FLANGES AND OTHER PIPING CONNECTIONS

There are about 20 ways of joining piping sections, but the three main methods include: welds, flanges and threaded fittings. Many piping connections are welded when disassembly of connections will be unnecessary. Proper welds are practically leak proof connections, but they may fail or corrode.

Bolted flanges (Fig 301.5) are a common type of connection used for pipes, valves, and process equipment when disassembly for maintenance may be required. Flanged connections are usually used for piping carrying flammable

or other hazardous materials because they are stronger and leak less than screwed fittings. Leaking oil or hydrocarbons are a fire hazard and are usually not tolerated in a refinery. Flanged connections are bolted together with a gasket material, usually made of asbestos or metal, between the flanges. Leaks can occur from between the flanges due to thermal stresses, faulty gaskets or improper tightening of bolts. In practice, flanges are rarely found to leak and are relatively small sources of emissions.

Most threaded fittings are used for joining small diameter piping under two inches in diameter. Threaded connections can leak, especially when they are disassembled regularly. Threaded connections can also break more easily, especially when stepped on or subjected to some other heavy load. Many refineries have piping standards that do not allow threaded piping to carry flammable or dangerous materials because of the increased chance of leaks and breaks at threaded connections.

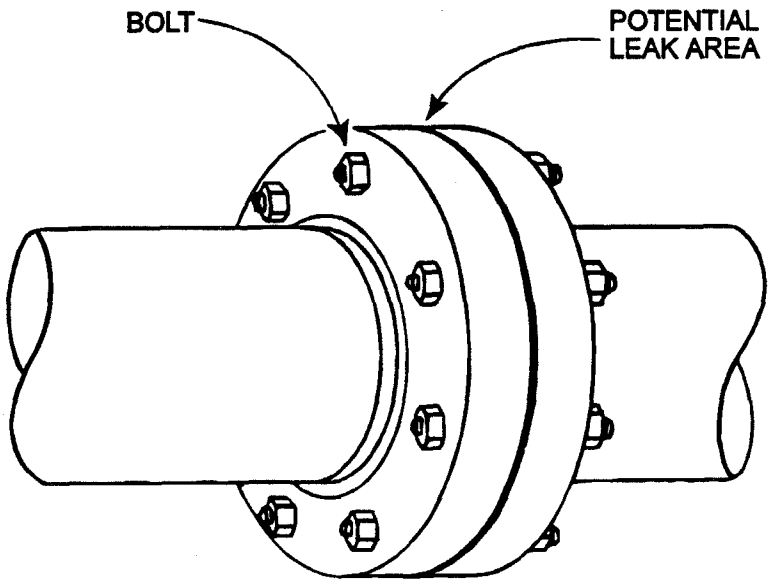

Figure 301.5
Bolted Flange

301.5 PUMPS AND COMPRESSORS

Pumps are mechanical devices that impart energy to a fluid, and are used to transport a liquid from one location to another. There are two main types of pumps: Centrifugal and positive displacement. **Centrifugal pumps** have rotating impellers which provide kinetic energy and static pressure to the fluid (Fig. 301.6). The impeller is usually driven by an electric motor, steam turbine, or engine. The motor, turbine, or engine which delivers the power is often called the "**driver**". About 90 percent of the pumps used in the refining industry are centrifugal. The most common **positive displacement pumps** include reciprocating pumps (which use pistons, plungers, diaphragms or bellows) and rotary pumps (using vanes, screws, lobes or progressing cavities).

301.5.1 Shaft Seals Using Packing

Pumps most frequently leak between the stationary casing and the moving shaft. Shaft seals help prevent this leakage. Seals can be stationary (packing) or rotating (mechanical seals). Packed seals are generally lower in

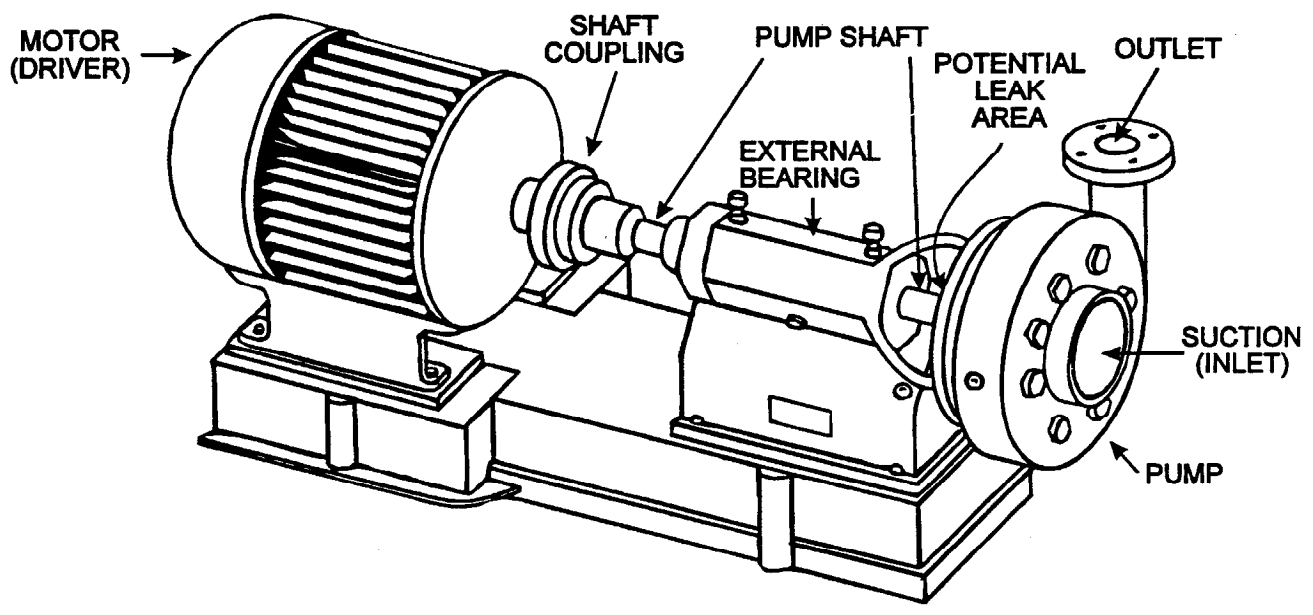

Figure 301.6
Centrifugal Pump

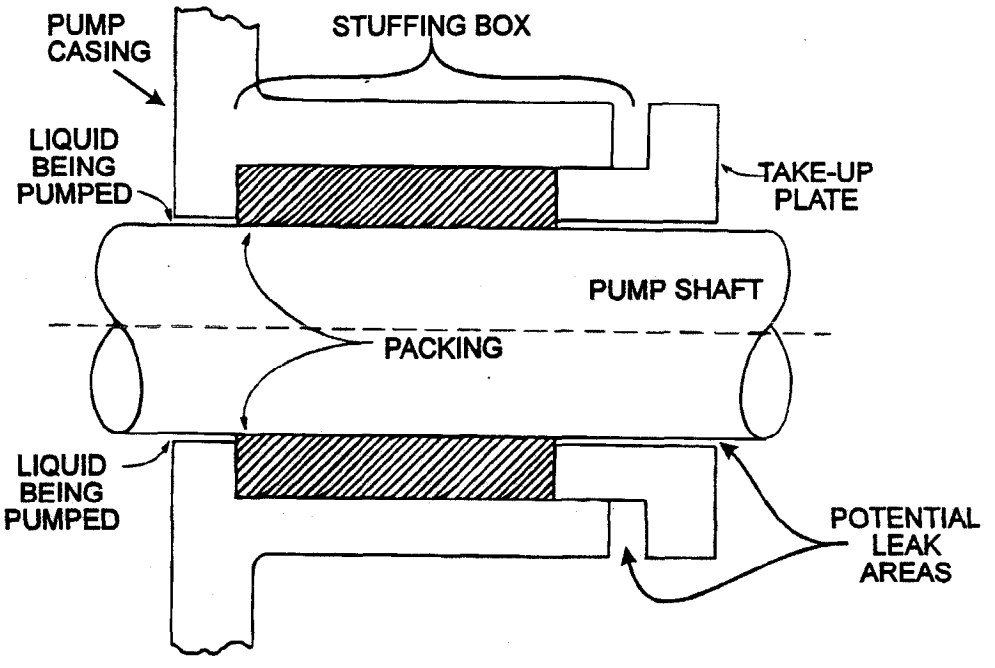

Figure 301.7
Packed Seal

initial cost and are often used where some leakage is tolerable, for gritty fluids, and for intermittent service. Packing material can be made of leather, fiber or other elastic materials. The packing is pushed into the stuffing box, which is a cavity in the housing surrounding the shaft (Fig. 301.7). A take-up plate or ring is used to stuff the packing tightly into the stuffing box. The take-up plate is bolted to the housing and the bolts are tightened (taken-up) to stuff the packing in more tightly. This may be done periodically or when a leak occurs. Packed seals can be used on shafts which rotate or move back and forth (reciprocate).

Packing must usually be lubricated and/or cooled. In most cases, the fluid being pumped supplies the lubrication as it is pressured between the shaft and the packing. This may also provide some cooling. If the take-up plate is tightened too much and the packing becomes too tight, the fluid cannot lubricate the packing and friction will heat up and erode the packing, causing leaks and seal failure. Adjusting the packing can be a delicate operation. When the take-up plate has been tightened all the way and the packing has

been used up and is no longer effective, the packing must be replaced. Packing replacement generally requires that the pump be shut down and depressurized.

In some cases, a lubricant (sometimes called seal oil) can be injected into the stuffing box when required. Seal oil generally has a very low vapor pressure and visible seal oil leaks might not be an enforceable source of VOC emissions. Other methods of externally cooling the stuffing box are also available.

301.5.2 Mechanical Shaft Seals

Mechanical seals are used only for rotating shafts. The seal is located in the stuffing box and consists of two circular sealing surfaces in contact with each other (Fig. 301.8). One of the seal surfaces is attached to the shaft and rotates with it. A stationary seal surface is attached to the housing, and is pushed by springs against the rotating half of the seal. Mechanical seals are now commonly used for clean liquid service because of fewer leaks, less maintenance, and reduced hazards. Many mechanical seals require more complicated, efficient designs to prevent leakage. Figure 301.8 also shows a double mechanical seal which is often used for critical, toxic, and non-lubricating liquid services.

Many modern pumps are designed with a stuffing box which can accommodate either packing or a mechanical seal. Older pumps, most of which were designed to use packed seals, often have a stuffing box which is too small for the installation of a mechanical seal. Retrofitting a mechanical seal to one of these older pumps can be difficult and expensive. Many refineries have a program in place where these older pumps are gradually being retrofitted, with the most critical or problem pumps being done first.

Some non-leaking pumps that are totally enclosed and do not require seals have been developed. Magnetic drivers can be used to run pumps across housings. Some pumps have diaphragms to keep pumped products from contacting working parts. These types of non-leaking pumps are usually expensive and are not common at this time, but their popularity is increasing.

The sum of emissions from all the pumps and compressors in a refinery can be large. Regular inspection and maintenance is necessary to prevent hydrocarbon leaks, since packing and mechanical seals wear down over time.

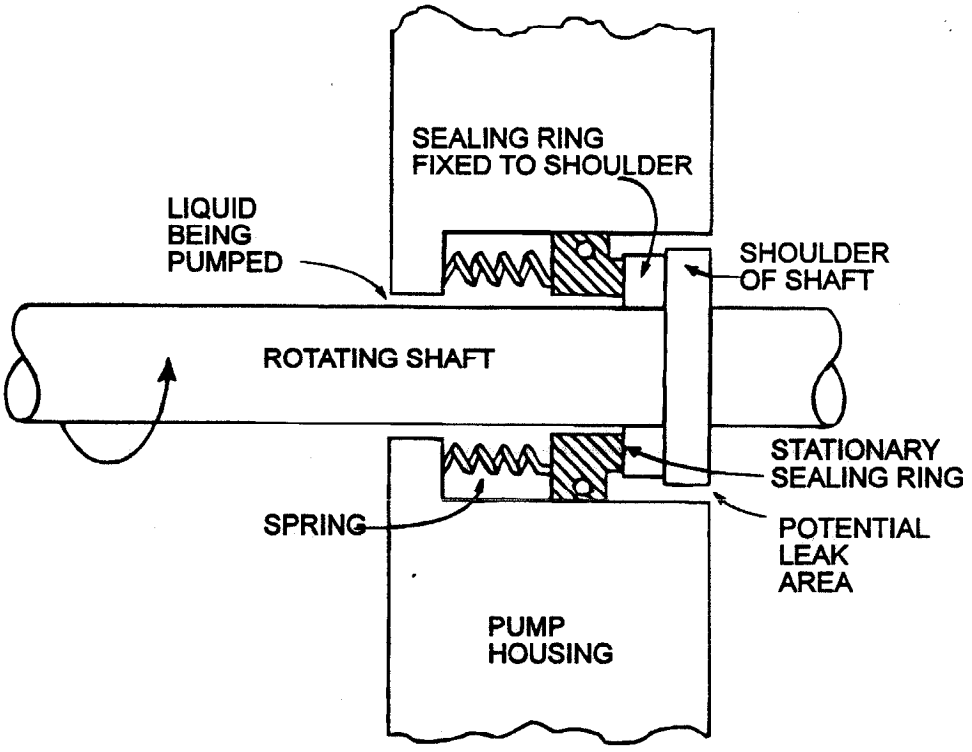

SIMPLE MECHANICAL SEAL

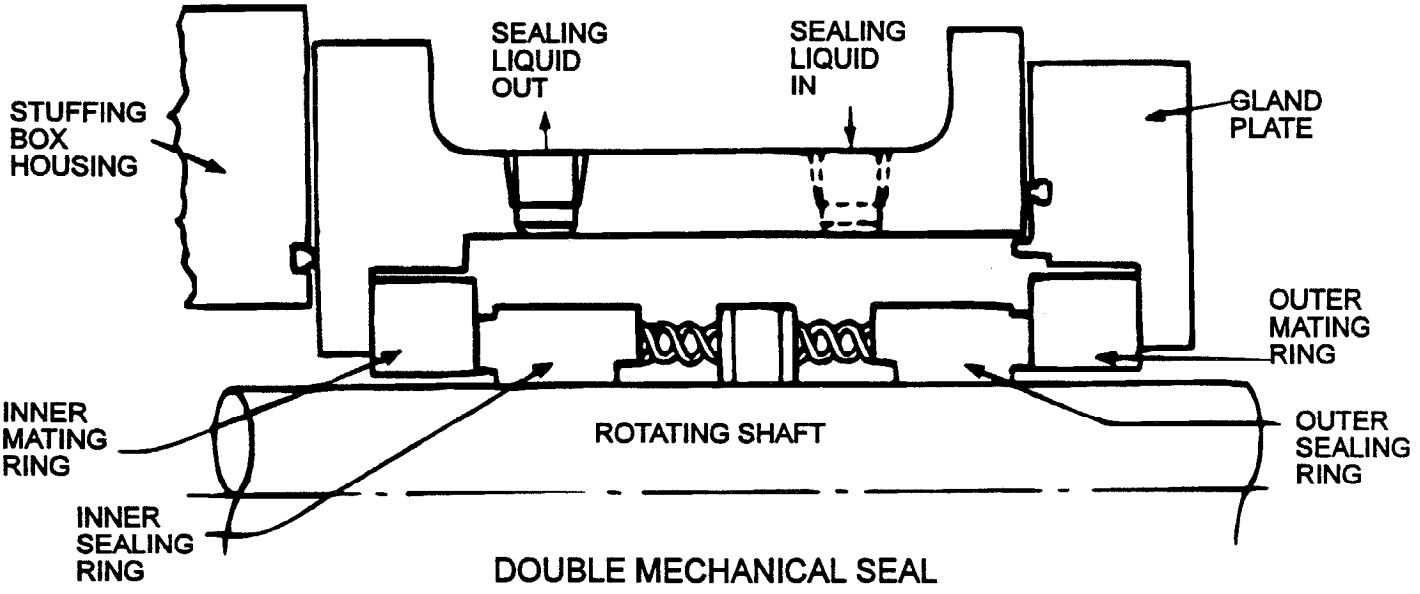

DOUBLE MECHANICAL SEAL

Figure 301.8
Mechanical Seals

Corrosive, abrasive products and temperature changes increase the occurrence of sealing surface failure. Studies conducted by the California Air Resources Board have found that packed seals tend to leak more hydrocarbons than mechanical seals. Mechanical seals were designed to reduce the leakage from equipment, but mechanical seals can be more expensive to use than packed seals. Pumps moving products with high vapor pressures have a higher probability of leakage and must be checked more frequently.

301.5.3 Compressors

Compressors are used to compress and transport gases. They are similar to pumps in that they are also generally either reciprocating or centrifugal. Reciprocating compressors have pistons and cylinders similar to an internal combustion engine. Reciprocating compressors are used when high pressures are required and centrifugal compressors may be used when a large flow rate is needed. Centrifugal compressors have rotating impellers similar to pumps. They make a smooth constant sound during operation unlike the chugging noise made by reciprocating compressors. The term compressor is usually used for machines generating high pressures; the term blower or fan is often used for machines working at lower pressures.

For a reciprocating compressor, the piston shaft passes through a crosshead which keeps the motion of the shaft linear. (The piston shaft then attaches to a connecting rod which then connects to a crankshaft.) The linear motion of the piston rod allows packed seals within the crosshead to prevent leakage of the compressed gas to the atmosphere. These seals must usually be lubricated with oil, which also helps reduce gas leakage.

A centrifugal compressor can have a packed seal or a mechanical seal similar to those found in pumps. The labyrinth seal is common for this service (Fig 301.9).

301.6 OTHER EQUIPMENT

Other devices such as sight glasses and instruments can also leak and be sources of VOC emissions. Sight glasses are generally used to determine liquid levels in vessels. Instrumentation includes sample or pressure taps, tubing connections, flow meters, thermocouples, etc. Sight glasses are assembled with gaskets and may leak from the gaskets, at piping connections, or from cracks in the glass. Instruments may leak at piping or tubing connections, or from the instrument itself.

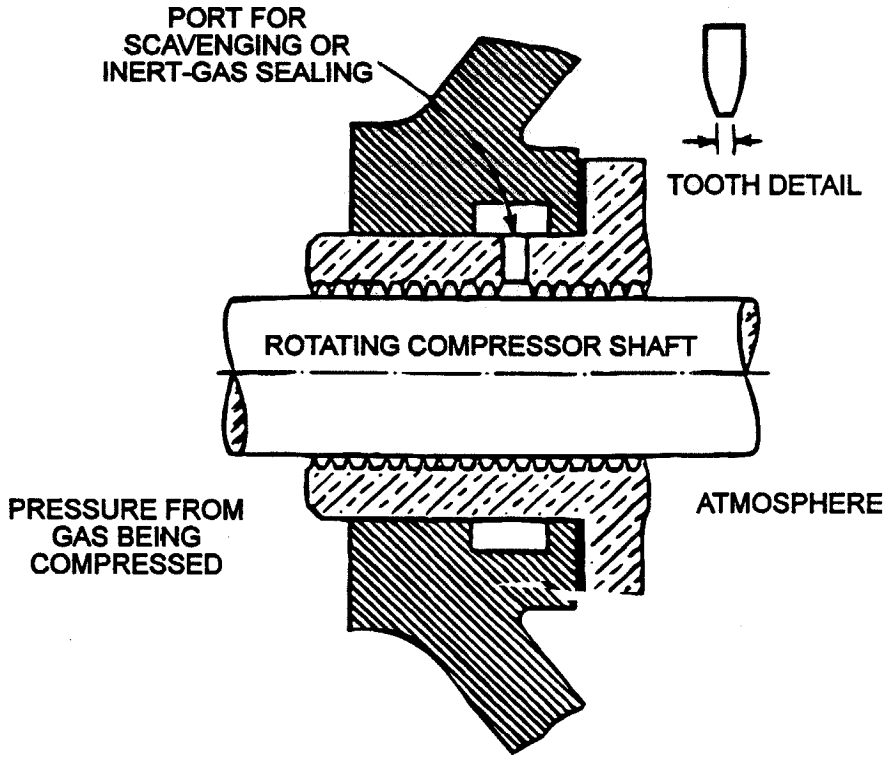

Figure 301.9
Labyrinth Compressor Seal

301.7 RULE DISCUSSION

This section discusses the various rules which are intended to reduce fugitive VOC emissions from valves, flanges, pumps, compressors, and other components. The regulations governing fugitive VOC emissions can generally be divided into five categories:

- Leakage limits
- Self-inspection requirements
- Leak repair requirements
- Component identification
- Recordkeeping

301.7.1 Leakage Limits

EPA Method 21 measures the concentration of a gaseous hydrocarbon leak mixed with ambient air at a short distance (one centimeter or less) from the emission point. Each district and the EPA has determined a threshold leak concentration(s), a leakage limit, above which a leak is in violation. A leak above this limit must be repaired promptly. If the leak is discovered by a district inspector, a Notice of Violation (NOV) or a Notice to Comply must be issued.

Tables 301.1A through 301.1E list the leakage limits for the USEPA and for the four California districts with refineries. For gaseous leaks, these limits vary from district to district and they vary depending on whether the source is a valve, pump, compressor, or relief valve. Some districts define major leaks and minor leaks and have different repair requirements depending on the size of the leak. For liquid leaks, the rules consistently define a leak as three drops per minute.

A few related rules have also been placed in the leakage limit tables (301.1A, B, C, D, and E). Some districts have rules which require the replacement of repeat leakers with BACT equipment. Some prohibit open-ended lines and require them to be sealed with a blind flange, plug, or cap: A simple closed valve is not considered adequate for leak protection. Some districts recognize that even well maintained facilities may have some leaking components at any given time and the rules allow a small percentage (one percent for example) to leak and require that an NOV be issued for each leaker in excess of the allowance.

301.7.2 Self-Inspection Requirements

All districts have rules requiring the refineries to inspect their own valves, flanges, pumps, compressors, etc. periodically for fugitive emissions. These rules are listed in Tables 301.2A through E. Although the rules vary from district to district, typically all accessible components must be inspected every three months with a hydrocarbon analyzer. Also they must be inspected within a few days of leak repair or other related maintenance. Relief valves must be inspected within a few days of a release to atmosphere.

Inaccessible valves or components are usually only required to be inspected once per year. Inaccessible components are usually defined as components that are located over fifteen feet above ground when access is required from the ground or any component located over six feet away from a platform when access is required from the platform.

Some districts also require a "look and listen" inspection of pumps, compressors, and relief valves much more frequently, as often as once per eight-hour shift. Follow-up inspections using an analyzer are then required for leaks detected by sight or sound. Self-inspection of closed vent systems are also necessary. Most districts require that these inspections be documented and that the records be available for inspection.

301.7.3 Leak Repair

All districts require the operator to repair excessive leaks promptly, within the times specified in the rules. These rules are listed in Tables 301.3A through E. The allowable repair period varies by district and can depend on the size of the leak, type of equipment, heavy oil or light service, and self detection or district inspector detection.

Some leaking components can be essential and non-repairable. The repair of these components can often be delayed until the next process unit shutdown. The leak must be minimized and by some district rules, the component must be replaced by BACT at the next shutdown.

301.7.4 Component Identification Requirements

Some districts require that all valves, pumps, compressors, etc. that contain VOCs must be tagged to identify them to the district inspector and to simplify inspection. These rules are listed in Tables 301.4A through C. Minor and or inaccessible components can sometimes be identified on drawings which are available to the inspector. Some districts do not require component identification.

301.7.5 Recordkeeping and Reporting

All districts require that records be kept for all detected leaks and repairs and that they be available for inspection for two to five years. Some districts also require documentation for each self-inspection. A periodic summary report to the district may be required. Most facilities are also required to report significant releases and atmospheric relief valve releases. These rules are listed in Tables 301.5A through E.

301.7.6 Federal (NSPS) Regulations

Fugitive emissions are regulated by the Environmental Protection Agency (EPA) and by local California air pollution control districts. The EPA's regulations for fugitive emissions are under Title 40 of the Code of Federal Regulations (40CFR), Part 60, Subpart GGG. Part 60 includes the New Source Performance Standards (NSPS) and Subpart GGG is the Standards of Performance for Equipment Leaks of VOC in Petroleum Refineries. You may note that Subpart GGG often refers back to Subpart VV, Standards of Performance for Equipment Leaks of VOC in the Synthetic Organic Chemicals Manufacturing Industry, and most of the regulations discussed here are actually found in Subpart VV. The NSPS regulations for fugitive emissions from refineries apply only to facilities which were built or modified after January 4, 1983. Local districts are responsible for enforcing both the local rules and the NSPS regulations.

Many of the district standards for fugitive emissions are similar to the NSPS regulations, but most district regulations apply to all refining facilities, regardless of when they were built. All of the district rules refer to EPA Method 21, Determination of Volatile Organic Compound Leaks, as the accepted method for measuring fugitive leaks. Method 21 is found in 40CFR 60 Appendix A and is also included for your reference in the appendices of this manual.

301 FUGITIVE EMISSIONS

Table 301.1A Federal (NSPS) Leakage Limits for Facilities Built or Modified after January 4, 1983	
Regulation	Limit
60.482-2 (b)(1) Pumps	Leak: 10,000 ppm expressed as methane above background concentration measured one cm. or less away from leak.
60.482-3 Compressors	Barrier fluid system or closed vent system is required for all facilities built or modified since 1-4-1983. Compressors with emissions less than 500 ppm are exempt.
60.482-4 Relief valves	No detectable emissions above 500 ppm. No emissions above 500 ppm 5 days or more after pressure release.
60.482-6 Open-ended lines	Open-ended valves or piping must have a cap, blind flange, plug or second valve unless 60.482-1(c) is satisfied.
60.482-7 Valves	No hydrocarbon emissions above 10,000 ppm.
60.482-8 Heavy liquid service	No leaks over 10,000 ppm allowed for pumps or valves in heavy liquid service, pressure relief devices in light or heavy liquid service, flanges and other connections.
60.482-10 Closed vent systems & control devices	Vapor recovery systems must have at least 95% efficiency. Combustion devices must destroy VOCs with 95% efficiency or have a minimum residence time of .75 sec at 816 degrees C or more. Flares used to comply shall meet the requirements of 40CFR 60.18. No emissions over 500 ppm. Closed vent systems shall be monitored initially and annually thereafter.

Table 301.1B BAAQMD Leakage Limits	
Regulation	Limit
8-18-112 natural gas	Effective 7/1/93 until 7/1/95, rule 8-18-400, 401, 402 shall apply to valves carrying commercial natural gas.
8-18-302 Valves	Leakage limit (until 12/31/96): 500 ppm expressed as methane above background concentration measured one centimeter or less away from leak. Leakage limit (starting 1/1/97): 100 ppm expressed as methane above background concentration measured one centimeter or less away from leak.
8-18-303 Connectors	Leakage limit (until 12/31/96): 500 ppm expressed as methane above background concentration measured one centimeter or less away from leak. Leakage limit (starting 1/1/97): 100 ppm expressed as methane above background concentration measured one centimeter or less away from leak.
8-18-305 New or replaced valves	(Effective 1/1/95 until 1/1/97): Any valve except control valves, that is new or one that has been repaired or replaced (8-18-304) must not leak in excess of 100 ppm for 4 consecutive quarters.
8-18-306 Repeat leaker valves	(Effective 1/1/93 until 1/1/97) Any valve, except control valves, or connector found to be leaking 2 times in a 12 month period by the APCO in excess of the standard shall comply with 8-18-304 (replacement) and 8-18-305 (new limits).
8-18-307 Liquid leaks	(Effective 1/1/93): Any valve or connector dripping total organic compounds at a rate greater than 3 drops a minute is a violation.
8-25-302 Pumps	Leakage limit (starting 1/1/93): 1000 ppm expressed as methane above background concentration measured one centimeter or less away from leak. Leakage limit (starting 1/1/97): 500 ppm expressed as methane above background concentration measured one centimeter or less away from leak.
8-25-303 Compressors	Leakage limit (starting 1/1/93): 1000 ppm expressed as methane above background concentration measured one centimeter or less away from leak. Leakage limit (starting 1/1/97): 500 ppm expressed as methane above background concentration measured one centimeter or less away from leak.
8-25-305 New or replaced equipment	(Effective 1/1/95) Any new, repaired or replaced pump or compressor, except reciprocating or gear pumps, shall not leak in excess of 500 ppm for 4 consecutive quarters.
8-25-306 Repeat leaks	Any pump or compressor found to be leaking 2 times in a year by the APCO shall comply with 8-25-304 (replacement) and 8-25-305 (new limits).
8-25-307 Liquid leaks	(Effective 1/1/93): Any pump or compressor dripping total organic compounds at a rate greater than 3 drops a minute is a violation unless the leak has been discovered by operators, minimized in 24 hrs., and repaired in 7 days.
8-28-301 Relief valves	Leak: 10,000 ppm expressed as methane above background concentration measured one centimeter or less away from leak. Leak is illegal unless: emissions are vented to a 95% efficient vapor recovery system, valve is protected by a rupture disc, static upstream pressure exceeds the setpoint of the pressure relief valve, or leak has been identified by the operator and minimized within 15 days and repaired at the next turnaround.

Table 301.1C SCAQMD Leakage Limits	
Regulation	Limit
1173	supersedes rules 466, 466.1 and 467
1173.b.10	Major Gas Leak: detection of gaseous VOCs in excess of 10,000 ppm as methane above background concentration. Minor Gas Leak: detection of gaseous VOCs in excess of 1,000 ppm but not more than 10,000 ppm as methane above background concentration.
1173 b.10.C Relief valves	Major gas leak from the vent of an atmospheric pressure relief device is defined as detection of gaseous VOCs in excess of 200 ppm as methane above background concentration.
1173.b.14	Liquid Leak: The dripping of liquid VOCs at a rate of more than three drops per minute.
1173.c.3	Open-ended lines and valves at the end of lines shall be sealed with a blind flange, plug, cap or a second closed valve.
1173.c.2	Major gas leaks numbering in excess of the Leak Thresholds below are a violation:

Component	Max. No. of Leaks 200 or less inspected	Max. No. of Leaks more than 200 inspected
valves	1	0.5%
pumps	2	1%
compressors	1	1
relief valves	1	1
other	1	1

Table 301.1D SJVUAPCD Leakage Limits	
Regulation	Limit
464.2.II.F all components	Leak: a reading on a portable hydrocarbon detector, in excess of 10,000 ppm above background concentration, measured one centimeter away. Liquid leak: the dripping of liquid VOCs at a rate of more than three drops per minute.

Table 301.1E
SLOCAPCD Leakage Limits

Regulation	Limit
417.B.15	Major Gas Leak: detection of gaseous VOCs in excess of 10,000 ppm as methane above background concentration.
417.B.16	Major Liquid Leak: a visible mist or continuous flow of fluid.
417.B.17	Minor Gas Leak: detection of gaseous VOCs in excess of 1,000 ppm but not more than 10,000 ppm.
417.B.18	Minor Liquid Leak: a leak of more than 3 drops per minute.
417.D.5	Open ended lines and valves shall be sealed except during specified operations.
417.D.6	Hatches shall be closed except during specified operations.

Table 301.2A
Federal (NSPS) Inspection Requirements
for Facilities Built or Modified after January 4, 1983

Regulation	Limit
60.482-2 (a)(1) Pumps	Visual inspections for liquid leaks conducted weekly. Pumps checked for leaks monthly with an analyzer.
60.482-7 Valves	Valves must be checked monthly with an analyzer. Valves that have not leaked for 2 successive months may be inspected quarterly.
60.482-10 Closed vents	Closed vent systems shall be monitored initially and annually thereafter.

Table 301.2B BAAQMD Inspection Requirements	
Regulation	Limit
'8-18-401	All connectors opened during a turnaround must be reinspected 90 days after unit start-up. Accessible valves shall be inspected quarterly. Inaccessible valves shall be inspected once per year. Any valve or connector may be inspected at any time by the APCO. Any valve or connector found to have a leak shall be reinspected within 24 hrs. after leak repair or minimization.
'8-25-401	Regulated pumps and compressors shall be inspected within 7 days after leak repair. Any regulated pump or compressor shall be inspected quarterly.
'8-25-403	Any person subject to the rule shall visually inspect all pumps handling VOCs daily. Leaks shall be measured with an analyzer.
8-28-401 relief valves	Venting from a pressure relief valve subject to 8-28-301 (one that is in gas or light liquid hydrocarbon service)shall be reported to the APCO by the next working day.
8-28-402 relief valves	Regulated pressure relief valves shall be inspected quarterly unless: emissions are vented to 95% efficient vapor recovery system, valve is protected by a rupture disc, or pressure relief valve is inaccessible.

Table 301.2C SCAQMD Inspection Requirements	
Regulation	Limit
1173.e.1	Look and listen for leaks from all accessible pumps, compressors, and pressure relief devices once during every eight hour operating period.
1173.e.2	All accessible components shall be inspected quarterly.
1173.e.3	All inaccessible components shall be inspected annually.
1173.e.4	Pressure relief devices shall be inspected within 14 days after relief.
1173.e.5	If all components (not including pumps and compressors) have had no major gas or liquid leaks for 5 consecutive quarters, inspections may be conducted annually.
1173.e.6	Inspection shall revert to quarterly if leaks in excess of thresholds are discovered.
1173	Repaired or replaced components shall be inspected within 30 days.

Table 301.2D
SJVUAPCD Inspection Requirements

Regulation	Limit
464.2.IV.A.1	All pumps and compressors carrying VOCs shall be inspected once every 3 months.
464.2.IV.A.2	Pumps shall be visually inspected weekly.
464.2.IV.B.1	When a leak is observed, it will be checked in 3 days with an analyzer.

Table 301.2E
SLOCAPCD Inspection Requirements

Regulation	Limit
417.D.1.b	Look and listen for leaks from all accessible pumps, compressors, and pressure relief devices once during every eight hour operating period.
417.D.1.a	Leaks shall be quantified using EPA Method 21.
417.D.1.c	All accessible components shall be inspected quarterly by EPA Method 21.
417.D.1.d	All inaccessible components shall be inspected annually. Pipe fittings shall be inspected after being placed in service and semi-annually thereafter.
417.D.1.e	Pressure relief devices shall be inspected within 3 days after a relief.
417.D.1.g,h	Special conditions allowing facilities with no leaks to inspect annually.
417.D.3	Repaired or replaced components shall be inspected within 30 days.

Table 301.3A Federal (NSPS) Leak Repair Requirements for Facilities Built or Modified after January 4, 1983	
Regulation	Limit
60.482-2(a) Pumps	Leaks must be repaired within 15 days unless 60.482-9 (Delay of repair) applies.
60.482-3 Compressors	Leaks will be repaired within 15 days unless 60.482-9 (Delay of repair) applies.
60.482-7 Valves	Leaks shall be repaired in 15 days unless 60.482-9 (Delay of repair) is met. First attempts at repair must be made in 5 days.
60.482-8 Heavy liquid service	Leaks shall be repaired within 15 days. First attempts at repair must be made within the first 5 days of leak detection.
60.482-9 Delay of repair	Repair delay until the end of process unit shut down will be granted if repair is technically infeasible. Delay of repair is allowed for equipment isolated from servicing volatile products. Delay of repair for valves is allowed if emissions resulting from immediate repair are larger than those that would result from a delay of repair. Hydrocarbons emitted from repairs should be collected, recovered or destroyed.

Table 301.3B
BAAQMD Leak Repair Requirements

Regulation	Limit
8-18-302 Valves	Leaks discovered by the operator must be minimized within 24 hrs. and repaired in 7 days. Leaks discovered by the APCO must be repaired in 24 hrs.
8-18-303 Connectors	Leaks discovered by the operator must be minimized within 24 hrs. and repaired in 7 days.
8-18-304 Valves	Valves that cannot be repaired to meet Non-repairable 8-18-302 (under valves & connectors) must be repaired or replaced within 5 years or at the next scheduled turnaround (whichever comes first). The total number of valves awaiting repair shall not exceed the following percentages of regulated valves. These percentages will be effective by the following dates: 1/1/93 - 2%, 1/1/95 - 1%, 1/1/97 - 0.5%
8-18-306 Repeat leakers	(Effective 1/1/93 until 1/1/97) Any valve, except control valves, or connector found to be leaking 2 times in a 12 month period by the APCO in excess of the standard shall comply with 8-18-304 (replacement) and 8-18-305 (new limits).
8-18-307 Liquid leaks	Liquid leaks discovered by operators must be minimized in 24 hrs. and repaired in 7 days.
8-18-402 Leak Tagging	Valves and connectors with a leak shall be tagged with a brightly colored weatherproof tag indicating the date the leak was detected.
8-25-302 Pumps	Leaks discovered by the operator must be minimized within 24 hrs. and repaired in 7 days. Leaks discovered by the APCO must be repaired in 24 hrs.
8-25-304 non-repairable equipment	(Effective 1/1/93) Any pump or non-repairable compressor that cannot be repaired as pumps and required by 8-25-302 or 303 (above) must meet the following: 1. The pump or compressor must be repaired or replaced in 5 years or at the next scheduled turnaround (whichever is first). 2. The number of regulated pumps and compressors awaiting repair shall not exceed the following percentages. The percentages are effective by the following dates: 1/1/93 - 10%, 1/1/97 - 1%
8-25-402 Leak Tagging	Any pump or compressor with a leak that has been detected by the operator and is awaiting repair must be identified in a manner that is readily observable.

Table 301.3C
SCAQMD Leak Repair Requirements

Regulation	Limit
1173 Repair schedule	Leaks must be repaired within the following times: minor gas leaks -14 days, major gas leaks - 5 days, gas leaks over 50,000 ppm - 1 day, liquid leaks 1 day.
1173 Repeat leakers	After a component has been subjected to 5 repairs from major leaks in a 12 month period, it will be replaced with the Best Available Control Technology (BACT) or vented to an air pollution control device.
1173 Delay of repair	If essential leaking pumps and compressors can't be repaired in 15 days, then - the leaking device can be replaced and must be inspected in 3 days, or emissions can be vented to a 95% efficient vapor recovery device or flare, or the device can be repaired during the next process unit shutdown, but no later than one year after leak detection.

Table 301.3D
SJVUAPCD Leak Repair Requirements

Regulation	Limit
464.1 Repairs	Any leaking valve, pressure relief device, flange, threaded connection, or process drain must be repaired or vented to a flare satisfying 40 CFR 60.18 or a 95% efficient vapor control device.
464.1	Pumps and compressors that leak must be repaired in 15 days.
464.1 Delay of Repair	If a leak cannot be repaired to a leak-free condition without shutting down essential equipment the following applies: 1) If a leak is less than 10 drops a minute, the repair shall be done as soon as possible by the next process turnaround and within the next year. The control officer shall be notified of the expected repair date and the actual date the component is repaired. 2) If a leak is greater than 9 drops per minute or 10,000 ppm, emergency repair to reduce the leak to less than 10 drops a minute or 10,000 ppm shall be conducted within 15 days or the emission shall be vented to a complying flare or vapor control device within 30 days of detection. The control officer shall be notified of emergency repair or venting.
464.2.IV.B.1	Leaking devices must be repaired in 15 days. If device is essential and cannot be repaired, operator may: (a) replace device or (b) vent emissions to a 95% efficient vapor recovery system or (c) repair during next shutdown, but in less than 1 year.

Table 301.3E
SLOCAPCD Leak Repair Requirements

Regulation	Limit
417.D.2.a Repair schedule	Leaks must be repaired within the following times: minor gas leaks -14 days major gas leaks - 5 days major gas leaks over 50,000 ppm - 1 day major liquid leaks - 1 day minor liquid leaks - 2 days
417.D.2.b	All leaks shall be immediately minimized to the extent possible.
417.D.2.c Delay of repair	If a critical component cannot be repaired, the leaking device shall be replaced with BACT during the next process unit shutdown, but no later than two years after leak detection.
417.D.4 Repeat leakers	After a component has been subjected to 5 repairs from major leaks in a 12 month period, it will be replaced with the Best Available Control Technology (BACT).

Table 301.4A
BAAQMD Identification Requirements

Regulation	Limit
8-18-402 Valve identification	All valves must be labelled with an identification code used to refer to the location and records corresponding to it. Valves and connectors with a leak shall be tagged with a brightly colored weatherproof tag indicating the date the leak was detected.
8-25-402 Leak Tagging	Any pump or compressor with a leak that has been detected by the operator and is awaiting repair must be identified in a manner that is readily observable.
'8-28-401 Relief valve vent reporting	Venting from a pressure relief valve subject to 8-28-301 (one that is in gas or light liquid hydrocarbon service)shall be reported to the APCO by the next working day.

Table 301.4B
SCAQMD Component Identification Requirements

Regulation	Limit
1173.d.1	All major components must be identified for inspection, repair, replacement, and recordkeeping.
1173.d.2	All minor components shall be identified in piping and instrumentation flow diagrams and/or grouped together for inspection, repair, replacement, and recordkeeping.
1173	Any pump or compressor that leaks shall be tagged.

Table 301.4C
SLOCAPCD Component Identification Requirements

Regulation	Limit
417.D.7.a	All major components must be identified for inspection, repair, replacement, and recordkeeping.
417.D.7.b	All major, critical, inaccessable, and unsafe to monitor components (except fittings) shall be identified in diagrams for inspection, repair, replacement, and recordkeeping.
417.D.1.i	Any leaking component shall be tagged and dated.

Table 301.5A Federal (NSPS) Recordkeeping Requirements for Facilities Built or Modified after January 4, 1983	
Regulation	Limit
60.486.c Leaks	When a leak occurs, operators shall enter the following information into a log which is to be kept for 2 years: 1. component identification code 2. date leak was detected and dates of each attempt to repair 3. repair method used in each repair attempt 4. "Above 10,000" if leak is above 10,000 ppm 5. "Repair delayed" and reason if delayed for more than 15 days 6. signature of person who determined that a shutdown is required for repair 7. expected date of repair in the case of delays 8. dates of process unit shutdowns that occur while equipment is unrepaired 9. date of successful repair of leak
60.486.d Closed vent systems	For closed vent systems, the following information should be recorded in a log and available for inspection: 1. detailed schematics, design specifications, piping and instrument diagrams 2. dates and descriptions of any design changes 3. monitoring parameter details, how monitored and why selected 4. dates of startups and shutdowns
60.486.e All equipment	For all subject equipment, the following information should be recorded in a log and available for inspection: 1. a list of equipment identification numbers 2. a list of equipment designated for no detectable emissions 3. a list of relief valve identification numbers 4. the date of each compliance test with concentration and background level 5. a list of identification numbers for equipment in vacuum service
60.486.f Unsafe- and difficult-to-monitor valves	For unsafe-to-monitor and difficult-to-monitor valves, the following information should be recorded in a log and available for inspection: 1. a list of identification numbers for "unsafe-to-monitor" valves with explanation and monitoring plan 2. a list of identification numbers for "difficult-to-monitor" valves with explanation and monitoring plan
60.486.g Complying valves	For complying valves, the following information should be recorded in a log and available for inspection: 1. schedule of monitoring 2. percent of leakers during each monitoring period
60.486.h, i	Special case recordkeeping requirements for VOC sensors and for verification of equipment not containing VOCs.

Table 301.5B
BAAQMD Recordkeeping and Reporting Requirements

Regulation	Limit
8-18-502 Valves	Operators shall maintain records with the following information: 1. identification code, valve type and location 2. dates of all inspections with leak concentrations
'8-18-502.3	Records shall be available for inspection for 5 years.
'8-18-502.4 Non-repairable valves	Operators shall maintain records with the following information: identification code, valve type and location, dates of all monthly inspections with leak concentrations, last turnaround date, and the total number of valves awaiting repair.
8-28-401 Relief valve vent reporting	Venting from a pressure relief valve subject to 8-28-301 (one that is in gas or light liquid hydrocarbon service)shall be reported to the APCO by the next working day.

Table 301.5C
SCAQMD Recordkeeping and Reporting Requirements

Regulation	Limit
1173.g	Standard forms are provided by the district for record reporting and must be submitted periodically.

Table 301.5D SJVUAPCD Recordkeeping Requirements	
Regulation	Limit
417.F.1	Operators shall maintain records with the following information: a. name, location, type of component, description of unit where leakers are found b. date of leak detection, concentration, method of leak detection c. date and concentration of re-check after repair d. list of leaks that cannot be repaired until next turnaround e. total number of components inspected, percentages of leakers by component type
417.F.2, 3	Records shall be available for inspection for 2 years.

Table 301.5E SLOCAPCD Recordkeeping and Reporting Requirements	
Regulation	Limit
417.F.1	Operators shall maintain records with the following information: a. name, location, type of component, description of unit where leakers are found b. date of leak detection, concentration, method of leak detection c. date and concentration of re-check after repair d. total number of components inspected, percentages of leakers by component type
417.F.2, 3	Records shall be available for inspection for 2 years.
417.F.1	On or before Feb.1 each year, the operator shall submit a report to the APCO on the previous years inspection and maintenance activities which: a. summarizes inspection log entries b. lists all leaking components not repaired in 15 days and those awaiting a unit turnaround for repairs

301.7.7 Exemptions

Components carrying steam, water, or almost any other liquid or gas that does not contain volatile organic compounds (VOCs) are exempt from fugitive emission rules. Since 7/1/93, commercial natural gas lines are not exempt from district regulations in the BAAQMD. Only components carrying organic substances that exhibit more than ten percent evaporation at 150°C (according to ASTM Method D-86) are regulated by most districts. If you suspect that an exempt line does contain VOCs, you should take a sample for analysis.

Components operating under negative pressure are exempt; they usually will not emit any pollutants. If a component is buried in the ground, it may also be exempt from fugitive emission rules.

301.8 PRE-INSPECTION PROCEDURES

It is important to do your homework for the inspection prior to your visit to the site. This section is a discussion of some general guidelines on what steps to follow prior to the inspection.

301.8.1 File Review

Prior to the site inspection, the inspector should review all information available in the district source files including: approved permits, equipment lists, conditions for each permit, previous inspection reports, Notices of Violation, breakdown reports, enforcement actions taken, complaints, variance histories, alternative emissions control plans, abatement orders, and processes involved at the facility.

The inspector may wish to complete some portions of the inspection documentation before arriving at the facility, as this will save time during the pre-inspection meeting. If your district has checklists or rule specific forms, use them.

301.8.2 Regulation Review

You should review any references to the specific rule which are noted in the source files. In particular, be familiar with each standard and exemption in the rules that apply to the equipment you will inspect. Discuss the regulations with experienced personnel and review any policies your district may have. Make sure that you receive consistent interpretations on how to apply the requirements of the rules.

301.8.3 Equipment Check

Make sure that you have the following equipment available for use during the inspection: vision protection, hearing protection, safety shoes, fire retardant coveralls, hard hat, gloves, identification, business cards, pens, wipes, inspection forms, chain of custody forms, hydrocarbon analyzers, hydrogen sulfide detector, fresh air pack, sampling cans, can case, labels, soap solution, and thermometer.

Make sure the battery for your hydrocarbon analyzer is charged and verify that the analyzer works properly before entering the facility. A daily span check with zero gas and a gas of known methane concentration is also recommended.

301.8.4 Pre-entry and Entry

When you arrive at the oil refinery, notice if there are any strong odors or visible emissions. If there is a visible emission or strong odor, make sure it is thoroughly documented before entering the facility. Try to find out the cause of the visible emission or odor after you have introduced yourself.

Request to see the previous contact mentioned in the files. Depending on the facility, it may be the environmental coordinator, production manager, supervisor, president, or maintenance worker. Always present your business credentials immediately to avoid confusion.

If the source is unfamiliar with your district's authority, be prepared to cite and provide copies of California Health & Safety Code (CHSC) Section 41510: Right of Entry (a copy is available in the appendix). Know and follow your district's policy when the facility refuses entry.

301.8.5 Pre-inspection Meeting

Before the inspection begins, the inspector should meet with the source representative to obtain operating information, to compare it with information on the current Permit to Operate. The inspector should state the purpose of the inspection and identify the equipment which will be inspected. Facility information can be verified during this meeting, including: the facility name and ownership, address with city and zip code, contact name, contact title, phone number and area code. Discuss safety procedures and whether or not there have been any hydrogen sulfide, odor, or other problems recently. Request a copy of any material safety data sheets (MSDS) that you may need, and if necessary, discuss sampling procedures.

You should request to see a copy of the Permit(s) for the facility and check to see if the Permit(s) is current and valid. Compare the district's current equipment list with the source's equipment list. Also, check existing Permit conditions and ask if any changes have been made to the operation which are not reflected in the Permit.

301.9 INSPECTION

The fugitive emission inspection will generally include the following steps:

- Screen as many components as possible for VOC leaks using an analyzer.
- Review records to assure that self-inspection and repair requirements have been met within the allowed time periods.
- Observe tags on leaking components to assure that they are properly dated and that the allowed time period for repair has not expired.

Inspection procedures for fugitive emissions may vary slightly due to the differences in the district rules. Some refineries in the same district may have different leak limits on the same equipment. Leakage limits that are different than the district's rule will be stated on the Permit to Operate.

Upon entering a facility, ask the operator if there are any leaking components, and when they were found leaking and tagged. These components are subject to the allowable repair period and records should be

checked for verification. All other components in the unit should not be leaking and the inspector may issue NOVs, if warranted, on the remaining components.

301.9.1 Leak Detection Methods

Inspectors must check components (valves, flanges, pumps, compressors, hatches, connections, sight glasses, meters, etc.) for leaks using a hydrocarbon detector (OVA, organic vapor analyzer, TLV, threshold limit value meter, or equivalent). An analyzer must be used to document and prove violations of excessive VOC leaks. Using the sight, smell, and hearing senses for leak detection is good for quickly surveying an area for leaks, or finding gross leaks, or when an inspector does not have an analyzer. However, an NOV for a gaseous leak could not be based on these types of observations; a documented test result from a calibrated VOC analyzer is necessary to support an NOV. A liquid leak of greater than three drops per minute can, of course, be determined without an instrument.

Leaks can be seen by applying a soap solution on a component and looking for bubbles. Another good way to detect leaks is to look for a distortion emanating from the equipment similar to the distortion seen from infrared radiation near the ground or on a roof on a hot day. Inspectors can also detect leaks by hearing them. Investigate the source of any strange unexplained hissing sounds. Always look for liquid leaks from components. If more than three drops of liquid drip from a component in one minute, and if the liquid has more than the minimum allowable VOC content, the component is considered to be leaking. These leak detection methods will be especially useful to the unit operator who is conducting the more frequent "look and listen" inspections which are always recommended and are required in some districts.

When you are conducting an inspection, note if there are any strong odors of petroleum. If there are odors, find their source. **Be extremely cautious if the odor is hydrogen sulfide; it is a lethal gas.** At low concentrations hydrogen sulfide smells like rotten eggs, but at lethal concentrations it is odorless.

301.9.2 Hydrocarbon Analyzer Use

It is important to use a hydrocarbon analyzer properly. Before you use an analyzer to check equipment for leaks, make sure the analyzer is calibrated according to the manufacturer's directions. This is typically done by warming up the instrument, setting it to zero and introducing a zero gas to the probe inlet. Then the analyzer should be tested with a calibration gas of known hydrocarbon concentration to document that it can measure hydrocarbon leaks properly. If an analyzer cannot be adjusted so that it will read a calibration gas properly, it must be repaired before it can be used for inspections.

When checking a device for a leak, move the probe slowly along the joint where a leak may be likely, holding the probe as close to the joint as possible. Look for blips in the meter reading which may indicate that you recently passed over a leak. Remember that there is a lag between the time a VOC is sucked into the probe and the time that the meter indication is observed. This lag, known as the instrument **response time**, is usually less than five or ten seconds but may not exceed 30 seconds. Efficient inspectors will usually keep the probe moving constantly along the joint and on to the next joint until he notes a blip in the meter. They will then go backwards and retest the likely source of the leak. If they cannot find the source of the blip, they move on; if a leak is located, they stop and measure the concentration using Method 21.

The concentration is measured by finding the highest sustainable concentration of the leak. Find the point at the interface where the leak is highest and vary the angle of the probe to maximize the concentration. Try to block the wind from the area you are checking and you will get better results. Read the maximum concentration that you can maintain for several seconds, not just the peak of a spike. When the concentration is determined, subtract the background concentration measured one meter or ten feet upwind (depending on the district).

In 40 CFR (Code of Federal Regulations) Part 60, appendix A the EPA has included Method 21 (Determination of Volatile Organic Compound Leaks). Method 21 contains information about the accepted methods for determining hydrocarbon leaks from valves, flanges, pumps, compressors, accumulator vessel vents, agitator seals, access doors, and other process equipment. Method 21 contains definitions, minimum specifications for an analyzer, and

procedures for properly using an analyzer. A copy of Method 21 is also included in appendix B of this manual. Refer to Method 21 for specific information regarding the calibration and use of analyzers.

301.9.3 Inspection of Components

The components (valves, flanges, pumps, compressors, meters, connections etc.) are areas where hydrocarbons can escape into the atmosphere from refinery equipment. Most companies are required to check their valves and other components regularly for leaks. There may be thousands or tens of thousands of components at a facility and most inspectors won't have time to check all of them for leaks. The inspector may elect to inspect parts of the facility with emphasis on those process units handling light hydrocarbons and/or hydrocarbons under high pressure. Components carrying light hydrocarbons under high pressure are most prone to leaks.

Check the company's records to see which components are leaking, what percentage of them are leaking, and which ones have been fixed. Your district may allow a small percentage of leaking components and will allow a period of time for a facility to fix the leaks. Check your district regulations for specific rules regarding the leakage and repair of components.

When leaks are found, the components must be tagged and documented so that the leaks won't be lost and can quickly be identified. The leaking components must then be repaired within the allowed time period.

Some components do not need to be checked for emissions. Components carrying steam, water or other fluids with less than 10% VOC by weight do not need to be checked. This may be verified by the origin of the flow or by taking a sample. Components that are hazardous or inaccessible may not need to be checked. An inaccessible component is one that is located fifteen feet above the ground when access is required from the ground or a location that is over six feet away from a platform when access is required from the platform. Components that are underground, under negative pressure, being repaired or totally enclosed from the environment do not need to be checked.

Inspecting Valves

First observe the valve for liquid leaks. A liquid leak violation is defined as three drops per minute but pay special attention to valves that appear wet with oil around the packing gland, flanges, etc. or valves that are dripping at less than three drops per minute. These valves are also likely sources of high concentrations of gaseous emissions.

Valves should then be checked with a hydrocarbon analyzer by passing the probe inlet through the areas where there is a high probability of leakage. Valves most often leak at the seal between the stem and housing. Put the probe as close as possible (within one centimeter) to the valve stem where it comes out of the packing gland, and move the probe around the whole circumference of the stem. The stem is often coated with grease which can plug the probe and incapacitate the analyzer, so use caution. Check the circumference of the lower part of the packing gland in the same manner. Move the probe along flanged connections and any other threaded connection or interface to see if there are any leaks.

If a leak is detected, determine the concentration according to Method 21. Make sure that an operator properly tags, dates, and documents the leak. Count each valve checked on a tally sheet and document any leaks for your own records. Check the background concentration one meter or more upwind from the hydrocarbon source if a leak is found. There are a vast number of valves in a unit which are subject to the fugitive emissions regulations. An inspector will have to work rapidly in order to check a large percentage of them.

Inspecting Flanges

Flanged connections carrying hydrocarbons should be checked by running the probe of the analyzer between the flanges where the gasket is located around the whole circumference of the flange. Some leaks have also been detected at the connecting bolts. Flanges do not leak nearly as often as other components and there are more flanges than any other potential source. In most cases, the inspector's time is best utilized by randomly testing a smaller percentage of the flanges while concentrating on pumps, compressors, atmospheric relief valves, and valves.

Inspecting Pumps and Compressors

Pumps and compressors most commonly will leak where the drive shaft enters the housing. Run the probe as close as possible to the stuffing boxes surrounding the shafts, checking for any leakage readings on the gauge of the hydrocarbon analyzer. Make sure you check the whole circumference of all shafts. If the whole shaft periphery can't be analyzed, sample as much of the circumference as possible.

Look for liquid leaks emanating from the stuffing boxes of pumps. Also there are often valves and flanges located near pumps and compressors that are subjected to vibration and pressure surges. These valves and flanges should be checked for leaking hydrocarbons. If a leak is detected, determine the concentration according to Method 21. Make sure that an operator properly tags, dates, and documents the leak. Count each inspected pump or inspector on a tally sheet and document any leaks. Check the background concentration one meter or more upwind from the hydrocarbon source if a leak is found.

Caution must be exercised when the probe of an analyzer is put close to moving shafts. **Do not touch the surface of a rotating or reciprocating shaft with the probe of an analyzer.** If the probe touches the shaft, sparks could form and fire could occur. Touching a shaft with a probe could also score and damage the shaft, making your district liable for costly repairs.

Inspecting Pressure Relief Devices

Pressure relief devices which relieve to the atmosphere should be inspected regularly and within the allowable time period after they have opened. Check for hydrocarbon leaks by passing the probe of an analyzer around the pressure relief device near where the gases vent. Many relief valves have a vent pipe which directs the vented gases upward and away from equipment or personnel. Many of these vent pipes have a weep hole at the bottom to allow rain water to drain out. A small hydrocarbon gas leak will also drain out of this weep hole since most hydrocarbons are heavier than air. The weep hole is usually the best place to put your analyzer probe when checking for leaks.

If a leak is detected, determine the concentration according to Method 21. Make sure that an operator properly tags, dates, and documents the leak. Count each inspected relief-valve on a tally sheet and document any leaks. Check the background concentration one meter or more upwind from the hydrocarbon source if a leak is found.

Other Equipment

Sight glasses, meters, and other devices can be sources of hydrocarbon emissions. Sight glasses should be checked by running the probe along the outside of the sight glass where it connects to the equipment. There may be a rubber seal around the outside of the glass to help prevent leaks. Check meters by running the probe where the gauge connects to the equipment it is monitoring. If there are any connections in the metering device that come in contact with hydrocarbons, they should be checked.

301.9.4 Recordkeeping

Facility operators are required to keep records by district regulations and in Permits to Operate. Records are often used to determine compliance or are used as evidence of violations. Recordkeeping will vary with the requirements of the rule and with each source.

For valves, connections, flanges and other leaky components the following records should be kept by facility operators.

1. The names, locations, types of components, and descriptions of any units where leaking components are found.

2. The dates leaks are detected, emission levels (ppm) of leaks, and methods of detection.

3. The dates and emission levels of recheck after leaks are repaired.

4. The total number of components inspected, and the total number and percentage of leaking components found by component types.

5. The frequency of the inspections (quarterly or annually).

There are also some newer innovative methods of recordkeeping that can be used for refineries. Records of emissions from leaking components can be kept by computer. A number of different software packages are available to be used for keeping emission records. By using an identification tag on components, the size, style, type, use, and location of a component can be easily identified. Tags with bar codes, punch holes or identification numbers can be used to identify a component and quickly do an inspection on it.

When an inspector also uses a data logger with a hydrocarbon analyzer, emissions read from the analyzer can automatically be recorded for a leaking component. Using advanced component identification methods and computer software for recordkeeping makes recordkeeping faster and more efficient. Innovative recordkeeping also helps reduce human error in records.

301.10 POST-INSPECTION PROCEDURES

Prior to leaving the facility, the inspector should evaluate the compliance status of the facility and should have obtained all the information necessary to complete the inspection form. Make sure you have acquired all the necessary documents to determine the compliance of the refinery operation.

The facility should be informed of the results of the inspection, advised of areas of concern where additional information or investigation is needed, or given a Notice of Violation (NOV) as soon as possible. Be prepared to make your compliance determinations, calculate excess emissions, and issue all necessary violation notices. Be able to document future NOVs which may be pending due to sample results or additional information requests. **All violations should be followed up**, consistent with your district policy, to ensure that the source is brought into compliance. Make sure you have obtained all the information necessary to complete the inspection form, and acquired all the necessary documents to determine the compliance of the refinery operation.

302 STORAGE TANKS

302.1 INTRODUCTION

Tanks are used at petroleum refineries to store crude oils, intermediate oil products, finished products, and wastes. There are numerous intermediate products in a refinery and they may include different types of LPG (liquefied petroleum gas), gasolines, kerosenes, diesels, gas oils, and fuel oils. The wastes include wastewater, spent acids, spent caustic, and oily sludges. If proper precautions are not taken (that is if the air quality regulations are not followed), the fluids stored in these tanks can give off large amounts of hydrocarbons and other odorous compounds to the atmosphere.

The three main types of pollutants from storage tanks include hydrocarbon vapors (volatile organic compounds or VOCs), odors, and aerosols or mists. Large quantities of hydrocarbon vapors can be released from petroleum storage tanks. Hydrocarbons react with nitrogen oxides (NOx) in the presence of sunlight to create ozone (O_3), California's most prominent air pollution problem. Some of the stored liquids are malodorous and odors often result in public complaints. Emissions of aerosols often occur during the filling of storage tanks with hot asphalts and appear as a smoky visible emission. Oxidation of the asphalt followed by condensation of moisture in the hot gases upon entering the cooler atmosphere is the main cause of mists and aerosols.[2]

The predominant types of storage tanks found in a refinery include:

- fixed-roof tanks,
- external floating roof tanks,
- internal floating roof tanks,
- conservation tanks and
- pressure tanks.

This section is designed to help you, the field inspector, to conduct a complete and efficient inspection of fixed roof tanks, external floating roof tanks, internal floating roof tanks and conservation tanks. Pressure tanks will generally have emissions only from fugitive sources (valves, atmospheric relief valves, compressors, etc.) Pressure tanks can usually be inspected using the methods discussed in section 301, Fugitive Emissions, and will not be discussed in detail here.

302.2 OPERATION OF PETROLEUM STORAGE TANKS

Storage tanks are used to allow the various refinery process units to receive a constant and uniform supply of feed and to allow them to produce a constant supply of product, in spite of fluctuations in overall feed supply and product demands. For example, crude oils are usually received in large batches, from a tanker ship perhaps, and the tanks are quickly filled. The crude distillation unit then usually runs at a fairly constant rate and the tanks are slowly emptied.

Fixed roof tanks are large cylindrical vessels covered by a stationary roof. As the tank is filled with liquid, vapors and air are pushed out of the tank through vents in the roof. As the liquid is removed from the tank, air or gas again enters the tank through the roof vent. If a fixed roof tank is used to store volatile hydrocarbons, large quantities of vapors can be generated and emitted to the atmosphere. Many fixed roof tanks which store volatile oils must be connected to a vapor recovery system.

The roof of a floating roof tank actually floats on top of the liquid stored in the tank. The roof has large compartments (pontoons) which are filled with air or foam and give the roof buoyancy. Because the roof is always in contact with the liquid, there is very little exposed liquid and fewer vapors are generated. There is still some exposed liquid around the edge of the roof and seals are used to prevent emissions from these edge areas. Floating roof tanks can store most refinery liquids except those with high volatility (above 11 psia true vapor pressure, TVP).

Conservation tanks are used to contain products in a vapor state or in a vapor and liquid state. The products in a conservation tank are under very low pressures. Conservation tanks are sometimes used in vapor recovery systems and they are sometimes called "vapor holders."

Pressure tanks are rigid pressure vessels. The products stored in them may include very light hydrocarbons such as methane, ethane, propane, or butane. These products are gaseous at atmospheric pressure and may be under very high pressures in the tanks to keep the material liquid.

Tanks are operated between a maximum **safe fill** level and a minimum safe level, called the **heel**. Older tanks may be corroded or weakened and are no longer strong enough to be safely filled to the brim. After being derated by

metallurgical inspectors, the safe fill level for these tanks may be many feet below the rim. The safe fill level for a new fixed roof tank might be a few inches below the rim. For a floating roof tank, the safe fill might be a few inches below where the roof seal would rise above the tank rim. The heel for a fixed roof tank could be the level slightly above where a transfer pump would lose suction. The heel for a floating roof tank would likely be slightly above where the roof legs touch the floor, or more accurately, above where the vacuum breaker leg touches the floor. These components will be discussed in more detail later.

Most of the air quality regulations are directed at tanks storing volatile hydrocarbons and they require various types of vapor control equipment. Tanks containing wastewater, spent acid or spent caustic may be **exempt** because they are not expected to contain oils. However, the waste waters, acids and caustics are often contaminated with petroleum and can be a large source of hydrocarbon emissions and odors. A tank of spent caustic, for example, might have a layer of gasoline on top. The tank serves as a large settling chamber which allows the emulsified gasoline, which could not otherwise be removed from the caustic, to rise to the top and separate out. Special care must be taken when considering contaminated by-product or waste tankage for exemption from vapor controls.

The external tank equipment of interest to the air quality inspector includes:

- the sample hatch,
- pressure-vacuum relief valves (also called PV valves),
- the level gauge,
- the water draw,
- sample lines,
- tank mixers,
- temperature gauges or thermocouples,
- swing line system,
- primary and secondary floating roof seals,
- the roof drain, and
- the emergency roof drain.

You should become familiar with these components as you read this section.

302.2.1 Fill, Suction, and Swing line

A pipeline called a **fill line** is used to fill a tank and the **suction line** is used to empty a tank. Both lines have isolation valves and they usually connect to the tank near the bottom. Sometimes a tank may have only one line for both fill and suction. Oil is usually drawn out of the tank from at least one foot above the bottom. This space below the suction inlet provides room for the collection of sediment and water.

In some processes, it is essential that the oil from a storage tank be free of water (in other words dry). Water in the oil feed to some units can upset the process, causing down time and revenue losses. In order to prevent water from getting into the feed, a device called a **swing line** can be used (Figure 302.1).

A swing line is a pipe or hose that is connected to the suction line on one end and to a buoyant pontoon device on the other. The pontoon holds the inlet of the swing line up toward the top of the petroleum liquid. Water, which is denser and heavier than oil, tends to sink to the bottom of the tank and cannot exit the tank. An articulated joint or swivel connects the swing line to the suction line and allows the inlet of the swing line to be moved up and down (or in other words "swing"). The level of the pontoon on the end of the swing line can be adjusted by a cable and a series of pulleys that leads to a cable reel at the bottom of the storage tank. As the level of the tank contents changes, the level of the swing line can float with the pontoons or can be adjusted by operators with the cable reel.

The swing line is internal and is generally not an item for inspection. It is described here because failure of the swing line can lead to breakdowns, unit upsets, flare episodes, odors, etc. The inspector should be aware that swing line problems may include sinking pontoons, tangled cables, and swivel joint leaks and that these components may be named as a cause in a breakdown report.

302.2.2 Manual Gauging of Tank Contents

It is imperative that a refinery keep track of the level of the liquid in a tank at all times. If a tank gets too full, product can pour from the top of the tank causing a fire hazard, a loss of valuable product, and a big mess. If a

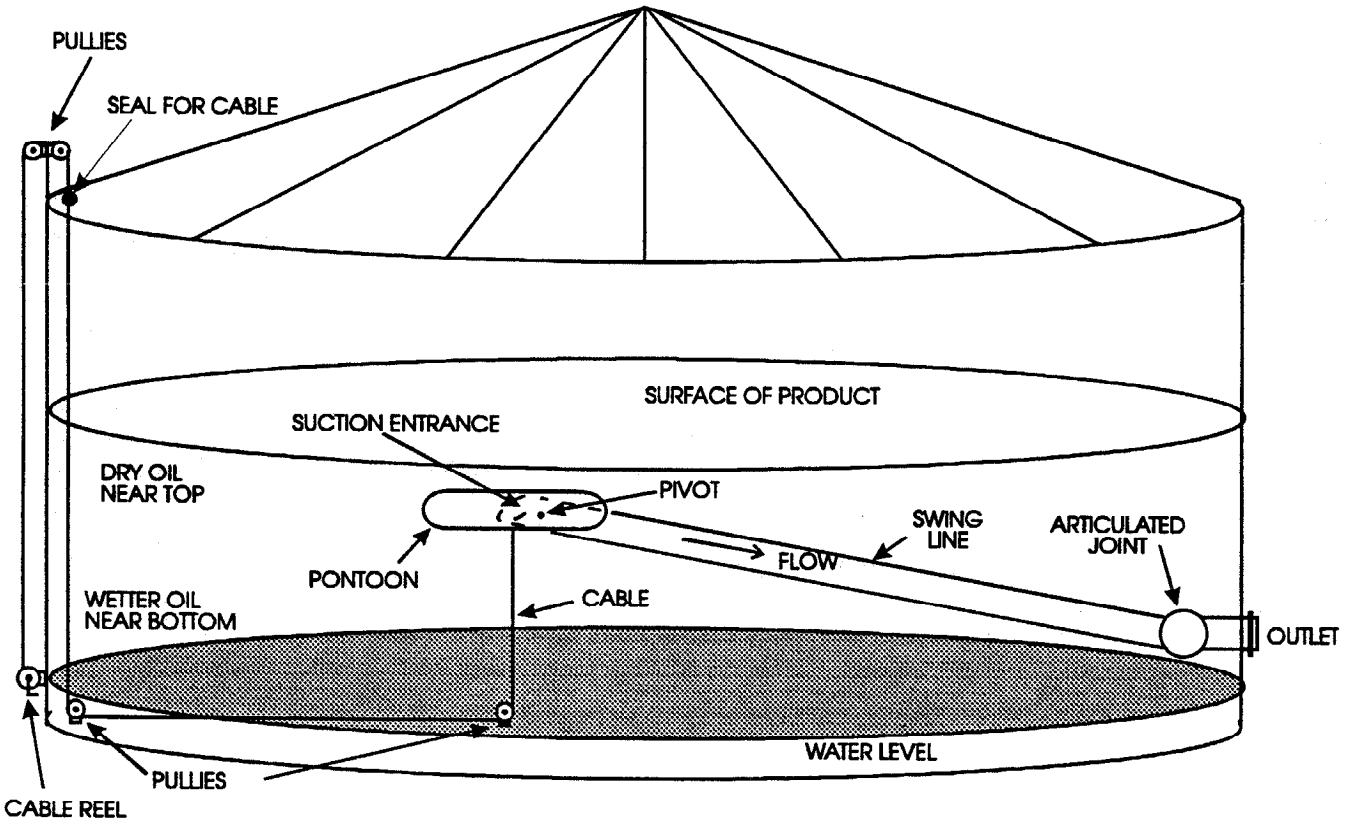

Figure 302.1
Swing Line System
on Fixed Roof Petroleum Storage Tank

tank gets too low, many problems can result. There could be an unexpected loss of feed to a process unit which might cause an emergency shutdown. Loss of suction to a pump will cause cavitation which can damage the pump and cause the pump seals to leak. If a floating roof gets too low, the roof may damage internal parts or a vacuum may be formed which could damage the roof seals.

In order to keep track of the level of the contents in a tank, to verify automatic gauges, and to prevent accidents, operators periodically gauge the height of the contents manually. Operators measure the level of the contents with a **tape gauge**. They lower a tape measure with a weight or plum bob at the end into the tank through the sample hatch until it hits the bottom of the tank. The tape gauge is graduated so the level of the contents can be read when the tape is pulled out of the tank.

The amount of water in a storage tank can also be measured manually with the tape gauge. The operator applies water indicator paste to the tape before lowering it to the bottom of the tank. The **water indicator paste** changes color when it comes in contact with water and indicates the level of water in the tank.

302.2.3 Automatic Gauging

The gauging process has also of course been automated and most tanks are equipped with a mechanical gauge. The most common gauge consists of a float that sits on the liquid, a wire that runs up through the roof and over the tank edge and down to the gauge near ground level. A spring and coil in the gauge keep the wire taut and the float level determines the level in the tank. These are often called Varec gauges for the manufacturer. Of special interest to the air quality inspector, is that the point where the wire passes through the roof must usually be covered with a sealing device to reduce vapor emissions. The seal must also allow the wire some movement in order to measure accurately. Some tanks have level alarms connected to the level gauge to help prevent operators from allowing the tank to get too full or too low.

Another type of gauge determines the tank level based on the pressure and density of the liquid. Both of these gauges are also often tied into a computer system which can monitor tank levels and give tank level indications to the control room operator. Many tanks may also have graduations painted on the side from the ground to the rim. A large visible pointer then moves up and down with the liquid level. The pointer is connected by a wire to the roof or to a float in the tank.

302.2.4 Sampling System

Some tanks (floating roof and fixed roof) have a sampling system that consists of a series of pipes connected to the side of the tank at different heights. Valves located near the bottom of the tank can be opened to acquire a sample of the tank contents at any of the sampler levels on the tank. Some designs simply have a drain funnel underneath the valves so that excess product from the tank can be properly disposed of in the wastewater treatment system. In other designs, the pipes on the side of the tank lead to a sample circulating pump, which can be used to purge the sampling line and return excess product to the tank.

In general, sample taps must remain capped or plugged when not in use, as required by the fugitive emissions standards discussed in section 301. Drips of more than three drops per minute are not allowed.

302.2.5 Fire Suppression

Both fixed roof and floating roof tanks may have foam injection devices around the rim of the tank near the top for fire suppression. The system may also have a fire sensing device so that when a fire in the tank is detected, fire fighting foam will be injected into the tank. Four or more foam injectors may be distributed around the circumference of the tank. The system can easily be identified by the pipes (often painted red) that go up the sides of a tank and the cylindrically shaped valve on the side of the tank near where the foam is injected.

Many tanks are located in pits or have earthen walls around them to contain a tank's contents in case it ruptures, and to prevent the spread of a fire. To prevent a tank rupture from overpressure, the roof to side-wall joint on a fixed roof tank is designed to pop loose before a tank's side-walls fail.

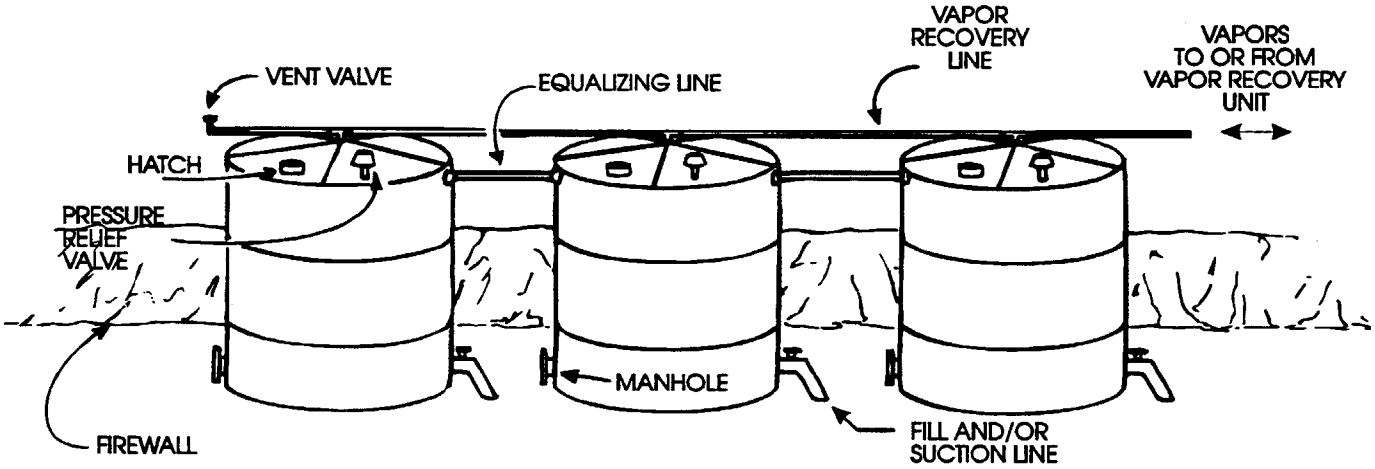

Figure 302.2
Fixed Roof Tanks
With Vapor Recovery

302.3 FIXED ROOF TANKS

Fixed-roof tanks are cylindrically shaped vessels made of steel that are welded or riveted together and covered by a stationary roof as illustrated in Figure 302.2. In some designs the roof is not made of steel; it may be made of fiberglass or a similar material. Some tanks have a fixed roof which comes to a point in the center and may be called "cone roof" tanks. Some tanks have a stationary roof and also contain an internal floating roof, but a "fixed roof" tank implies a tank with no floating roof at all. Internal floating roof tanks have different vapor control requirements and will be discussed later in this section.

302.3.1 Fixed Roof Tank Breathing Cycle

The air space above the petroleum liquid in a fixed roof tank is filled with petroleum vapors by evaporation. The higher the volatility of the tank contents, the more liquid will vaporize and fill the air space. When a tank is filling, the liquid pushes the vapors out of the tank through the pressure-vacuum relief valve (PV valve). When a tank is emptying, the tank draws in fresh air. This allows more evaporation of the product to take place and the breathing cycle is then repeated. The losses (emissions) from filling and emptying a tank are called "**working losses**".

Changes in temperature and pressure inside the tank also affect the evaporation rate of the liquid. As the sun heats the tank during the day, the evaporation rate increases and the gases in the tank expand. Vapors in the tank must be "breathed out" of the tank through the PV valve.

During the night, the tank cools and the gases inside the tank contract. In order to prevent the pressure inside the tank from getting too low, fresh air is drawn into the tank through the pressure-vacuum relief valves. Fresh air entering the tank upsets the air-vapor equilibrium in the tank, causing more vapors to evaporate. When the sun comes up again, the vapor space is warmed, it expands, and vapors are again forced out through the pressure-vacuum valves. This cycle is repeated every day and the losses from the daily heating and cooling of a tank are called "**diurnal losses.**" Other weather conditions such as atmospheric pressure, wind and rain can also affect the vapor space in the tank.

302.3.2 Fixed Roof Tank Vapor Recovery

In the past, the working vapor losses and the diurnal vapor losses were allowed to vent to the atmosphere resulting in increased air pollution, fire hazards, releases of hydrogen sulfide, odors, and production losses. Today, most fixed roof tanks containing volatile organic liquids are required to have a vapor recovery system to prevent the release of vapors to the atmosphere.

Different designs of vapor recovery systems are used at refineries, but the units are usually equipped with a compressor, a tank to store vapors, and a system of vapor collection piping. Some of the vapor storage tanks have diaphragms inside them and are called conservation tanks. A conservation tank helps keep the pressure inside constant even though the volume of vapor

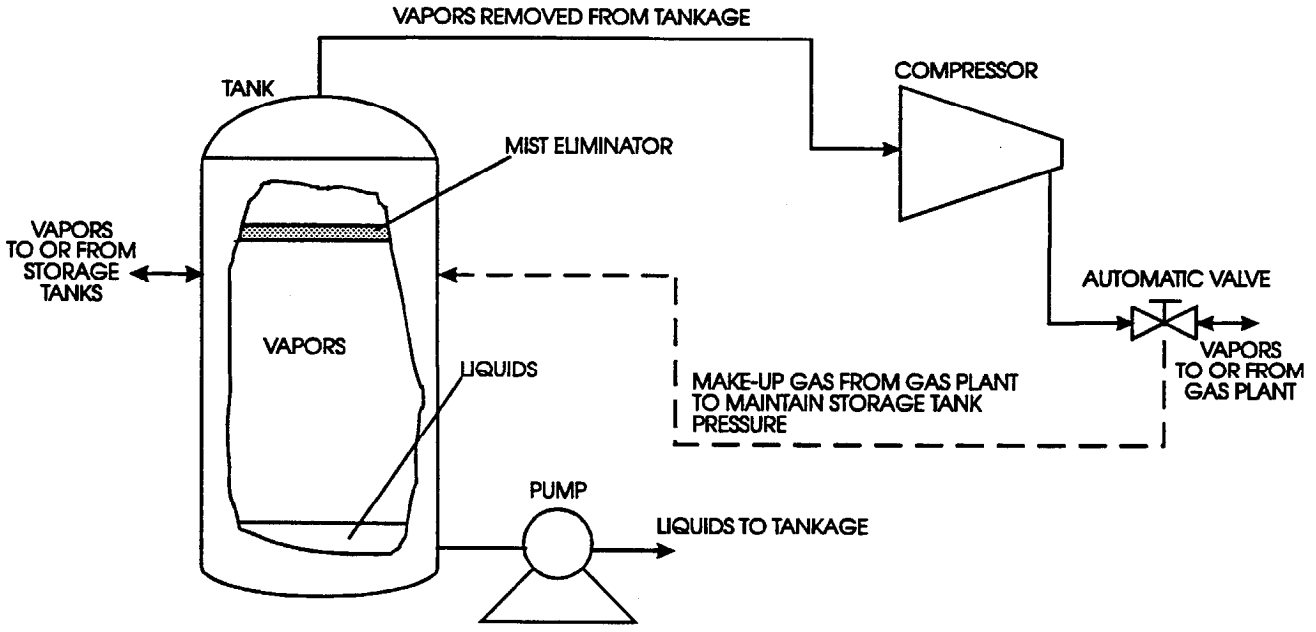

Figure 302.3
Vapor Recovery Unit

in the tank changes. A gauge on the side of the tank shows the level of the diaphragm and indicates whether vapors are being pumped in or out of the tank.

Storage tanks, loading racks, closed wastewater treatment systems and various other refinery equipment may all be connected to a vapor recovery system. The most common type of vapor recovery system uses the suction of a compressor to gather vapors (Figure 302.3). Although most refinery vapor recovery systems have compressors, some types of systems do not rely on a compressor but instead use line or process pressure to push excess gas to a combustion device such as a flare or heater firebox.

Most fixed roof tanks operate slightly above atmospheric pressure at about one inch of water column pressure or less. If the pressure in a tank were to get too low, perhaps as the tank is emptying, the roof could collapse. If the pressure in a tank were to get too high, the tank could rupture. But the vapor recovery system and pressure-vacuum relief valves are designed to

safely regulate the pressure in a tank. On tanks with vapor recovery, pressure-vacuum relief valves should only release vapors to the atmosphere or draw in air in an emergency to prevent tank damage.

A group of fixed roof tanks can be manifolded with pressure equalizing lines so that as the pressure in one tank increases, the pressure can be dissipated by the other tanks. When the pressure in the tank group gets too high, the vapor recovery system draws some of the vapors out of the tanks, compresses them and routes them to the gas plant or fuel gas system. When the pressure becomes lower than the set point, especially during oil shipping or when tanks cool at night, makeup or blanket gas, often from the fuel gas system, is introduced into the tank to maintain pressure.

Some vapor recovery compressors shut off when the pressure within tanks is within operating limits. Other vapor recovery systems run in a gas bypass mode, which prevents equipment from cycling on and off and reduces wear and tear on the equipment.

Tanks may have manometers which measure the gauge pressure (pressure relative to atmospheric pressure) within the tankage. Some vapor recovery systems have a chart recorder indicating the tankage pressure over time.

Tanks must have vapor control systems unless the true or Reid vapor pressure and hydrogen sulfide (H_2S) content are below the limits allowed in the district rules. Storage tanks that contain diesel, marine fuel oil, heavy crude or other low vapor pressure products are often stored in fixed roof tanks without vapor recovery systems. Tanks without vapor recovery will vent to the atmosphere.

302.3.3 Gas Blanketing

Fixed roof storage tanks can be fire hazards because the product inside vaporizes and can form an explosive mixture with air. Some facilities put sweet fuel gas, natural gas, or nitrogen in their storage tanks to displace any air in the tanks. This is called "**gas-blanketing**" and reduces such air related problems as explosive hazards and corrosion.

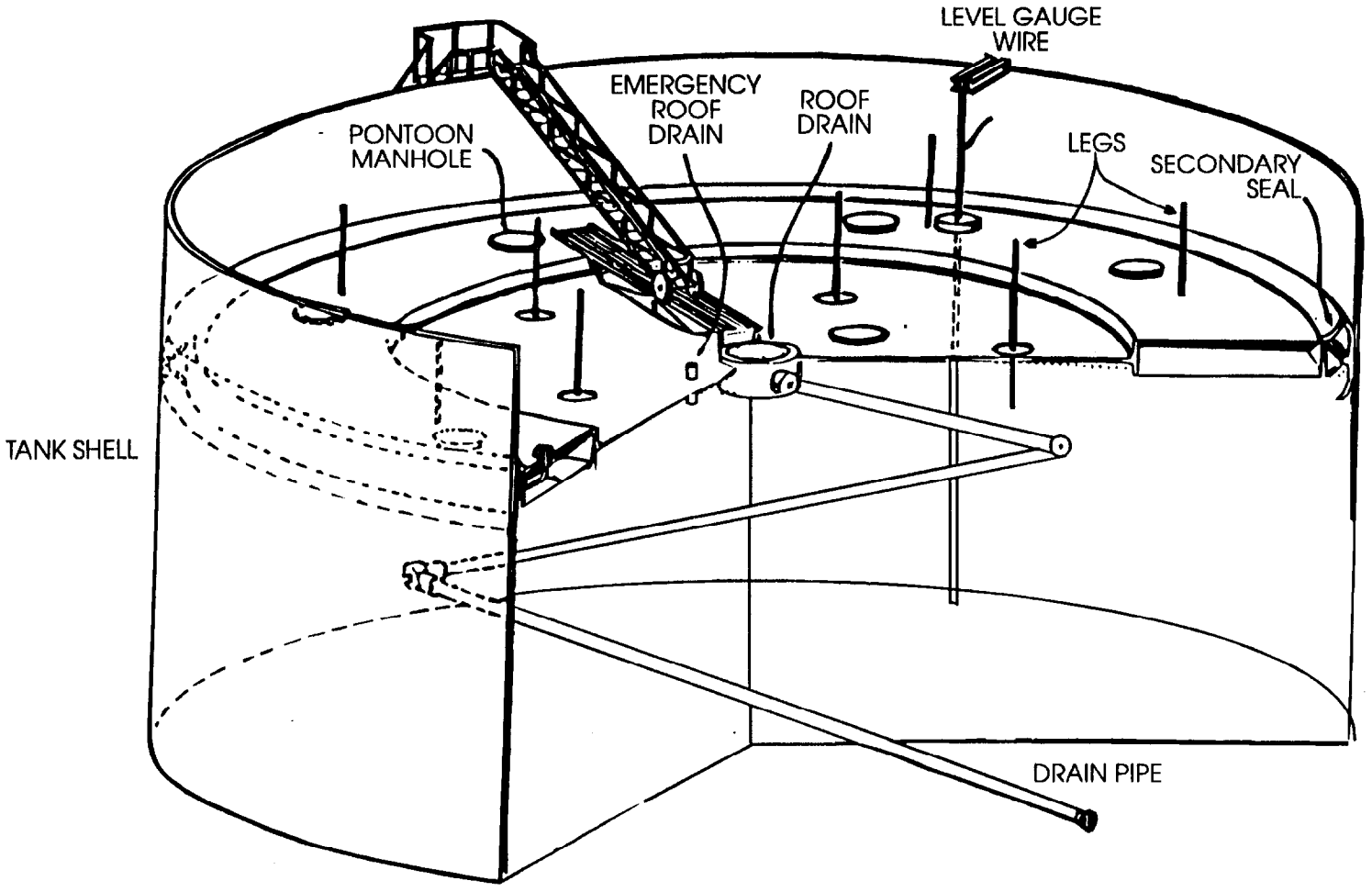

Figure 302.4
External Floating Roof Tank With Pontoon

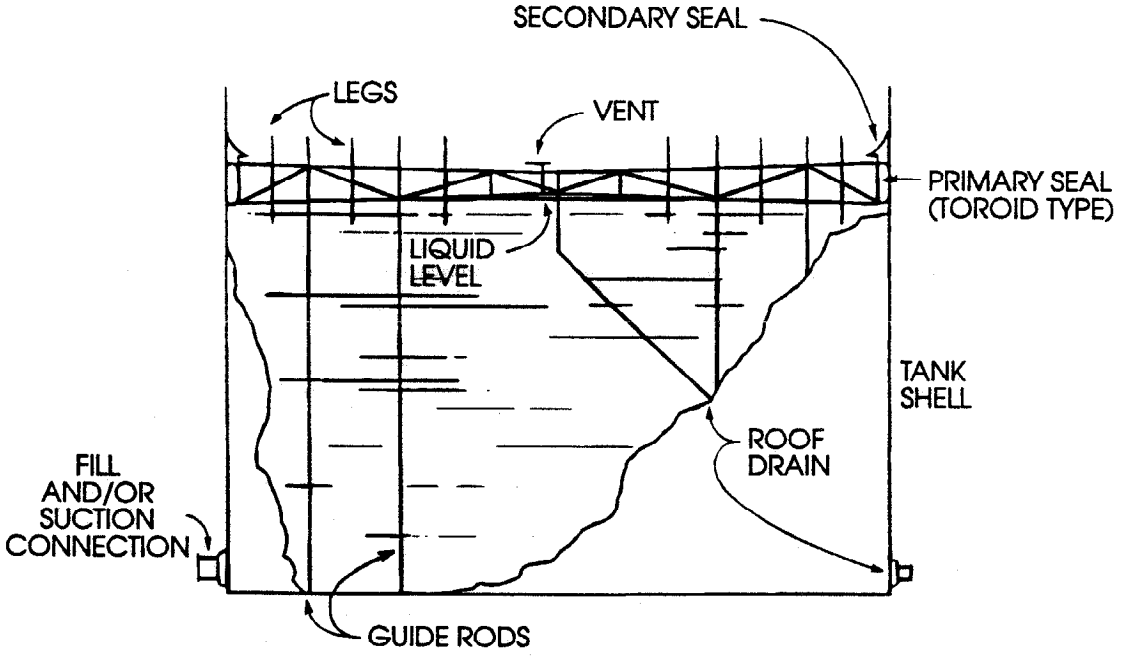

Figure 302.5
Double Deck Floating Roof Tank

302.4 FLOATING ROOF TANKS

Different types of floating roof tanks are used in a refinery; parameters such as the liquid being stored, weather, and cost help determine the tank needed. The two main types of floating roof tanks include those with an open or external floating roof, and those with an internal or covered floating roof. Although the inspection techniques must be different due to roof access, the air quality regulations often treat both external and internal floaters alike, with similar roof seal requirements.

Open roof tanks or "external floaters" are very common at many refineries. These tanks often have a roof that floats on top of petroleum products by means of a pontoon (Figure 302.4). The pontoon is usually a hollow ring on the rim of the roof designed to provide flotation of the roof to accommodate loads from rain, snow, and workers. A similar design, the double deck roof, has increased rigidity and decreased heat transfer to the product from the sun (Figure 302.5)[1]. The product is then kept cooler, reducing the vapors that form in the tank. The air inside the roof of a double deck floating roof tank provides flotation for the roof.

In the past, external floating roof tanks were sometimes built with a pan roof that had a single steel deck directly contacting the product. Tanks with this design required considerable trussing to prevent the roof from buckling.[2] Solar heat on the metal roof resulted in higher vaporization losses. Hydrocarbons would boil away and escape from the opening around the periphery of the roof resulting in production losses and increased pollution. Practically all external single deck pan roofs in California have been replaced by pontoon roofs or double deck roofs.

Internal floating roof tanks have a rigid roof covering the roof or deck floating on top of the product (Figure 302.6)[1]. The advantage of this design is that dirt, rain, water drainage and snow accumulation problems are reduced. On the other hand, inspection and maintenance can be more difficult since it is harder to reach and see the roof. Some internal floating roof tanks have single decks or pan roofs with no pontoon. In order to keep the roof afloat, the roof may be made with Styrofoam, or other low density material, sandwiched between two layers of steel. A roof of this type of design is usually not designed to support the weight of a person.

Floating roof tanks also have wicking and wetting emissions. **Wicking emissions** are from the capillary action of the tank contents creeping up the tank wall and up the outer side of the sealing ring onto the tank roof.[2] **Wetting emissions** result from product adhering to the tank walls and evaporating into the atmosphere after the roof has dropped from the emptying of the tank.

302.4.1 Floating Roof Tank Seals

The design of the floating roof controls emissions by eliminating the vapor space in the tank and minimizing the amount of hydrocarbons exposed to air. The liquid in the tank should be completely sealed off from the atmosphere. This prevents evaporation and vent emissions. The roof seals are very important for prevention of production losses, odors, and hydrocarbon emissions. The floating roof itself is designed so that there will be about an eight-inch annular space between the tank shell and roof. Two seals are used around the edge of the roof to cover this annular gap. The lower seal is called the primary seal and the upper seal is called the secondary seal. Secondary seals are visible on the outside rim of the roof and the primary seal can be inspected by pulling back the secondary seal.

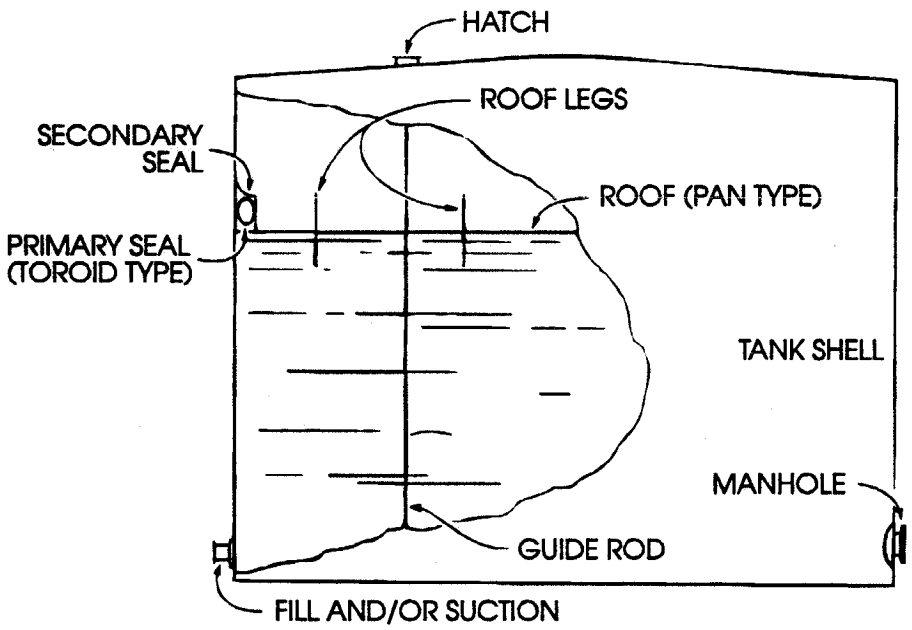

Figure 302.6
Internal Floating Roof Tank

Primary Seal

The lower seal, located closest to the product in the tank, is called the primary seal. The primary seal covers the product in the annular space around the circumference of the roof. This reduces the surface of liquids exposed to the atmosphere at the edge of the roof to a width of a fraction of an inch around the perimeter. The smaller exposed surface area reduces the rate of vaporization of the stored liquid and reduces hydrocarbon emissions.

The common designs of primary seals include the metallic-shoe-type seal and the resilient-toroid-type seal. The **metallic-shoe-type seal** is the most common design (Figure 302.7). In the metallic-shoe configuration, the roof is connected to a metallic shoe or sealing ring by a linkage. The shoe is a series of sheet-metal plates that completely encircle the floating roof. A counter weight and linkage provide a force that pushes the shoe toward the tank shell. Some metallic-shoe designs use springs to provide the shoe force. A primary seal fabric material is then bolted between the tank roof and the top of the shoe covering the annular space between the shoe and the floating roof. A rim vent (PV valve) is often used to protect the primary seal by venting pressures or vacuums beneath the seal.

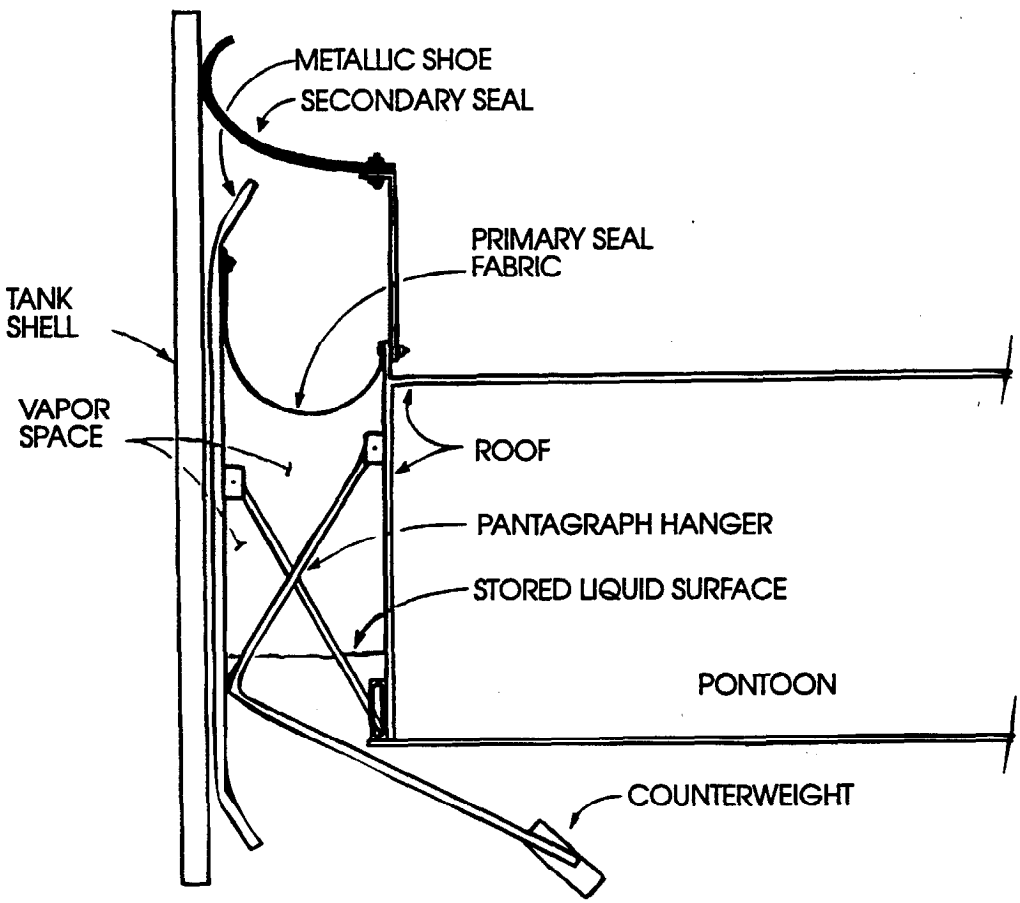

Figure 302.7
Metallic Shoe Seal

The resilient-**toroid seal** has a fabric tube for the primary seal (Figure 302.8). The tube usually has a urethane foam log inside, providing a sealing surface force against the tank shell. The tube may also be filled with air (an inflated tube seal) or a liquid (a liquid-filled tube seal).

Secondary Seal

Several secondary seal designs exist, but they generally consist of a rubber or fabric material bolted to a series of sheet metal sections that are in turn bolted to the tank roof. The rubber or fabric material scrapes against the

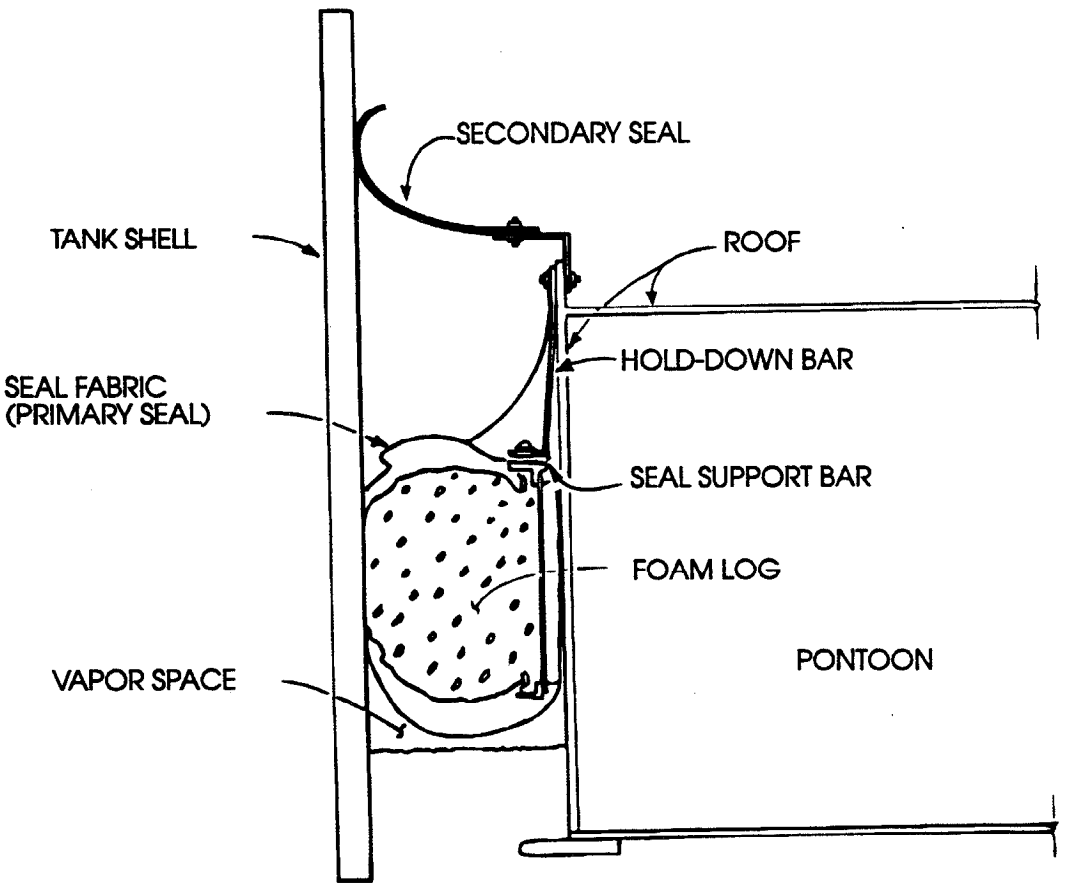

Figure 302.8
Resilient-Toroid-Type Seal

tank shell and is called either the wiper blade or the wiper fingers, depending on the design. In most cases, the secondary seal curves up from the roof and contacts the tank shell. The force against the tank shell is supplied by this slight bend in the sheet metal. Some other secondary seals consist only of a large rubber wiper which extends from the roof to the tank shell. Selection of a secondary seal design does not usually depend on the type of primary seal installed.

Many of the vapors that get past the primary seal may still be kept in the tank by the secondary seal. The secondary seal also helps reduce the amount of wetting emissions by wiping away oils adhering to the tank shell as the roof descends.

In most districts, the secondary seal must be connected to the tank roof and may not be attached to the primary seal. The allowable gap between the secondary seal and the tank shell is only a small fraction of an inch, depending on the district, the type of tank shell, and other criteria (see Rules section which follows). Most districts also require that the secondary seal be capable of allowing a limited inspection of the primary seal, usually by pulling the secondary seal a few inches from the tank shell. Some districts also require that the secondary seal be removed every five years or so to facilitate a complete inspection of the primary seal.

302.4.2 Sample Hatches

The sampling hatch for some open roof floating roof tanks may be different than the hatch for fixed roof tanks. The sampling hatch may not be located on the roof. A platform with a stairwell is located above the tank rim and some tank designs have a pipe called the **sampling well** that goes from the platform through the floating roof, to the bottom of the tank. A float with a snug rubber seal must be kept in a slotted sampling well to prevent emissions and production losses. The float is connected to a chain so that it can be removed for sampling. Some sample wells may be made of solid pipe and may be capped with a typical hatch cover door. The sampling well also allows the liquid level to be gauged and prevents rotation of the roof.

Some external floating roof tanks have the sampling hatch directly on the floating roof. A chain typically reaches from the hatch cover to the platform for opening the hatch from above. The sample thief, gauge tape, etc. is then

lowered from the platform into the hatch. The sample hatches on internal floating roof tanks are similar to those on external floaters and can be accessed directly from the top of the tank.

302.4.3 Drains

External floating roof tanks must be designed so that rainwater will not collect on the roof. The additional weight from rainwater could sink the roof. Most designs have a drain in the middle of the roof with a flexible hose connected to it (Figure 302.4). The hose goes down through the product to a valve on the outside of the tank. When it rains, an operator will open the **roof drain** valve to allow rainwater to flow off the roof.

The internal drain hose has the potential to leak; in this case petroleum would leak into the drain hose. This is usually detected as oil dripping from the roof drain valve and the valve would then be kept closed, except when it is raining. Roof drain leaks can sometimes also be detected on the top of the roof by vapors coming from the drain grating. These vapors would normally be detected and measured using a hydrocarbon analyzer.

Floating roof tanks are also equipped with an **emergency roof drain** in case the normal roof drain is blocked or closed. It does not take a large accumulation of rain water on the roof to sink the roof and a roof drain valve can accidentally be left closed or the drain can become blocked by leaves, plastic, etc. Operators normally keep the drain valves closed on tanks with leaking drain hoses.

The emergency roof drain is generally a cylindrically shaped pipe that goes down through the floating roof into the stored liquid. Water that flows through the emergency roof drain will simply flow into the stored liquid to the bottom of the tank. In order to prevent emissions of hydrocarbons to the atmosphere, the top of the drain must have a cover. In order to allow the passage of water through the cover, the cover must have holes in it. Most regulations call the cover a "slotted membrane fabric cover" and require that it cover 90% of the drain area.

The **water draw** is used to drain accumulated water from the bottom of the tank to the process sewer. In most cases, an operator will stand by to closely monitor the water draw operation because there is a potential to drain large amounts of oil to the process sewer. Since the water draw valve also

keeps oil from draining from the tank, most districts require that when not in use, the water draw line must be plugged, capped, or equivalent to prevent fugitive leaks. A drip of three drops per minute of hydrocarbon from the water draw would also be considered a violation of the fugitive emissions rules.

302.4.4 Roof Legs

Floating roofs have legs to support the roof at low levels and prevent it from dropping onto and damaging internal tank equipment. The legs can be extended to provide headroom when a tank is emptied for maintenance work or the legs can be retracted to a minimum safe height for daily operation. A space is required on the bottom of the tank for the roof drain, suction line, and other equipment. The roof legs pass through holes in the roof and are pinned into place on the top of the roof. The roof legs must usually be wrapped with a sealing fabric to prevent emissions from the holes in the roof.

302.4.5 Vents and Vacuum Breaker Leg

Floating roof tanks have vents to prevent the pressure within them from getting too high or too low. If the pressure gets too high or too low the tank could rupture or the roof could fail. Most floating roof tanks have a device called the **vacuum breaker leg**. The vacuum breaker leg is longer than the other legs on the floating roof. When the tank contents get low and the roof gets close to landing on its legs, the vacuum breaker leg touches bottom first and opens a vent, allowing air to enter the tank and preventing a vacuum and possible damage to the roof or seals. It is the policy of some districts to issue a Notice of Violation (NOV) if the tank is found operating at a low level with the vacuum breaker leg vent open.

Floating roofs have the potential to get hung up and stop floating up or down with the liquid level. For example, a leaking pontoon might cause the roof to shift from the horizontal and get wedged in tightly. Oil flow into the tank could then cause pressures high enough to damage the tank. Pressure-vacuum relief valves (PV valves) are included on floating roofs to relieve dangerous pressures or vacuums. These PV valves should not emit hydrocarbon vapors during normal operation. Since the vapor space found above the primary seal and beneath the secondary seal may be separated from the space directly below the roof, the secondary seal is often equipped with a separate PV valve to protect the seals from damage.

302.4.6 Floating Roof Pontoons

The pontoons on floating roof tanks can be inspected by workers or inspectors from the inspection ports or "pontoon manholes" located around the circumference of the pontoon (Figure 302.4). Each access is usually covered by a lid that sits over the manhole by gravity. Leaks in the pontoon can be discovered through the pontoon manholes. Looking into the pontoon manholes is generally not part of an air quality inspector's duties.

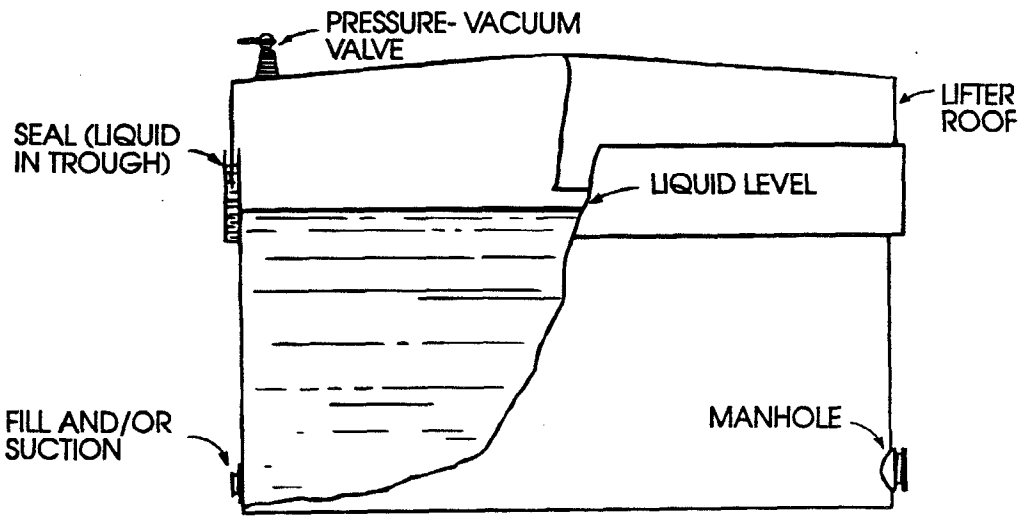

Figure 302.9
Lifter Roof Tank

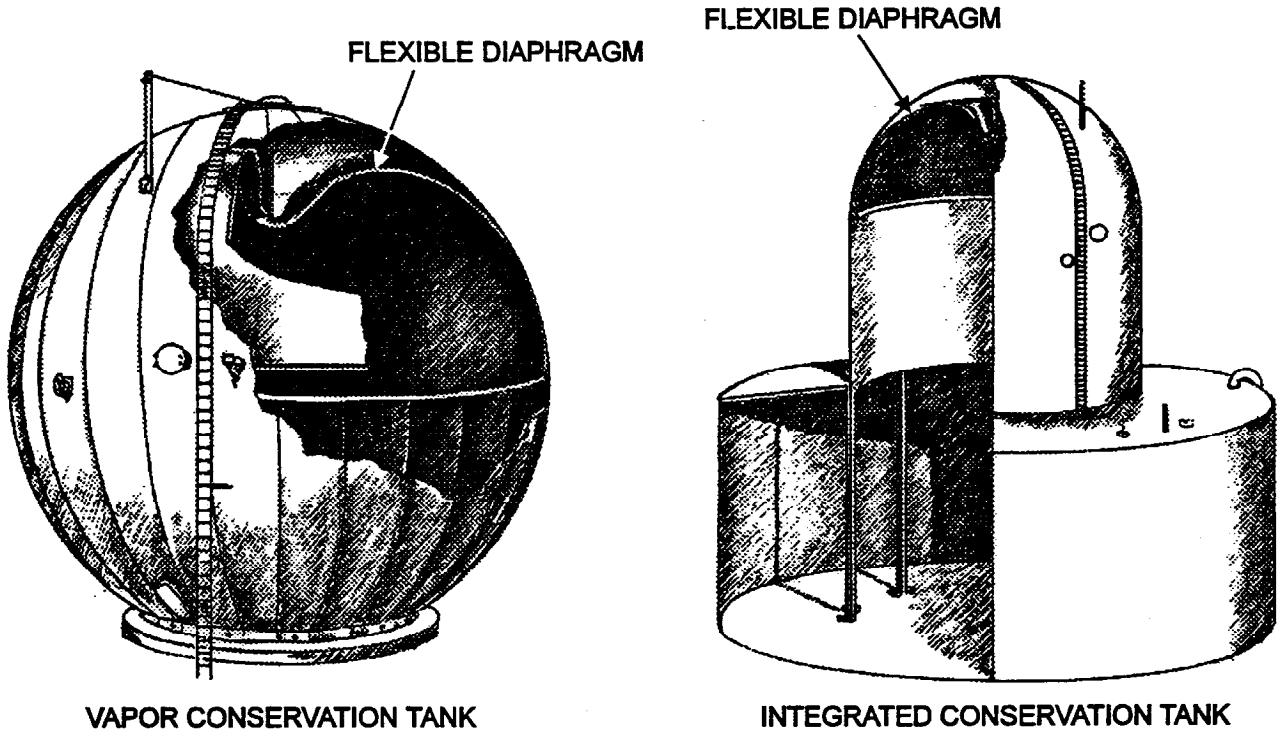

Figure 302.10
Vapor Conservation Tanks

302.5 CONSERVATION TANKS

Storage tanks with lifter roofs, internal flexible diaphragms or blankets are classified as conservation tanks. Conservation tanks may also be called "vapor holders." In the lifter roof design, the roof floats on top of the vapor in the tank (Figure 302.9). The physical weight of the roof itself floating on the vapor maintains a small positive pressure in the lifter roof tank.[2] If the roof reaches its maximum height, the vapor in the tank is vented through a pressure vacuum vent valve to prevent damage to the tank. Lifter roof tanks are used in some vapor recovery systems.

Integrated tanks and vapor tanks are two basic types of conservation tanks with internal flexible diaphragms and are illustrated in Figure 302.10. Integrated conservation tanks are used to store vapors and liquids. Liquids remain in the lower cylindrical part of the tank and vapors are stored in the upper portion of the tank between the flexible diaphragm and the liquid surface. Vapor conservation tanks are used to store only vapors and are

sometimes used in vapor recovery systems. A gauge may be connected to the diaphragm in the tank indicating the level of the diaphragm and indicating whether vapors are being pumped into or out of the tank.

Most of the equipment described earlier on fixed and floating roof tanks can be found on conservation tanks designed to contain liquids. Lifter roof tanks are equipped with hatches, clean out plates, pressure relief devices, level gauges, fill and suction lines, and fire suppression systems.

302.6 PRESSURE TANKS

Pressure tanks are a special type of fixed roof tank that are designed to operate above atmospheric pressure. Their designs include only smooth curves with no sharp corners. The main types include horizontal cylinder tanks or bullets, spheres, and spheroids as illustrated in Figure 302.11. Bullet style tanks are used for the highest pressure storage requirements. Spheres may be operated at pressures up to about 200 psig, and spheroids may be operated at 2.5 to 50 psig depending on their design (atmospheric pressure is 14.7 psia or zero psig). Light products that are gaseous at atmospheric conditions, such as butane or propane, are usually stored in these tanks.

The only inspection usually required for pressure vessel storage tanks is for fugitive emissions from **relief valves**, valves, pumps, and compressors. These tanks may also be subject to specific requirements in the Permit to Operate.

302.7 RULE DISCUSSION

The EPA has regulations for the storage of organic liquids under 40 Code of Federal Regulations (CFR), 60.110-60.113, 60.110a-60.114a, and 60.110b-60.117b (New Source Performance Standards (NSPS) Subpart K, Ka, and Kb respectively). Subpart K covers storage vessels constructed after June 11, 1973 and prior to May 19, 1978; Subpart Ka covers storage vessels constructed after May 18, 1978, but before July 23, 1984; and Subpart Kb covers storage vessels constructed after July 23, 1984. (See pages 302, 24-32)

The districts that have refineries have their own storage tank rules, but the districts have the authority to enforce EPA rules K, Ka, and Kb as well. The district storage tank rules generally have standards similar to the EPA's, but some district storage tank rules have stricter limitations.

302 STORAGE TANKS

District storage tank rules were made to limit hydrocarbon emissions from tanks that have contents with a modified Reid vapor pressure (RVP) greater than 0.5 psia in the SCAQMD and BAAQMD and 1.5 psia in the SJVUAPCD, San Luis Obispo APCD and most other districts by regulating the equipment, capacity, and maintenance required for storage tanks. These regulations describe which storage tanks, with a given capacity and vapor pressure, must have complying floating roof or fixed roof designs. The regulations give the minimum gaps in the roof seals allowed by different designs and the maintenance, testing and monitoring procedures.

The following tables (Tables 302.1A through 302.7) summarize the major storage tank requirements from the U.S. EPA, Bay Area Air Quality Management District, South Coast Air Quality Management District, San Joaquin Valley Unified Air Pollution Control District and the San Luis Obispo County Air Pollution Control District. The requirements have been sorted into the following categories:

- General vapor control equipment requirements
- Fixed roof tank requirements
- Internal and external floating roof requirements including:
  - Primary seal requirements and
  - Secondary seal requirements

For specific requirements, please refer to your district's regulations and do not assume that the tables included here are up to date or complete. These tables are included for guidance and comparison and are not intended to be an authoritative list of applicable regulations.

302.7.1 Exemptions

Tanks may be exempt from district regulations because of their size, contents, location, date of construction, maintenance and other conditions. Tanks that have a very small capacity (260 gal in BAAQMD and 30 bbl/day in SCAQMD) may be exempt. Underground tanks with submerged fill pipes might not be covered by the storage tank rule. When a tank is being cleaned, repaired, or undergoing a stock change it usually is exempt. Replacement of the tank seals and vessel degassing are common operations that temporarily exempt storage tanks from the rule. Sample hatches can be left open on tanks during gauging or sampling. Exemptions may vary with Permit requirements.

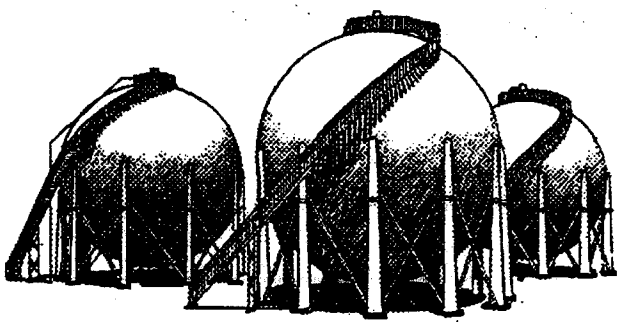

SPHERES

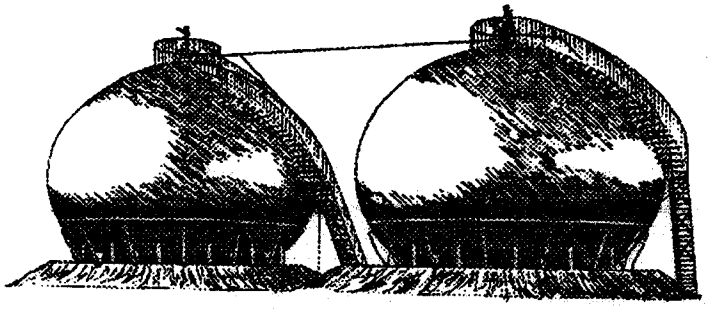

SPHEROIDS

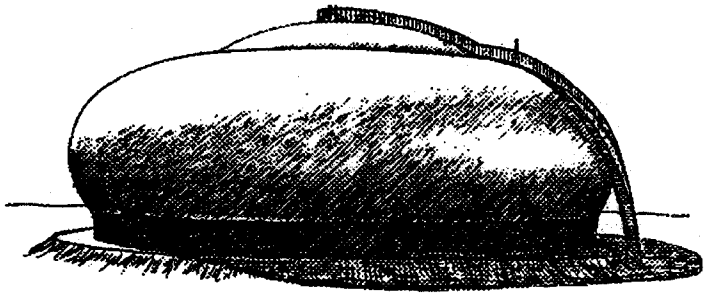

NODED SPHEROID

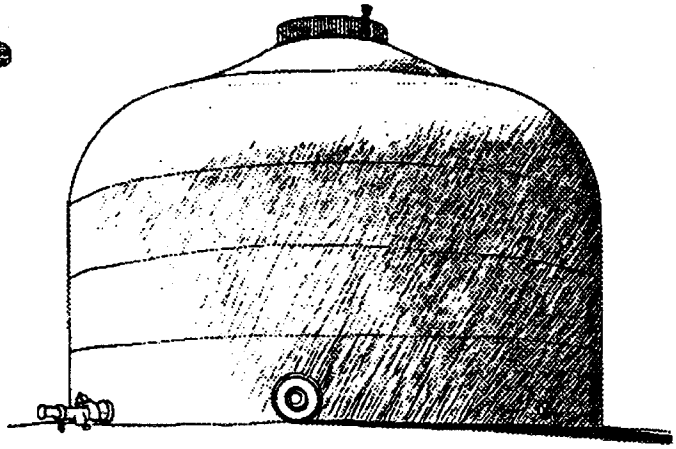

NODED HEMISPHEROID

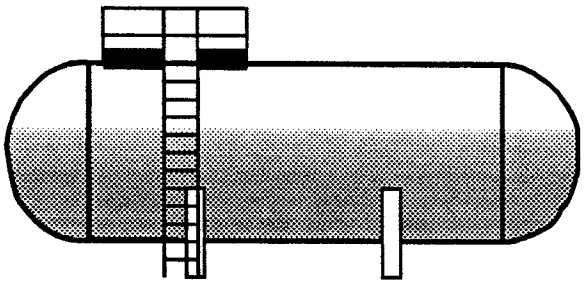

CYLINDER OR BULLET

Figure 302.11
Pressure Tank Designs

Table 302.1A EPA (NSPS) Vapor Control Equipment Requirements				
Regulation	Capacity	TVP	Date Built or Modified	Equipment Required
60.112b,a	Over 39,894 gal	0.75-11.1 psia	After 7/23/84	Any one of the following: 1. Complying internal floating roof. 2. Complying external floating roof. 3. Complying tank with a closed vent system. 4. A system equivalent to the above.
60.112b,a	19,815-39,894 gal	4.0-11.1 psia	After 7/23/84	Same as above

Table 302.1B BAAQMD Vapor Control Equipment Requirements			
Regulation	Capacity	TVP	Equipment Required
8-5-302	Less than 19,813 gal	All gasoline	Any one of the following: 1. Pressure vacuum valves (PV) valves set to within 10% of the maximum allowable working pressure. 2. PV valves set to 0.5 psia. 3. Equipped with a complying vapor control system.
8-5-303	9,906-19,813 gal	Over 1.5 psia	Same equipment required as in 8-5-302.
8-5-304.1	19,813-39,626 gal	Over 1.5 psia	Any one of the following: 1. Complying internal floating roof. 2. Complying external floating roof. 3. Complying vapor control system with 95% by weight efficiency.
8-5-304.2	Over 39,626 gal	Over 0.5 psia	Same equipment required as in 8-5-304.1
8-5-305	All	Over 11.1 psia	A pressure tank that prevents vapor loss to the atmosphere or a complying vapor control system with 95% by weight efficiency.

Table 302.1C
SCAQMD Vapor Control Equipment Requirements

Regulation	Capacity	TVP	Equipment Required
463b, 1	Over 39,630 gal	0.5 psia or greater	A pressure tank that prevents vapor loss to the atmosphere or one of the following: A. Complying external floating roof that floats on top of the product. B. Complying internal floating roof that floats on top of the product. C. A fixed roof tank with a complying vapor control system.
463b, 1	19,813 to 39,626 gal	1.5 psia or greater	A pressure tank that prevents vapor loss to the atmosphere or one of the following: A. Complying external floating roof that floats on top of the product. B. Complying internal floating roof that floats on top of the product. C. A fixed roof tank with a complying vapor control system.
463c	Under 19,813 gal	Gasoline	A PV valve set within 10% of maximum working pressure or a complying vapor control device.

Table 302.1D
SJVUAPCD Vapor Control Equipment Requirements

Regulation	Capacity	TVP	Equipment Required
463.2. IV A, B, C	Over 19,800 gal	Over 1.5 psia but less than 11 psia	a. An internal or external floating roof tank with a pontoon type or double deck cover that rests on the product. The roof shall have a closure device between the tank shell and the roof edge, consisting of two complying seals. OR b. A fixed roof tank equipped with a complying vapor loss prevention system.
463.2 IV. D	Over 19,800 gal	Over 1.5 psia but less than 11 psia	An above ground tank storing gasoline must be equipped with a pressure relief device set to within 10% of the maximum allowable working pressure or connected to a complying vapor loss prevention system.
463.2 IV.	all	Over 11 psia	An internal or external floating roof tank shall not be used.

Table 302.1E
SLOCAPCD Vapor Control Equipment Requirements

Regulation	Capacity	TVP	Equipment Required
407A, 1	Over 40,000 gal	Over 1.5 psia	A pressure tank maintaining working pressures sufficient to prevent vapor or gas loss to the atmosphere or equipped with one of the following: a. A complying floating roof. b. A complying vapor recovery system. c. An equivalent system.
407A, 1, a	Over 40,000 gal	Over 11.0 psia	A pressure tank maintaining working pressures sufficient to prevent vapor or gas loss to the atmosphere or an equivalent system. A floating roof cannot be used.
407A, 2, b	Over 250 gal	Gasoline	A submerged fill pipe using a tight fitting nozzle that prevents excessive aspiration of air into the tank.
407A, 3	Over 1,500 gal	Gasoline	Phase I vapor recovery system and a PV valve in good working order with a minimum setting that is 90% of the maximum safe pressure.

Table 302.2
Fixed Roof Tank Requirements

District	Regulation	Limits
EPA	60.112b,a,3,i	A closed vent system must be designed to collect all VOC vapors and gases discharged from the storage vessel. No detectable emissions above 500 ppm beyond the background concentration indicated by an instrument are allowed.
EPA	60.112b,a,3,ii	The control device shall be designed and operated to reduce inlet VOC emissions by 95% or more. If a flare is used it must meet the specifications in 60.18.
BAAQMD	8-5-311	Vapor loss control systems that prevent loss to the atmosphere must have a 95% by weight efficiency.
SCAQMD	463b,1,G	Pressure-vacuum valves must be set within 10% of the maximum allowable working pressure.
SCAQMD	463b,3,A	Fixed roof tanks with vapor recovery systems must be capable of collecting vapors with a 95% by weight efficiency.
SCAQMD	463b,3,B	Gauging and sampling devices vented to the vapor recovery system must be equipped with a vapor-tight cover that is closed except during gauging or sampling. The roof of the tank must be vapor tight.
SCAQMD	463b,3,C	All piping, valves, and fittings must be vapor tight.
SJVUAPCD	463.2,IV,C,2	Any gauging or sampling devices on a tank vented to a vapor recovery system must be equipped with a gas tight cover that is closed at all times (except during gauging or sampling).
SJVUAPCD	463.2,IV,C,3	All piping, valves, and fittings must be under gas tight conditions (less than 10,000 ppm leak).

Table 302.3A EPA (NSPS) Internal Floating Roof Tank Requirements	
Regulation	Limits
60.112b,a,1	The roof must float on top of the product at all times except during initial filling and subsequent refilling and emptying. The process of refilling and emptying must be accomplished as rapidly as possible.
60.112b,a,1,ii	Each internal floating roof must be equipped with one of the following closure devices between the tank wall and internal floating roof edge: A. A foam or liquid-filled seal mounted in contact with the tank contents (liquid-mounted seal). B.Two seals, one mounted above the other. Each seal must completely cover the space between the wall of the tank and the internal floating roof. C. A mechanical shoe seal.
60.112b,a,1,iii	All openings on the internal floating roof except automatic bleeder vents (vacuum breaker vents) and rim space vents must provide a projection below the surface of the tank contents.
60.112b,a,1,iv	All openings in the internal floating roof except for leg sleeves, vacuum breaker vents, rim space vents, column wells, ladder wells, sample wells, and stub drains must be equipped with a cover or lid which is to be closed at all times except when the device is in use. The cover, seal or lid must be equipped with a gasket. Covers on each access hatch and automatic gauge float well must be bolted except when they are in use.
60.112b,a,1,viii	Each penetration of the internal floating roof for the purposes of sampling shall be a sample well. The sample well must have a slit fabric cover that covers at least 90% of the opening. Each penetration of the internal floating roof that allows for passage of a column supporting the fixed roof shall have a flexible fabric sleeve seal or gasketed sliding cover.
60.112b, a, 1, ix	Each penetration of the internal floating roof that allows for passage of a ladder shall have a gasketed sliding cover.

Table 302.3B
EPA (NSPS) External Floating Roof Tank Requirements

Regulation	Limits
60.112b,a,2,i	Each external floating roof must be equipped with a closure device between the tank wall and the roof edge. The closure device must consist of two seals, one above the other. The lower seal is the primary seal and the upper one is the secondary seal.
60.112b,a,2,ii	All openings on the external floating roof except automatic bleeder vents (vacuum breaker vents) and rim space vents must provide a projection below the surface of the tank contents. All openings in the roof except vacuum breaker vents, rim space vents, roof drains, and leg sleeves must be equipped with a gasketed cover, seal or lid that is closed at all times except when the device is in use. Vacuum breaker vents shall be closed at all times when the roof is floating except when the roof is being floated off or being landed on its legs. Rim vents are to be set to open when the roof is being floated off the roof leg supports or at the manufacturer's recommended setting. Vacuum breaker vents and rim space vents must be gasketed. Emergency roof drains must have a slotted membrane fabric cover that covers at least 90% of the area of the opening.
60.112b,a,2,iii	The roof must float on top of the product at all times except during initial filling and subsequent refilling and emptying. The process of refilling and emptying must be continuous and be accomplished as rapidly as possible.

Table 302.3C
EPA Primary and Secondary Seal Requirements and Vent Requirements for Floating Roof Tanks Built After 7/23/84

Regulation	Limits
60.112b,a,2,i,A	The primary seal must be a metallic shoe or liquid-mounted seal. The seal must completely cover the annular space between the tank wall and the roof edge (except for repairs as provided in 60.113b,b,4).
60.113b,b,4,i	(Metallic Shoe Seal Tanks) The accumulated area of gaps between the tank wall and metallic shoe or liquid-mounted primary seals must not exceed 10.0 sq. in. per ft. (212 sq. cm. per meter) of tank diameter. No gaps can exceed 1.5 in. (3.81 cm.) A. One end of the metallic shoe must extend into the stored liquid and the other must extend 24 in. (61 cm.) above the stored liquid. B. There must be no holes, tears or openings in the shoe, seal fabric, or seal envelope.
60.113b,b,4,ii	A. The secondary seal must completely cover the space between the tank roof edge and the tank wall. (Metallic Shoe Seal Tanks): B. The accumulated area of gaps between the tank wall and the secondary seal for tanks with metallic shoe or liquid mounted primary seals must not exceed 1.0 sq. in. per ft (21.2 cm. per meter) of tank diameter. No gaps can exceed 0.5 in. (1.27 cm). C. The secondary seal must not have any holes, tears, or other openings in the seal or seal fabric.
60.112b,a,1,v	1. Vacuum breaker vents must be equipped with a gasket and shall be closed at all times when the roof is floating except when the roof is being floated off or being landed on its legs.
60.112b,a,1,vi	2. Rim space vent must be equipped with a gasket and shall be set to open only when the internal floating roof is not floating or at the manufacturer's recommended setting.
60.112b,a,2,ii	Vacuum breaker legs and rim space vents must be gasketed. Each emergency roof drain is to be provided with a slotted membrane fabric cover that covers at least 90% of the area of the opening.

Table 302.4A BAAQMD Internal and External Floating Roof Tank Requirements	
Reg.	Limits
8-5-311	An external floating roof must have the following: There must be two complying seals; a primary seal and a secondary seal (8-5-321 and 322). An internal floating roof must satisfy one of the following: 1. A liquid mounted primary seal, mounted in full contact with the liquid in the space between the tank shell and floating roof. 2. A vapor mounted primary and secondary seal. 3. A liquid mounted complying primary and a secondary seal (8-5-321 and 322 under primary and secondary seal requirements).
8-5-320	All openings in the roof except pressure-vacuum valves must meet the following conditions: 1. Openings must have a projection below the surface of tank contents. 2. Openings must be closed except during use and be equipped with a seal or lid with no gap exceeding 1/8 in. Viewports and other openings, except floating roof legs, shall be equipped with a gasketed cover, seal or lid. 3. Inaccessible openings, on internal floating roof tanks, should have no visible gaps viewed from the fixed roof manway except when the opening is in use.
8-5-320	Pressure-vacuum valves set to pressure within 10% of the max. allowable working pressure or at least 0.5 psia and properly installed, maintained and in good operating order and under gas tight conditions except when pressure exceeds valve set pressure.
8-5-320	Solid sampling or gauging wells must provide the following: -Well must project below surface of tank contents -Well must be equipped with a cover, seal or lid that is closed except during use, with no gap exceeding 1/8 in. -Addition of gaps between the well and roof and tank sealing surfaces must not exceed 1/2 in.
8-5-320	Slotted sampling or gauging wells must provide the following: 1. Well must project below surface of tank contents. 2. Well must be equipped with an internal float with no gap between the float and well exceeding 1/2 in. 3. Addition of gaps between the well and roof shall be added to the gaps used to determine compliance of the secondary seal and must not exceed 1/2 in.
8-5-320	Emergency roof drains must have a slotted membrane fabric cover or equivalent that covers at least 90% of the area of the opening.

Table 302.4B
BAAQMD Primary Seal Requirements

Regulation	Limits
8-5-321 and 8-5-11	The primary seal must be liquid mounted unless the primary and secondary seal are vapor mounted.
-85321	No holes or tears in the primary or secondary seal fabric. Metallic-shoe-seals must have one end of the shoe extending into the stored liquid and the other a minimum distance of 24 in. above the stored liquid surface. The maximum gap between the shoe and the tank shell must not be greater than double the gap allowed by the seal gap criteria for a length of at least 18 in. in the vertical plane above the liquid surface in the tank.
8-5-321	(Welded tanks with metallic shoe seals): No gap between the tank shell and primary seal can exceed 1-1/2 in. No continuous gap greater than 1/8 in. can exceed 10% of the tank circumference. The cumulative length of all primary seal gaps exceeding 1/2 in. shall not be more than 10% of the circumference and the cumulative length of all primary seal gaps exceeding 1/8 in. shall not be more than 40% of the circumference.
8-5-321	(Riveted tanks with metallic shoe seals): No gap between the tank shell and primary seal can exceed 2-1/2 in. The cumulative length of all primary seal gaps exceeding 1-1/2 in. shall not be more than 10% of the circumference.
8-5-321	(Tanks with resilient-toroid-seals): No holes or tears in the primary or secondary seals. No gap between the tank shell and primary seal can exceed 1/2 in. The cumulative length of all primary seal gaps exceeding 1/8 in. shall not be more than 5% of the circumference.

Table 302.4C BAAQMD Secondary Seal and Vent Requirements	
Regulation	Limits
8-5-320 and 8-5-320.1	Secondary seals on storage tanks equipped with an external floating roof, or an internal floating roof must extend from the tank roof to the tank shell and not be connected to the primary seal.
8-5-322 and 8-5-322.1	Secondary seals on storage tanks equipped with an external floating roof, or an internal floating roof must meet the following conditions: No holes or tears which allow the emission of organic vapors. The secondary seal must allow easy insertion of probes up to 1-1/2 in. in width.
8-5-322.3	(Secondary seals on welded tanks): No gap between the tank shell and the secondary seal can exceed 1/2 in. The cumulative length of all secondary seal gaps exceeding 1/8 in. shall not be more than 5% of the tank circumference.
8-5-322.5	(Secondary seals on welded tank - zero gap criteria): Welded tanks with seals installed after 9/4/85 or welded internal floating roof tanks with seals installed after 2/1/93: No gap between the tank shell and the secondary seal can exceed 0.06 in. The cumulative length of all secondary seal gaps exceeding 0.02 in. shall not be more than 5% of the tank circumference of the tank excluding gaps less than 1.79 in. from vertical weld seams.
8-5-322.4	(Secondary seals on riveted tanks): The secondary seal must have two sealing surfaces to prevent emissions around rivets. Serrated sealing surfaces cannot exceed 6 in. and no gap between the tank shell and secondary seal can exceed 1/2 in. The cumulative length of all secondary seal gaps exceeding 1/8 in. can not be more than 5% of the circumference. The secondary seal must allow easy insertion of probes up to 1-1/2 in. in width.
8-5-320.3	Pressure-vacuum valves on floating roof tanks set to pressure within 10% of the max. allowable working pressure or at least 0.5 psia and properly installed, maintained and in good operating order and under gas tight conditions except when pressure exceeds valve set pressure.

Table 302.5A
SCAQMD Internal and External Floating Roof Tank Requirements

Regulation	Limits
463b,1,A (external floating roof)	A pontoon or double deck-type cover that rests on the surface of the contents. Except as provided in 463b,1,E, the closure device for external floating roof tanks must consist of two seals, one above the other, the primary and secondary seals.
463b,1,G	All openings in the roof except pressure-vacuum valves, which must be set within 10% of the maximum allowable working pressure, must project below the liquid surface. These openings must be equipped with a cover, seal or lid that is closed at all times except when the device is in use.
463b,1,H	Any emergency roof shall be provided with a slotted membrane fabric cover, or equivalent, that covers at least 9/10 of the area of the opening.
463b,1,I	A floating roof tank must not be used if the true vapor pressure is 11 psi or greater.
463b,2,B (internal floating roof)	New tanks or those modified after 6/1/84 must have a closure device consisting of a primary and secondary seal. All openings and fittings must be fully gasketed and/or controlled in a manner specified by the executive officer. The closure device must have an effectiveness equivalent to a welded tank with metallic shoes.
463b,2,C	An internal floating roof tank shall not be used if the true vapor pressure is greater than 11 psi.
463b,2,D (internal floating roof)	Compliance shall be determined by the lower explosive limit (LEL) with an explosimeter. The vapor space above the floating roof must not exceed 50% of the LEL for tanks installed before 6/1/84 and 30% for tanks installed after 6/1/84.
463e	No crude containing more than 70 ppm of hydrogen sulfide shall be stored in a floating roof tank.

Table 302.5B SCAQMD Primary Seal Requirements	
Regulation	Limits
463b,1,F	The primary seal must be available for unobstructed inspection annually and after installation of a secondary seal. For riveted tanks with toroid-type seals, 8 locations must be available; in other cases, 4 locations must be available. For secondary seals installed after 8/15/77 the primary seal will be inspected every 5 years.
463b,1,B,i	(Welded tanks with metallic shoe-type seals): No gaps between the tank shell and primary seal greater than 1.5 in. for an accumulative length of 10%, 0.5 in. for another 30% and 0.125 in. for the remaining 60%. No gap between the tank shell and the primary seal can exceed 1.5 in.
463b,1,B,iii	Metallic shoe seals must have one end of the shoe extending into the stored liquid and the other end must be 24 in. above the surface of the stored liquid.
463b,1,B,iv	(Welded tanks with metallic shoe-type seals): The maximum gap between the shoe and the tank shell must be less than double the gap allowed by the seal gap criteria for a length of at least 18 in. in the vertical plane above the liquid surface. There must not be any holes, tears, or openings in the secondary, primary seals or shoe.
463b,1,C,i	(Tanks with resilient-toroid type seals installed before 8/15/78): No gaps between the tank shell and the primary seal can exceed 0.125 in. for an accumulative length of 95% of the tank circumference and must not exceed 0.5 in. for an accumulative length of the remaining 5% of circumference. No gap between the primary seal and the tank shell can exceed 0.5 in.
463b, 1, C, iii	(Tanks with resilient-toroid type seals installed after 8/15/78): Gap criteria (closure device for vapor loss control) must be equivalent to a welded tank (463b, 1, B above).

Table 302.5C SCAQMD Secondary Seal and Vent Requirements	
Regulation	Limit
463b,1, B, v 463b,1, C, v	The secondary seal must allow easy insertion of probes up to 1.5 in. in width.
463b, 1, B, iv 463b, 1, C, iv 463b, 1, D, iv	There must be no holes, tears, or openings in the secondary seal envelope.
463b,1, B, vi 463b,1, C, vi 463b,1, D, vi	The secondary seal must extend to the tank shell and must not be connected to the primary seal.
463b,1, B, ii 463b,1, C, ii 463b,1, D, ii	(Welded and riveted tanks with metallic shoes and tanks with resilient toroid type seals): No gaps between the tank shell and the secondary seal can exceed 0.125 in. for an accumulative length of 95% of the tank circumference and must not exceed 0.5 in. for an accumulative length of the remaining 5% of circumference. No gap between the secondary seal and the tank shell can exceed 0.5 in.
463b,1,D,v	(Riveted tanks with metallic shoes): The secondary seal must allow easy insertion of probes up to 2.5 in. in width.
463b,1,G	Pressure-vacuum valves must be set to within 10% of the maximum allowable working pressure of the roof.

Table 302.6A
SJVUAPCD Internal and External Floating Roof Tank Requirements

Regulation	Limits
463.2,IV,A,2,a	Floating roof tank must be equipped with a pontoon or double deck type cover that rests on the surface of the liquid contents.
463.2,IV,A,2,b	The closure device between the tank shell and the roof edge must consist of two seals, one above the other. The lower one is the primary seal and the upper one is the secondary seal.
463.2,IV,A,3	Seal designs must be submitted to the control officer and shall not be installed or used unless they are approved by the control officer.
463.2,IV,A,5	All openings in the roof used for sampling or gauging, except pressure vacuum valves, must provide a projection below the surface of the liquid contents and must be equipped with a cover, seal, or lid. The cover, seal or lid must be closed and gas tight at all times.
463.2,IV,A,6	Roof drains must be provided with a slotted membrane cover that covers at least 9/10 of the area of the opening.
463.2,IV,A,1 463.2,IV,B,1	A fixed roof tank with an internal floating-type cover or an external floating roof tank shall not be used if the organic liquid stored has a true vapor pressure of 11.0 psia or more.
463.2,IV,B,2	Internal floating roof tanks must be equipped with approved closure devices (i.e. primary and secondary seals, section IV,A or IV,B,3).

Table 302.6B SJVUAPCD Primary Seal Requirements	
Regulation	Limits
463.2,IV,A,4	The primary seal envelope shall be made available for unobstructed inspection annually. In the case of riveted tanks with toroid type seals, a minimum of 8 locations shall be made available. In all other cases a minimum of 4 locations must be available.
463.2,IV,A,3,a,1	(Welded tanks with metallic shoe seals): No gap between the tank shell and the primary seal shall exceed 1.5 in. The cumulative length of all gaps between the tank shell and the primary seal greater than 0.5 in. shall not exceed 10% of the circumference of the tank. The cumulative length of all primary seal gaps greater than 0.125 in. (1/8) shall not exceed 30% of the tank circumference. No continuous gap greater than 0.125 in. shall exceed 10% of the tank circumference.
463.2,IV,A,3,a,3 463.2,IV,A,3,b,3	Metallic shoe seals must have one end of the shoe extended into the product and the other end must be 24 in. above the surface of the stored liquid.
463.2,IV,A,3,a,4 463.2,IV,A,3,b,3	(Welded tanks with metallic shoe seals): The geometry of the shoe shall be such that the maximum gap between the shoe and the tank shell is no greater than double the gap allowed by the seal gap criteria for a length of at least 18.0 in. in the vertical plane above the liquid surface.
463.2,IV,A,3,b1	(Riveted tanks with metallic shoe seals): No gap between the tank shell and the primary seal shall exceed 2.5 in. The cumulative length of all gaps between the tank shell and the primary seal greater than 1.5 in. shall not exceed 10% of the circumference of the tank. The cumulative length of all primary seal gaps greater than 0.125 in. (1/8) shall not exceed 30% of the tank circumference. No continuous gap greater than 0.125 in. shall exceed 10% of the tank circumference.
463.2,IV,A,3,a,4 463.2,IV,A,3,b,4	There shall be no holes, tears or openings in the secondary seal or in the primary seal envelope surrounding the annular vapor space enclosed by the roof edge, stored liquid surface, shoe and seal fabric.
463.2,IV,A,3,c1	No gap between the tank shell and the primary seal shall exceed 0.5 in. The cumulative length of all gaps between the tank shell and the primary seal greater than 0.125 in. shall not exceed 30% of the circumference of the tank. No continuous gap greater than 0.125 in. shall exceed 10% of the tank circumference.

Table 302.6C SJVUAPCD Secondary Seal and Vent Requirements	
Regulation	Limits
463.2,IV,A,3,a,2 463.2,IV,A,3,b,2 463.2,IV,A,3,c,2	(Welded tanks with metallic shoe seals, riveted tanks with metallic shoe seals, and tanks with resilient toroid seals): No gap between the tank shell and the secondary seal shall exceed 0.5 in. The cumulative length of all gaps between the tank shell and the secondary seal greater than 0.125 in. shall not exceed 5% of the tank circumference.
463.2,IV,A,3,a,4 463.2,IV,A,3,b,4 463.2,IV,A,3,c,3	There shall be no holes, tears, or openings in the secondary seal envelope surrounding the annular vapor space enclosed by the roof edge, stored liquid surface, shoe and seal fabric.
463.2,IV,A,3,a,5	(Welded tanks with metallic shoe seals): The secondary seal must allow easy insertion of probes up to 1.5 in. in width.
463.2,IV,A,3,a,6 463.2,IV,A,3,b,6 463.2,IV,A,3,c,5	The secondary seal must extend from the roof to tank shell and not be attached to the primary seal.
463.2,IV,A,3,b,5	(Riveted tanks with metallic shoe seals): The secondary seal must allow easy insertion of probes up to 2.5 in. in width.
463.2,IV,A,3,c,4	(Tanks with resilient toroid seals): The secondary seal must allow easy insertion of probes up to 0.5 in. in width.
463.2,IV,A,5	Pressure-vacuum valves must be set to within 10% of the maximum allowable working pressure of the roof.

Table 302.7
SLOCAPCD Internal and External Floating Roof Tank Requirements

Regulation	Limits
407A, 1, a	The roof must be a pontoon type or double deck type that floats on top of the product and is equipped with closure seals to close the space between the roof edge and tank wall.
40CFR 60 Subparts K, Ka and Kb	EPA's New Source Performance Standards will apply

302.8 INSPECTOR SAFETY AND CONFINED SPACES

The Safety and Health Departments of the United States (OSHA) and California (DOSH) have developed detailed procedures to protect workers from the inherent dangers of entering confined spaces. These dangers include poison gases, lack of oxygen, entrapment, and smothering or drowning. The roofs of floating roof tanks are potential confined spaces and must be treated accordingly. However, the confined space regulations do not address floating roofs specifically and some interpretation is necessary.

All refinery operators have been required to develop a safety plan for their own personnel who must enter potential confined spaces. Most major refiners are very safety conscious and have developed comprehensive and efficient safety procedures which meet the legal requirements and which are strictly adhered to. An air quality inspector normally must follow all of the target refinery's safety procedures while in the facility. In addition, some air districts may have safety policies with even more extensive safety requirements for the district inspector.

302.8.1 Permit and Non-permit Confined Spaces

There are two important confined space definitions in the regulations. A **non-permit confined space** is a confined space that does not contain or have the potential to contain any atmospheric hazard capable of causing death or serious physical harm. On the other hand, a **permit-required confined space** (permit space) means a confined space that has one or more of the following characteristics:

(1) Contains or has a potential to contain a hazardous atmosphere;
(2) Contains a material that has the potential for engulfing an entrant;
(3) Has an internal configuration such that an entrant could be trapped or asphyxiated by inwardly converging walls or by a floor which slopes downward and tapers to a smaller cross-section; or
(4) Contains any other recognized serious safety or health hazard.

Confined space requirements are defined in the California Code of Regulations, Title 8, Sections 5156-5159 (8 CCR 5156-5159) and in the Code of Federal Regulations, Title 29, Chapter 27, Section 1910.146 (29 CFR 1910.146). Both codes are similar and were amended recently; Title 8 CCR in December of 1993.

The floating roofs of many tanks, and possibly other areas where an inspector must enter, may be considered permit confined spaces due to the potential hazards. According to the regulations, "If the employer decides that its employees will enter permit spaces, the employer shall develop and implement a written permit space program that complies with this section" (section 5157). This means that each air pollution control agency should have a program in place. This written program should include the following:

5157(d) Permit-required confined space program requirements
(e) Permit system elements
(f) Entry permit elements
(g) Training requirements
(h) Duties of authorized entrants
(i) Duties of attendants
(j) Duties of entry supervisors
(k) Rescue and emergency services

It is not within the scope of this manual to provide guidance for the development of a confined space program or to interpret these regulations. And the term potential hazard in the regulations is wide open for

interpretation. It is anticipated that some agencies, being less familiar with the storage tanks in their jurisdiction, might consider nearly every floating roof to be a permit-required confined space and require that corresponding safety precautions be taken. The refiners themselves however, may be able to document that no potential atmospheric or engulfment hazards exist for a given tank, and may list the tank roof as a non-permit confined space with lesser safety requirements for entering.

The following is a discussion of past practices for the inspection of storage tanks. It is not expected that these procedures will change greatly with the development of permit space programs by employers. You will of course be responsible for abiding by the procedures specified in your employer's and in the refiner's programs.

302.8.2 Floating Roof Tanks

The safety requirements for floating roof tanks depend upon the type of product being stored in the tank. Most floating roofs must be treated as confined spaces and proper testing of the air environment on the roof must be performed before personnel are allowed on the floating roof. The inspection is conducted only when the roof is stationary, meaning that product is not flowing into or out of the tank. The tank operator can tell you when the roof is stationary. You may also want to see for yourself that the fill valve is closed. The inspections should always be carried out by a team of at least three inspectors and/or refinery personnel, each of whom are certified for First Aid and CPR, certified to use a self contained breathing apparatus (SCBA), and knowledgeable of pertinent safety procedures.

Tanks Containing Sweet or Refined Products

Tanks containing gasoline, diesel fuel, jet fuel and other refined petroleum products are usually not considered potential sources of H_2S or other dangerous gases. The tanks are tested for sufficient oxygen, flammable gases and vapors, and dangerous gases (H_2S) in that order. Air containing greater than 19.5% oxygen is considered to have sufficient oxygen. Air containing less than 20% of the lower explosive level (LEL) for organic vapors is considered a safe atmosphere in terms of explosive levels from organic compounds. Inspectors may then enter the space wearing an organic cartridge respirator as long as there is continuous monitoring of the oxygen content and the LEL with an intrinsically safe instrument with audible alarm.

Instruments should be properly calibrated and warmed-up before the inspection. Be careful climbing the tank with all of the inspection gear. After ascending the tank, attach the instruments to a rope and lower the instrument(s) until it nearly touches the roof and listen for the hazard alarm. The monitoring instrument should be left suspended nearly touching the roof throughout the entire inspection. If the alarm on the monitoring instrument goes off during the inspection, the inspectors should immediately exit the area and return to the tank platform. When an inspection is conducted wearing an organic cartridge respirator, the inspector must have undergone and passed a qualitative "fit test" for that respirator.

Be careful when climbing down the ladder into the tank because the angle of the ladder changes with the height of the product in the tank; the less product in the tank the steeper the angle of the ladder.

Tanks Containing Sour Liquids

In addition to the precautions taken for refined products, tanks containing crude oil or other sour products must always be treated as potential sources of hydrogen sulfide (H_2S). Hydrogen sulfide is a gas at atmospheric conditions that is heavier than air. It can accumulate in low areas such as the confined space at the top of a floating roof tank. When an inspector climbs down to the roof of a floating roof tank, the area may be free of hydrogen sulfide, but there is potential for exposure to dangerous doses of H_2S during the inspection. Therefore, monitoring for H_2S prior to entering the confined space and during the inspection is required. The safety precautions generally taken include wearing a self contained breathing apparatus, using a hydrogen sulfide monitor with an audible alarm, wearing a harness with a life line and carrying a two-way radio. Never enter a tank which actually contains dangerous levels of H_2S. The safety precautions noted here are for spaces which have potential but do not actually contain dangerous levels of H_2S.

Access onto a tank roof will be regulated by company policy. Some refineries require the use of SCBAs when entering any tank, so be prepared to comply.

302.8.3 Additional Safety Considerations

If it is your first time at a facility, ask what warning signals are used on the premises, especially near the tanks, such as bells, sirens or flashing lights and find out what the warning signals mean.

Be careful climbing stairs. Hold on to hand rails and don't try to climb too quickly. Be prepared for wind on top of tanks; it can be very strong. Do not climb tanks or conduct inspections in high winds, when it is raining or when thunderstorms are in the area. Lightning is more likely to strike the high areas of a storage tank.

Never walk on top of a cone roof (fixed-roof) tank unless refinery personnel verify that it is absolutely safe. Falling into a tank can be fatal. The tops of some fixed roof tanks may be old and rusted and unable to support the weight of a person. Some roofs are made of fiberglass and are not made to be walked on. Many fixed roof tanks have steel tops and may be safe to stand and walk on, but check with facility operators to see if they are safe. **Storage tanks can corrode from the inside. The roof of a fixed roof tank can falsely appear to be sturdy and safe.** Most facilities periodically check their storage tanks for corrosion.

When sampling oil or diesel, caution must be exercised to avoid slipping and falling. These liquids are extremely slippery. When rinsing a sample can, hold the can on the edge of the gauge tube so there is no chance of building up a static charge.

302.9 PRE-INSPECTION PROCEDURES

It is important to prepare for a storage tank inspection prior to your visit to the site. This section is a discussion of some general guidelines on what steps to follow prior to the inspection.

302.9.1 File Review

Prior to the site inspection, the inspector should review all information available in the district source files including: approved permits, equipment lists, conditions for each permit, previous inspection reports, notices of

violation, breakdown reports, enforcement actions taken, complaints, variance histories, alternative emissions control plans, abatement orders, and processes involved at the facility.

The inspector may wish to complete some portions of the inspection documentation before arriving at the facility, as this will save time during the pre-inspection meeting. If your district has checklists or rule specific forms, use them.

302.9.2 Regulation Review

You should review any references to the specific rules which are noted in the source files. In particular be familiar with each standard and exemption in the storage tank rules. Discuss the tankage regulations with experienced personnel and review any policies your district may have. Make sure that you receive consistent interpretations on how to apply the requirements of the rules.

302.9.3 Equipment Check

Make sure that you have the following equipment available for use during the inspection; vision protection, hearing protection, safety shoes, fire resistant coveralls, hard hat, gloves, identification, business cards, pens, wipes, inspection forms, chain of custody forms, hydrocarbon analyzers, hydrogen sulfide detector, self contained breathing apparatus, sampling cans, can case, labels, gapping tools, tape measure, chalk, and soap solution.

302.9.4 Pre-entry and Entry

When you arrive at a the tank farm, notice if there are any strong odors. If there are any odors make sure you document them and find out where they are from after meeting with facility personnel. Request to see the previous contact mentioned in the files. Depending on the facility, it may be the environmental coordinator, supervisor, or operator. Always present your business credentials immediately to avoid confusion.

If the source is unfamiliar with your district's authority, be prepared to cite and provide copies of California Health & Safety Code (CHSC) Section 41510: Right of Entry (a copy is available in the appendix). Know and follow your district's policy when the facility refuses entry.

302.9.5 Pre-inspection Meeting

The inspector should state the purpose of the inspection and identify the storage tanks which will be inspected. Facility information can be verified during this meeting, including: the facility name and ownership, address with city and zip code, contact name, contact title, phone number and area code. Discuss safety procedures and whether or not there have been any hydrogen sulfide, odor, or other problems in the past. Request a copy of any emission inventories, material safety data sheets (MSDS), and if necessary, discuss sampling procedures.

If you have not already reviewed the Permit to Operate, you should request to see a copy of the Permit(s) for the facility and check to see if the Permit(s) is current and valid. Also, check existing Permit conditions and ask if any other changes have been made to the operation which are not reflected in the Permit.

302.10 INSPECTION OF FIXED ROOF TANKS

The inspector is encouraged to complete some portions of the inspection documentation before arriving at the facility, as this will save time during the inspection and will familiarize one with the facility. If your district has checklists or rule-specific forms, use them.

A suggested inspection form for fixed roof tanks is included in Figure 302.12. The form has been set up with pre-inspection data in the left column and the related field acquired data in the right column. Completion of the pre-inspection portion prior to the site visit may help the on-site inspector to more quickly determine whether or not the equipment meets requirements.

Short summaries of the district and federal regulations for fixed roof tanks are included in the tables in section 302.7. Please review your district's regulations and do not assume that the tables included here are up to date or complete. These tables are included for guidance and comparison and are not intended to be an authoritative list of applicable regulations.

Check for exemptions. Record the date the tank was built or last modified and compare it to the regulatory exemption dates. This is likely to be a critical piece of information for determining if the NSPS standards apply and

what the other equipment requirements are. Note the type of liquid which is supposed to be stored in the tank, the true vapor pressure of the contents, and the tank capacity. Also note whether the tank is connected to a vapor recovery system and record any operating requirements for the system.

302.10.1 Inspecting Fixed Roof Tanks Without Vapor Recovery

Fixed roof tanks without vapor recovery will vent to atmosphere regularly. However, tanks containing heavier products, such as diesel fuel, generally do not require vapor recovery systems because they have low vapor pressures.

For tanks without vapor recovery, the contents must have a true vapor pressure (TVP) below 0.5 psia or 1.5 psia (depending on the district and on the tank capacity). The true vapor pressure of the tank contents is dependent on the temperature at which it is stored. Since many products may be hot when they are stored at a refinery, the vapor pressure limits can sometimes be exceeded. Table 302.8 shows portions of SCAQMD Rule 463 Addendum, which illustrates the temperature and vapor pressure of common tank contents.

Use the facility's records to determine the vapor pressure of the contents. If you have doubts, a tank may have to be sampled to determine the contents, vapor pressure, or temperature. If the tank contents are different than allowed in the Permit to Operate, there may be a Permit violation. If the temperature or vapor pressure of the contents are higher than allowed in the Permit, it is a violation of the regulations.

Storage tanks should be in good condition in accordance with Permit requirements. Some Permit requirements pertaining to good maintenance may include: no loose or missing rivets or bolts on the top or sides of the tank, no wet oil emanating from rivets or seams, and no holes in the tank. Make sure all Permit items are checked. Hatches on the tank should be closed unless they are in use. Old storage tanks built before (and not modified since) the start of air pollution regulations may be in very poor condition, but may still be in compliance.

Inspect the tank records. It is also necessary for facilities to keep records for their Permit tanks. Items such as the liquid stored in each tank, the temperature of the stored liquid and the Reid vapor pressure may have to be recorded. The date that a tank is filled, emptied, or cleaned should also be

Figure 302.12
Inspection Checklist for
Fixed Roof Tanks

Pre-Inspection:	Field Inspection:
Facility name:	Date/time:
Storage tank number: Permit number: Permit expiration date:	Inspector: Agency:
Facility address:	Facility contact person(s)/title(s): Telephone:
Date tank built or modified: Capacity:	Any excessive odors noted?
Tank contents: Vapor pressure limit: Temperature limit:	Tank contents: Vapor pressure: Temperature: Sample taken?
Ground level equipment	
Is tank equipped with: Sample taps? Water draw to surface drain? Tank mixer? Water sensor? Other?	Record all leaks in drops per minute or ppm. Sample taps uncapped or leaking? Water draw uncapped or leaking? Leaks? Leaks? Fill/suction line leaks? Other leaks? Loose, missing, or leaking bolts or rivets? Oil stains on the side of the tank? source?
Tank roof equipment	
Is tank equipped with: Hatch gaskets? PV valve? (setting?) Other?	 Hatches closed and gasketed? PV valve leaks (ppm)? Other gaps or holes in roof?

Figure 302.12 (continued)
Inspection Checklist for
Fixed Roof Tanks

Pre-Inspection:	Field Inspection:
Is vapor recovery system installed? Type of vapor recovery system:	Is vapor recovery system in operation? Vapor recovery system leaks: Location: Leak (ppm):
Operating pressure range: PV valve relief setting:	Acquire strip chart recordings or other records. Has PV valve set point been exceeded? Current system pressure:
Pressure relief valve leak limit (ppm):	PV valve leaks (ppm):
	Other gaseous leaks:
Other Permit conditions:	
Recordkeeping requirements:	Have accurate records of the tank contents been kept? Have accurate records of the tank vapor pressure been kept? Observe self-inspection and maintenance records for the vapor recovery system. Other:

Table 302.8
Storage TemperaturesVersus Actual Vapor Pressure

Organic Liquid	API Gravity	Boiling Point	Temperature (F) not to be Exceeded for 0.5 psia Vapor Pressure	Temperature (F) not to be Exceeded for 1.5 psia Vapor Pressure
Crude oils	12	----------	----------	----------
	13	----------	120	180
	14	----------	85	145
	16	----------	60	107
	20	----------	52	84
	22	----------	49	77
	26	----------	42	70
	30	----------	38	64
Middle Distillates				
Kerosene	42.5	350	195	250
Diesel	36.4	372	230	290
Gas oil	26.2	390	249	310
Stove oil 23	421	275	340	----------
Jet fuels				
JP-1	43.1	330	165	230
JP-3	54.7	110	----------	25
JP-4	51.5	150	20	68
JP-5	39.6	355	205	260
JP-7	44-50	360	205	260
Fuel Oil				
No.1	42.5	350	195	250
No.2	36.4	372	230	290
No.3	26.2	390	249	310
No.4	23	421	275	340
No.5	19.9	560	380	465
No.6	16.2	625	450	----------
Asphalts				
60-100 pen.	----------	----------	490	550
120-150 pen.	----------	----------	450	500
200-300 pen.	----------	----------	360	420
Benzene	27.7	176	35	70
Cyclohexane	49.7	177	35	70
Ethyl alcohol	47.0	173	45	83
Isopropyl alcohol	47.0	181	45	87
Methyl alcohol	47.0	148	----------	50
Methylethyl ketone	44.3	175	30	70
Toluene	30.0	231	73	115

found in a company's records. Since some tanks have throughput limits on their Permits to Operate, the throughput for those tanks must be recorded. It may be done monthly, weekly, or daily depending on the district regulation or Permit to Operate.

302.10.2 Inspecting Fixed Roof Tanks With Vapor Recovery

Most fixed roof tanks must have vapor control systems. Those tanks which do not need vapor recovery include small tanks and tanks containing nonvolatile liquids. Each district rule specifies the size and true vapor pressure limits which apply. Some districts may also place Permit limits on the hydrogen sulfide (H_2S) concentration in the tank contents.

Inspect the vapor recovery system for proper operation and for fugitive hydrocarbon leaks. If the tank vapor recovery system is equipped with a compressor, check to see if the compressor is working properly. The vapors from the storage tanks should be sent to the gas plant, fuel gas system or handled in another manner in accordance with Permits and regulations. Some districts require that self-inspection and maintenance records for vapor recovery systems be kept and made available for district inspection. If possible, ask to see these records and check to see that the self-inspections are being performed as required and confirm that system problems are being fixed promptly.

If a tank has a manometer for the vapor recovery system, check to see that it is operating correctly. The manometer indicates the gauge pressure (pressure relative to atmospheric pressure) inside the tanks in inches of water. Some vapor recovery systems have a chart recorder, indicating the pressure and operation of the vapor recovery system. If a system has a chart recorder, verify that the pressure has not exceeded the pressure-vacuum relief valve set point. This indicates venting through the PV valve. It is important that a tank vent when necessary to prevent damage, but this means hydrocarbons are venting into the atmosphere and/or air is getting into the tank. Tanks connected to vapor recovery systems normally should not vent to the atmosphere.

The tank vapor recovery system must be gas tight. When the tank vapor recovery system is operating properly, there should not be any venting from breather valves or pressure relief valves on the tank and there should not be any hydrocarbon emissions from any other roof components. These emissions

are normally detected using a properly calibrated hydrocarbon analyzer (OVA, TLV, etc.). Make sure that you are familiar with the calibration and operation of the analyzer. Check gauge hatches, tank seams, bolts and rivets, pressure relief valves and other accessible areas for any hydrocarbon leaks. Consult your district regulations for allowable fugitive hydrocarbon emission limits from leaking tanks and components.

Pressure-vacuum relief valves (PV valves) are common sources of emissions from storage tanks. Check PV valves on the top of the tank for leaks using an analyzer. PV valves should have a gas tight seal. Sight, sound, and smell can be used to detect leaks when an analyzer is not available or practical, but an analyzer is required to document a violating gas leak. A "heat haze" distortion is an indication of hydrocarbon leakage, as are continuous hissing sounds from hatches or breather vents.

Make sure there are no holes, cracks, or gaps in the top of the tank. Check any gaskets in the seams at the tops of the cone roof tanks; they should be in good condition and must be under gas tight or vapor tight conditions if a tank has vapor recovery.

If there are any sample taps on the tank, make sure that the valve or tap is not dripping any liquid. The tap is an open-ended line, so there should be a cap on the end or a second valve. There should not be just one valve on the end of an open-ended line.

If a tank is bolted or riveted together, make sure that there are no loose or missing rivets or bolts on the top or sides of the tank. Old tanks at refineries often have numerous rivets. The rivets in a tank can be a source of hydrocarbon emissions to the atmosphere. Look for any wet oil or stains emanating from rivets or seams. Check for water spots or discoloration around the hatch and tank side. This may be an indication of operational upsets resulting in burping and the release of vapors.

302.11 INSPECTING FLOATING ROOF TANKS

The inspector is encouraged to complete some portions of the inspection documentation before arriving at the facility, as this will save time during the inspection and will familiarize one with the facility. If your district has checklists or rule-specific forms, use them.

A suggested inspection form for floating roof tanks is included in Figure 302.13. The form has been set up with pre-inspection data in the left column and the related field acquired data in the right column. Completion of the pre-inspection portion prior to the site visit may help the on-site inspector to more quickly determine whether or not the equipment meets requirements.

Short summaries of the district and federal regulations for floating roof tanks are included in Tables 302.3 through 302.7. Please review your district's regulations and do not assume that the tables included here are up to date or complete. These tables are included for guidance and comparison and are not intended to be an authoritative list of applicable regulations.

Check for exemptions. Record the date the tank was built or last modified and compare it to the regulatory exemption dates. Note the type of liquid which is supposed to be stored in the tank, the vapor pressure of the contents, and the maximum allowable temperature. The true vapor pressure limit for most floating roof tanks is 11.0 psia. Record whether the tank is welded or riveted, the types of seals installed, and determine the gap limits for both the primary seal and the secondary seal. Also note the tank capacity, the circumference of the roof seals, and whether the tank has an internal or external floating roof.

302.11.1 External Floating Roof Tank Inspection

Upon arriving at the target tank, it is recommend that you proceed with the ground level inspection of the tank first. This will acquaint you with the surroundings and you will have a chance to become aware of any unnatural or dangerous circumstances. Warm up and test your hydrocarbon analyzer by checking the pipelines for fugitive emissions. Confirm that the proper valves are indeed closed, so that the floating roof will be stationary. Observe the ground level equipment for leaks and assure that the tank mixer (if installed) is turned off.

Determine what product is in the tank and the vapor pressure. Compare these to the Permit conditions. You may choose to take a small sample in a glass bottle for observation purposes. Does the sample look like crude oil, diesel, or finished gasoline as stated? Are there any odors, such as the characteristic rotten egg smell of hydrogen sulfide (H_2S)? Remember, you will be taking extensive safety precautions to enter the floating roof. You should know for sure what is in the tank.

Figure 302.13
Inspection Checklist for
Floating Roof Tanks

Pre-Inspection:	Field Inspection:
Facility name:	Date/time:
Storage tank number: Permit number: Permit expiration date:	Inspector: Agency:
Facility address:	Facility contact person(s)/title(s): Telephone:
Date tank built or modified: Capacity: Diameter: Height:	Any excessive odors noted?
Tank contents: Vapor pressure limit: Temperature limit:	Tank contents: Vapor pressure: Temperature: Liquid level: Sample taken?
Ground level equipment	
Is tank equipped with: Sample taps? Water draw to surface drain? Tank mixer? Water sensor? Other?	Record all leaks in drops per minute or ppm. Sample taps uncapped or leaking? Water draw uncapped or leaking? Leaks? Leaks? Fill/suction line leaks? Other leaks? Loose, missing, or leaking bolts or rivets? Oil stains on the side of the tank? source?
Roof equipment	
Gap limits for roof components:	Gauge wire: Anti-rotational device: PV valve leaks (ppm): Legs taped or covered? Vacuum breaker leg vent closed?

Figure 302.13 (Continued)
Inspection Checklist for
Floating Roof Tanks

Pre-Inspection:	Field Inspection:
Secondary Seal	
Date seal was constructed or last modified: Tank design type- Welded:___ Riveted:___ Internal floating roof:__External floating roof:__ Roof seal circumference:	Secondary seal gaps - (for internal floating roof, check visually from tank hatch) location width length Large gaps: Cummulative gaps:
Secondary seal gap limits- Maximum gap width: Cumulative gap width: Cumulative gap % limit (Allowable % of roof circumference):	Total length of cumulative gaps: % of roof circumference: Any holes or tears in secondary seal?
Date seal was constructed or last modified: Primary seal gap limits- Maximum gap width: Cumulative gap width: Cumulative gap % limit (Allowable % of roof circumference): Planned inspection type full circumference____ 4 point____ 8 point____	Primary seal gaps - (external floating roof only) location width length Large gaps: Cummulative gaps: Total length of cumulative gaps: % of roof circumference: Any holes or tears in primary seal fabric?
Other Permit and/or rule requirements: (maximum throughput for example)	
Recordkeeping requirements:	Have accurate records for the following been kept? The liquids stored in the tank(s)? The vapor pressure? The last date the seals were inspected? The gap measurements from the last inspection? Other:

Record the temperature of the tank (if available) and feel the tank wall to see if the temperature gauge reading is reasonable. Hot tanks can generate more vapors and high temperatures may indicate that there is a problem at the process unit which pumps to the tank. Investigate any abnormal situations to be sure that it is safe to enter the tank roof.

Look for signs of oil at the roof drain valve outlet which might indicate a leaking roof drain. Check that sample taps are properly capped or plugged and are not dripping.

Entering the Roof

If the external floating roof is more than five feet from the top of the tank wall, the space on top of the roof is considered to be a confined space and the appropriate procedures must be followed, as discussed in Inspector Safety and Confined Spaces.

Before entering a confined space without a self-contained breathing apparatus (SCBA), the space must be tested for hydrogen sulfide, lack of oxygen, carbon monoxide, lower explosive limit (L.E.L.) or any other conditions that could be hazardous. In addition, the potential for these conditions should not exist, which typically includes that the tank should be properly secured with transfer valves closed. If the confined space is found to have no hazards, inspectors may enter it without a breathing apparatus (although rules at refineries may vary). If any potential life threatening hazards are detected, you must then decide whether it is safe to enter the tank roof with a self contained breathing apparatus. If the answer is yes, the inspection can proceed while wearing and using the air pack.

It is necessary to have at least two people during an inspection when an inspector must enter a confined space. One person, equipped with an emergency radio, must stand by at the platform of the tank or entrance of the confined space so that he can get help if the inspector in the confined space gets injured or trapped. Some facilities and agencies may require a third person at ground level and in contact with the person on the platform. In some cases, a lifeline (rope) must be connected to the inspector on the roof in case of an emergency. Safety regulations between refineries and agencies may differ. In general, the most stringent safety requirements which apply are followed.

Caution must be used when climbing down to the roof. Many tanks have a ladder for access to the roof. When it is nearly full the ladder will be almost horizontal and when it is nearly empty the ladder will be nearly vertical. Access to the tank roof can be difficult when the ladder is vertical, especially when an inspector is carrying a lot of equipment and/or wearing an SCBA. Climbing down a ladder that is nearly horizontal requires caution and the use of a different climbing technique.

Once an inspector is on top of the external floating roof, the seals can be inspected. Check the tank shell for product adhering to the wall or rising up by capillary action. The seals could be failing or other problems may exist if product is on the walls.

Checking Secondary and Primary Seals

The secondary seal is typically inspected first for gaps, holes and tears. There is some potential for damage to the secondary seal by the inspector as the seal is pulled back in order to see the primary seal. The seal may not immediately pop back into place and make a tight seal. To be fair, inspect the secondary seal first, recording where gaps (if any) are located. Then pull the secondary back as necessary and inspect the primary seal. When this is complete, take one last quick look at the secondary seal and report any new gaps to the company representative for repair. A conscientious inspector should not be held responsible for this type of damage which may occur while performing his duties.

There are two ways that the tank seal gaps must be checked to satisfy regulations. First, the rules allow a **maximum gap** that cannot be exceeded at any point on the circumference of the seal. Second, the gaps must be checked for the **cumulative gap** length, or the sum of the lengths of all the gaps in the seal. For example, a rule for secondary seals might say: 1) No gaps over 1/2 inch are allowed and 2) The cumulative length of all gaps over 1/8 inch shall not exceed 10% of the circumference of the tank.

The maximum gap in the example is 1/2 inch and any gap over 1/2 inch is a violation. To continue the example, assume that a tank with a circumference of 200 feet is being inspected. Two gaps exceeding 1/8 inch are found; the first gap is 10 feet long and the second gap is 6 feet long. The cumulative

gap length is 16 feet which is equal to 8% of the tank circumference. In this example, the tank's secondary seal is in compliance. Similar calculations are used for primary seals except that wider gaps are typically allowed.

Federal NSPS (New Source Performance Standards) regulations use the total area of all the gaps as a criteria. Generally, the California district regulations are more strict than the NSPS regulations and gap areas are not often calculated here.

Gapping Tools

Gapping tools are used to check the gaps between the tank seals and the tank shell walls. They are metal rods or sticks machined to the proper dimensions. The gapping tool for the secondary seal may be only about six inches long and the width and thickness of the tool can be used to measure gaps. One gapping tool, for example, may have a width of 1/2 inch (for measuring the maximum gap allowed on the secondary seal of most tanks) and a thickness of 1/8 inch (for measuring the cumulative gaps). The gapping tool used to measure the gap on primary seals is usually three to four feet long. It is also designed so that the thickness and width can both be used to take different measurements. Separate gapping tools may be used for welded tanks and riveted tanks since the allowable gaps for riveted tanks are larger.

Secondary Seal Inspection

Starting with the maximum gap dimension of the gapping tool, check the clearance between the secondary seal and the tank wall. If the gapping tool can easily fit into any gaps between the seal and the tank shell, the maximum gap allowed by regulations is exceeded and it is a violation.

Next check the secondary seals using the cumulative gap dimension of the gapping tool. If a gap is wider than the thickness of the tool, mark the tank wall with chalk where the cumulative gap begins and again where it ends. Connect these two marks with a line to show the location and length of the gap. Continue around the tank marking gaps. Measure the lengths of the gaps using a tape measure or rolling gauge. Add the gap lengths up and compare the total gap length with the tank circumference by calculating the percentage (100 x total gap length / circumference). Compare the percentage with the limit specified in the rule.

Primary Seal Inspection

In order to check the primary seal gap, the secondary seal must be pulled back to expose it. A few refineries have devices that can be used to roll around the circumference of the tank, pulling back the secondary seal, allowing for continuous inspection of the primary seal. Other facilities may supply laborers with pry bars. Inspectors should allow refinery personnel to pull back the seal for them whenever possible since there is some potential to damage the secondary seal. Pulling back and holding the secondary seal can be very strenuous; it is extremely difficult to check the primary seal by yourself. A second person should help you. Be aware that metal parts on the seal can have sharp edges and can cut you.

For metallic-shoe-seals, the gap is measured between the shoe and the tank shell. For resilient-toroid-seals, the gap is measured between the foam log and the tank shell. With the primary seal adequately exposed for inspection, measure the gaps using the proper primary seal gapping tool. As with the secondary seal, there are two gap measurements that are required: the maximum gap and the cumulative gap. The primary seal gaps are checked similarly to the secondary seals using the gapping tools, chalk, and tape measure. Carefully look at the condition of the primary seal fabric as you measure the gaps. Holes or tears in the seal fabric can also be violations. Most districts have a policy or rule indicating how big a hole or tear in the fabric is allowed.

Due to the difficulty of inspecting the primary seal, the entire circumference of the seal is not always checked. Most inspectors gap the secondary seal four to eight times around the circumference. This may vary depending on the condition of the primary seal, the condition of the secondary seal and the time available. Some districts require that the secondary seal be removed every five years or so in order to do a complete inspection of the primary seal.

Closure Criteria of Roof Components

There are several devices on the tank roof that are also required to meet minimum gap requirements. Equipment such as the anti-rotational device, the gauge wire, and any other device going through the tank roof may have gaps

which must be sealed. Measure the gaps between the seals and the devices with a gapping tool, small scale, or ruler. If the gaps are greater than the maximum dimension allowed by the rule or Permit, it is a violation.

Checking Tank Legs

The legs on the external floating roof can be a source of emissions. Vapors can emanate through the pin holes in the legs or at the base. Refineries are required to have them taped or covered. If the legs are covered, make sure that each leg has a cover and that the covers do not have any holes or tears. If the legs are taped, make sure that the tape completely covers the pin holes and the base.

Inspection of Breather Valves and Vents

Some floating roof tanks have breather valves or vents to prevent the pressure in the tank from getting too high or too low, especially when the product gets so low that the roof lands on its legs. The valves should be closed and vapor tight; use a TLV or OVA to check for gaseous leaks. Check the vacuum breaker leg to make sure it is closed and meets closure criteria like the other legs.

Inspection of Drains, Inlets, and Outlets

The roof drain leads to a hinged or flexible hose that goes though the product and to a valve on the outside of the tank at the bottom. If there are any holes in the hose, product will enter the hose and probably produce VOC emissions. The drain hose should then be replaced the next time the tank is taken out of service. Check the drain on the roof with an analyzer. Note if there is any water near the drain with oil in it by looking for a sheen (a "rainbow" of colors) in the puddle.

302.11.2 Internal Floating Roof Tank Inspection

Before you climb on top of the tank for the inspection, verify the tank contents with the company representative. Note the temperature, especially if the temperature of the tank is regulated by a Permit condition. If there is a temperature gauge on the tank, it should be on the side and near the ground. Record the height of the tank contents from the level gauge on the side of the tank. Check for fugitive emissions from the suction and fill pipelines and

from any ground level connections such as the tank mixer, sample taps, etc. Sample taps and the water draw should be plugged or capped. Note any odors in the area, especially odors of hydrogen sulfide.

Once you are on top of the tank, again stop to notice any odors. Check for leaking hydrocarbons from the hatch with an analyzer. Open the hatch or inspection port carefully, there may be noxious gases under a slight pressure in the tank. Check for a rubber seal on the hatch entrance. A seal may not be required by all districts, but the hatch should meet the district's vapor tight or closure limits. When you open the hatch it is common to smell a petroleum odor, but if the odor is very strong, there may be a problem with the tank.

The inspection must be conducted by looking through the hatch; it is not safe to go inside an internal floating roof tank. Also, the internal floating roof of some tanks is not designed to support the weight of a person. It works best to use a mirror to reflect the sun's light and illuminate the inside of the tank. Flashlights are not as bright as a mirror, but if it is cloudy, a large flashlight can be used to see the seals in the tank. Look at the secondary seal around the circumference of the floating roof and see if there are any gaps between the secondary seal and the tank wall. If there are any gaps greater than the gap allowed by the Permit to Operate or district regulations, it may be a violation. There should not be any tears in the seal. The primary seal typically cannot be inspected for safety reasons.

Note any oil on top of the floating roof. Product on top of the roof is an indication of roof problems and possible violations. Take a good look at the sides of the tank shell inside the tank and see if any product is sticking to them. The seals should be tight enough to prevent product from adhering to the tank walls.

The sampling well on most internal floating roof tanks goes from the fixed roof of the tank through the floating roof and down to the bottom of the tank. Check the seal between the floating roof and the sample well. The gap between the sample well and the floating roof should meet the district's closure criteria or gap limits. Depending on the design of the tank there may be other areas on the internal roof that may have to be checked. Some tanks have anti-rotational devices which may be pipes that go through the floating roof. The seals and openings here and in any other area must meet the

closure criteria. If the internal roof has legs, they should be covered or at least have their upper and lower pin holes taped. If the legs are covered there should be no holes in the covers.

302.12 FLOATING ROOF TANK PROBLEMS AND FAILURES

Floating roof tanks are a good method of storing petroleum products, but some problems can occur. When a tank is being filled, the secondary seal can catch the sides of the tank, causing the secondary seal to bend downward. The bend in the seal may disrupt the sealing surface and could cause a gap violation.

The roof of a floating roof tank can occasionally get stuck on one side, pulling one side of the roof off the surface of the tank contents and possibly interrupting sealing surfaces or spilling product on to the roof.

It is possible for the tank gauge wire on a floating roof tank to get hung up or to break, giving an incorrect reading for the level of the contents. Although some floating roof tanks have alarms to prevent overfilling or emptying below heel, stuff happens. A floating roof tank can get so full that the seals will slide off the top of the roof and eventually product will leak over the rim, but this rarely occurs. If a floating roof is emptied beyond where the legs touch, the tank will act like a fixed roof tank, venting to atmosphere.

The shell walls of a tank are not always perfectly round and/or vertical; therefore, the seal gaps of a tank roof could be in compliance at one level and out of compliance at another. If, for example, the tank shell is out of round near the top, the seal gaps may be out compliance when the tank is full. But with the tank drawn down, the gap distances may come into compliance near the bottom. If the gaps on a tank are checked and are not in compliance, and the same gaps are checked again and found to be in compliance without any corrective action performed by the refinery, an inspector should note the level of the roof. Changing the amount of product in a tank is not a satisfactory method of compliance.

Earthquakes can deform storage tanks and make them get out of round. This can ruin the fit between the wall and the roof of a floating roof tank. The roof can also get jammed and fail to float. An earthquake may even collapse a tank.

If the pontoon on a tank leaks, the roof will get heavier. If a pontoon leaks unnoticed for a long period of time or if the leak is severe, the roof may sink into the product. An accumulation of rainwater can also cause a roof to sink.

Breakdowns such as these must be reported promptly and repaired promptly. Failure to report or to repair these problems may be cause for a Notice of Violation.

302.13 TANK SAMPLING

Sampling may be necessary in order to determine compliance with rules or Permit requirements. Samples are usually taken to find the Reid vapor pressure (RVP), verify the tank contents, or verify other requirements. Samples may be taken from the hatch on the top of the storage tank or from sample taps on the side of the tank.

The procedures for the manual sampling of petroleum and petroleum products are found in ASTM standard D-4057-81 and in the California Air Resources Board sampling methods, California Code of Regulations (CCR), Title 13, Section 2296 (see appendix). ASTM method D-4057-81 is incorporated as a part of CCR Section 2296. These methods must be followed precisely in order to collect a legally defensible sample.

Tanks are sampled by using thief sampling, bottle sampling or tap sampling methods. Pipelines are sampled by continuous line sampling. A thief is a cylindrical device used to collect samples by lowering it on a chain or rope into a tank to the desired sample level and actuating a trip, sealing a sample of petroleum in the thief. The thief can then be pulled out of the tank with the sample.

Different designs of thieves have been developed. Some may not have a trip and simply have a small hole in the sample cap of the sample container to allow a sample to be collected. Thieves for running samples may be of this type.

In order to take a bottle sample, a bottle sampler is lowered into a tank on a chain to the desired level. A line connected to a cork on the device is pulled, allowing the bottle to fill with product. The bottle with the sample is

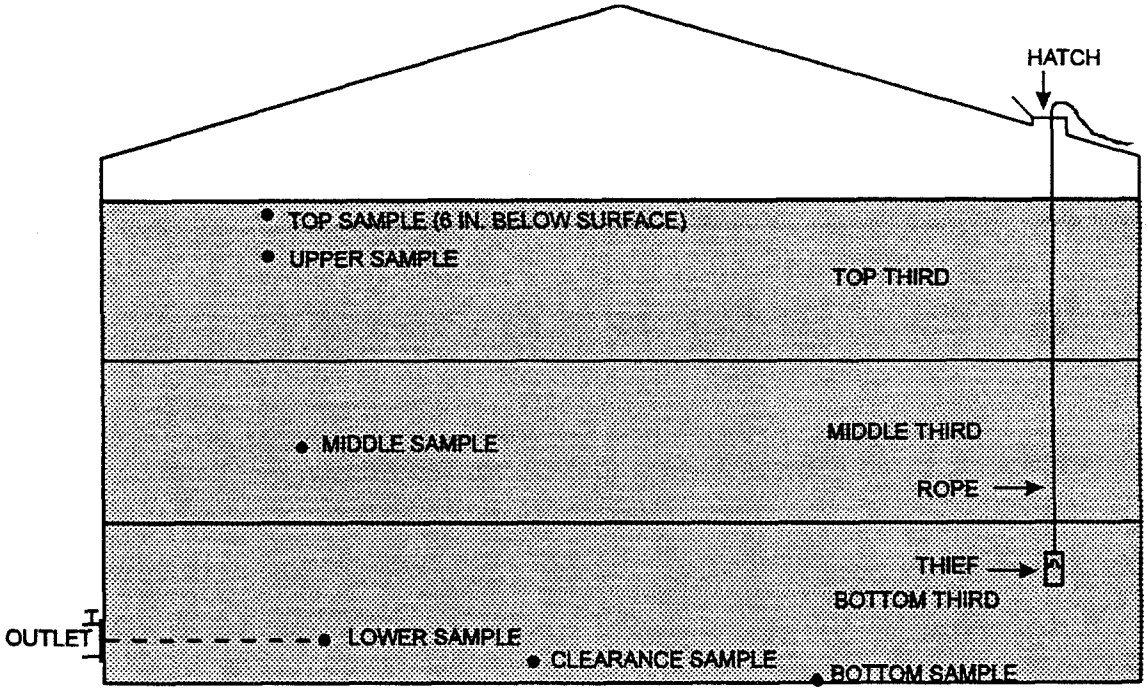

Figure 302.14
Tank Sample Locations

pulled out of the tank and a small amount of oil on the top of the bottle is poured off in order to get a representative sample.

There are many different types of tank samples that can be acquired from a tank using a sampler (Figure 302.14). Below is a list of most of the different samples that can be taken from a storage tank.[3] Most inspectors take running samples since they usually sample for Vapor Pressure.

Bottom sample - A sample from the material on the bottom surface of a tank.

Clearance sample - A sample acquired four inches below a tank outlet.

Drain sample - A sample obtained from the draw-off or discharge valve.

Lower sample - A spot sample that is taken from the level of a fixed tank outlet or swing-line outlet.

Middle sample - A spot sample acquired from the middle of the tank contents.

Running sample - A sample obtained by lowering a beaker to the level of the suction line and pulling it up through the oil at a uniform rate so that the beaker is about three-fourths full.

Spot sample - A sample taken from a specific location in a tank using a thief, bottle or beaker.

Top sample - A spot sample obtained six inches below the top surface of the oil.

Upper sample - A spot sample taken at the midpoint of the upper third of the tank contents.

Spot samples can also be taken from sample taps located on the side of the tank near ground level. By opening the cock that leads to the desired level, a sample can be collected. The sample line should be purged before collecting samples.

It is important that all samples are collected and preserved in accordance with defensible procedures. Make sure you follow the sampling guidelines and chain of custody procedures in your district. Legal issues can invalidate a sample if the proper test method or chain of custody policies are not followed. These policies are explained in the sampling method, CCR section 2296. Make sure that all collection instruments, devices, and containers are properly maintained and/or calibrated.

Sample handling procedures should verify that samples have not been contaminated or altered. As few people as possible should handle samples. The names of all people handling samples and the date and time they handle them must be recorded. A continuous custody and control record must be kept in writing from sample collection to presentation. It is usually best to

allow the facility operators to take samples for you but always observe the operator filling your sampling container and be sure that the sample is taken properly. Do not let the filled container leave your sight or control.

Immediately after a sample is taken a sample identification tag must be completed and attached to the sample container. The date, time, sample type, required analysis, maximum time allowable between sample collection and analysis, sample location, project name, address, inspector name, and any preservatives in the sample may have to be included on the tag. Make sure that samples are packed properly. RVP samples must be tightly capped immediately and kept chilled in a cooler.

After you take the samples you will need to obtain laboratory test results that provide the information you need to determine compliance. When you submit the samples, make it very clear to the lab what tests are needed and what units are required. Submit your samples in a timely manner and follow up on the paper work and results. If your district has a lab, use it. If you use an outside lab, develop procedures to ensure an accurate, complete and timely analysis.

302.14 POST-INSPECTION PROCEDURES

Prior to leaving the tank farm, the inspector should evaluate the compliance status of the tanks and should have obtained all the information necessary to complete the inspection form. Make sure you have acquired all the necessary documents to determine compliance with the rules and Permits to Operate.

The facility should be informed of the results of the inspection, advised of areas of concern where additional information or investigation is needed, or given a Notice of Violation (NOV) as soon as possible. Be prepared to make your compliance determinations, calculate excess emissions, and issue all necessary violation notices. Be able to document future NOVs which may be pending due to sample results or additional information requests. **All violations should be followed up**, consistent with your district policy, to ensure that the source is brought into compliance.

302.15 STORAGE TANK DEGASSING AND CLEANING

Periodically a storage tank must be emptied and cleaned out for inspection and maintenance. These tank turnarounds may be required by equipment failure, corrosion, buildup of solids, or scheduled inspection requirements. These tank cleanout operations can be significant sources of vapors and odors. In many cases, the cleanout operation is governed by a Permit which dictates how vapors and odors are to be controlled. Some districts have specific rules which address these operations.

302.15.1 Fixed Roof Tank Cleaning

The first step in tank cleaning is to drain as much liquid as possible from the tank using the suction line. Some fresh water is often added to the tank to float the remaining oils which are again drained from the tank. After the contents are removed, vapors and some of the contents still remain in the tank. The large vapor space in the tank can be a very dangerous explosive hazard. The vapors in the tank must be removed before workmen can clean it.

The most common methods used to remove vapors from a fixed roof tank include degassing and liquid balancing. When a tank is degassed, a gas such as nitrogen is pumped into the tank. The gas "sweeps" or "pressures out" the vapors in the tank, reducing the explosive hazard, making it safer for workers to enter the tank. Liquid balancing is a process where a liquid of low volatility, such as water, is pumped into the tank displacing the vapors in the tank.

The vapors can also be handled several ways. Vapors may be burned by a flare, sent to the vapor recovery system, sent to an activated carbon system, sent to a scrubber, or sent to a heater and burned. The vapor can also be refrigerated, condensed and recovered. A scrubber may use diesel to absorb the hydrocarbon vapors.

When as many of the vapors as possible have been removed, the tank is opened to the atmosphere and purged with fresh air. When it is safe, workers can enter the tank to clean out any sludges and solids. Stirring up these sludges may cause more odors and vapors. A common method to

reduce odors from H_2S is to spray the sludge with hydrogen peroxide or other chemicals. Vacuum trucks are also often used in these cleanup operations. The exhaust from the vacuum system can be a significant source of odors and vapors and is often treated with activated carbon or other means.

302.15.2 Floating Roof Tank Cleaning

Cleaning floating roof tanks is similar to cleaning fixed roof tanks. The main difference between cleaning the two tanks is that the vapor space for floating roof tanks is much smaller.

To take a floating roof tank containing gasoline out of service, a typical process would be as follows. The tank level might first be brought to heel, then water could be added to float the remaining gasoline into the suction line. Diesel could then be added to raise the roof level to the maintenance position (about seven feet high or so) and the legs would be unwrapped, lowered and pinned into position. The diesel serves to absorb any remaining gasoline and vapors. The water and diesel are then drained and the tank is purged as with fixed roof tanks.

302.15.3 Storage Tank Degassing Rules

The Bay Area Air Quality Management District and the South Coast Air Quality Management District were the only districts that had a rule specifically for storage tank cleaning at the time this manual was printed. Some other districts have process turnaround rules and process vessel depressurization rules, and parts of these rules may be applicable to storage tank cleaning. The following is a summary of the district rules for tank cleaning.

BAAQMD Rule 8-5-328
Tank Cleaning Requirements

Emissions of organic compounds from degassing a tank must be controlled by using one of the following:

1. Liquid balancing. The resulting true vapor pressure must be less than 0.5 psia before the tank is opened to the atmosphere.

2. An approved emission control system that collects and processes all organic vapors and gases and has an abatement efficiency of at least 90% by weight. This system must be operated until the concentration of organic compounds in the tank is less than 10,000 ppm expressed as methane.

SCAQMD Rule 1149

The major requirements of the rule 1149 include:

1. No degassing of tanks over 40,000 gallons with a vapor pressure over 2.6 psia and no degassing of tanks between 20,000 and 40,000 gallons with a vapor pressure over 3.9 psi are allowed unless:
   - liquid balancing results in a complying vapor pressure,
   - negative pressure displacement and incineration are conducted in an acceptable manner,
   - a refrigeration condenser reduces the vapor temperature to (minus 100 °F) and can handle displaced vapors, or
   - any other method that is 90% efficient in reducing VOC emissions is used.
2. Regenerating spent carbon from a carbon adsorber must have a Permit.
3. Displaced gas must be vented to a refrigeration unit or other complying device for a length of time determined by $T=2.3V/Q$, T=time (hr), V=volume of gas (ft^3), Q=volume flow rate (ft^3/hr).
4. For liquid displacement - Displaced gas must be vented to control equipment until 90% of the vapor volume in the tank is displaced by an equal volume of liquid in the control equipment.
5. Refinery must notify district at least two weeks before emptying and degassing operations.
6. When refrigeration units are used, the equipment must be monitored and any interruption by the equipment should be noted.
7. When carbon adsorption is used, an approved monitor must be installed by the vent to determine hydrocarbons released to the atmosphere.
8. Condensed liquid must be disposed of properly.

302.15.4 Verification of Compliance with Degassing Rules

Some of the degassing requirements can be verified by looking at the facility's records. Check to see that the district was notified of degassing as required in the regulations. Make sure that vapor pressures were low enough before

the tank was vented to the atmosphere. Check that vapor concentrations were recorded before the tank was vented. An on-site inspection with a hydrocarbon analyzer is of course the best method to assure compliance with the rules.

303 WASTEWATER TREATMENT

303.1 INTRODUCTION

Process wastewater is a potentially large source of emissions and odors from a refinery. As steam and water are used throughout the plant, pollutants such as oils, phenols, sulfides, ammonia, and dissolved and suspended solids are accumulated. This oily wastewater can give off significant amounts of hydrocarbons to the atmosphere if the water is not handled and contained properly. The wastewater can also produce quite offensive odors and hydrogen sulfide, both before treatment and during the various treatment processes.

To reduce the release of hydrocarbons from the wastewater system, the EPA and air pollution control districts have placed strict requirements on the facilities. Drains, sewers, and junction boxes for the process water sewer system must be sealed. Also the early stages of the wastewater treatment system must be covered. These include the gravity separators, dissolved air flotation separators, and recovered oil sumps. Some California air districts also have additional regulations affecting wastewater treatment.

In this section we will provide a description of the wastewater treatment processes, discuss the air pollution regulations which apply, and discuss how to inspect the facilities to assure compliance with the regulations.

303.2 WASTEWATER SOURCES

One of the main sources of oily wastewater is the crude desalting operation (Fig 303.1). Crude oils usually contain dissolved salts which must be removed before distillation to prevent corrosion and plugging of equipment. These salts are not necessarily table salt (NaCl), but include many different compounds with metallic elements such as manganese (Mn).

Clean or recycled water is mixed with the crude and after heating, the oil and water are allowed to separate in a large vessel known as the **desalter**. The water (brine) is drained off to the process water sewer, carrying the salts with it. The formation of oil/water emulsions can result in significant amounts of oil going to the wastewater drain.

Water (either clean or in an acid or basic solution) is used in several other refinery processes to wash the impurities from oil streams. Condensate from steam stripping operations is another oily wastewater source. The long list of

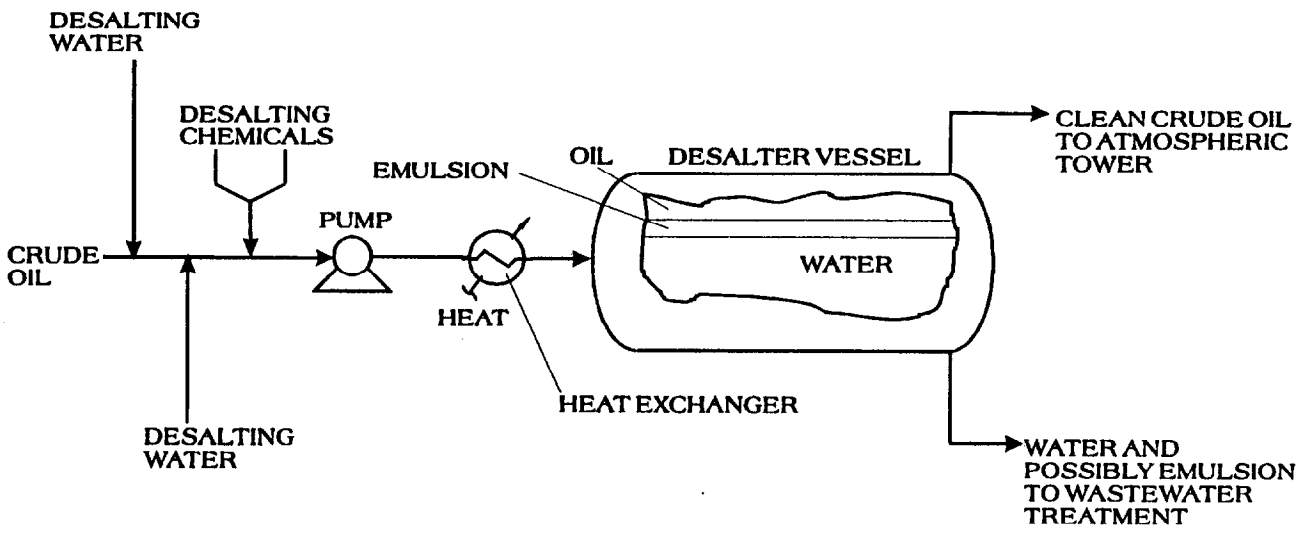

Figure 303.1
Crude Desalter

sources of oily wastewater would also include the washout of vessels and other equipment, waterdraws from petroleum storage tanks, drains for sample taps, oil leaks, and spills and general unit washdowns.

303.3 PROCESS DESCRIPTION

Process drain lines from a variety of sources from around the refinery channel the wastewater to a junction box near the wastewater treatment unit. The combined flows then may run through a rotating screen which removes debris such as plastic, gloves, rocks, etc. that could plug up pumps or pipes.

The first treatment encountered is normally a gravity separator. API (American Petroleum Institute) separators are the most common type, but several corrugated plate interceptors (CPIs) have now been installed. These facilities will be discussed later in more detail, but their main function is to allow oils to float to the top and be skimmed off, and to allow solids to sink to the bottom and be pumped out.

The water then will enter a dissolved air flotation (D.A.F.) or dissolved nitrogen flotation (D.N.F.) vessel. Bubbles and polymers are used to bring oil and particles to the surface as a scum. These are then skimmed off to tankage. Current air pollution regulations require that the water and waste streams be covered up before and through this process.

The water stream may then enter one or more biological treatments where microorganisms are used to devour and destroy dissolved oils. These are of some interest to the air quality inspector due to the odors they can generate during upsets. The final facility encountered may be a large holding pond and/or activated charcoal filters. Figure 303.2 shows the main components and flow of a wastewater treatment system.

303.3.1 Process Drains and Process Sewers

Process drains perform a simple function in a refinery, but they are important potential emission sources and they are regulated by districts. Process drains provide disposal of oily wastewater from unit processes and wash downs.

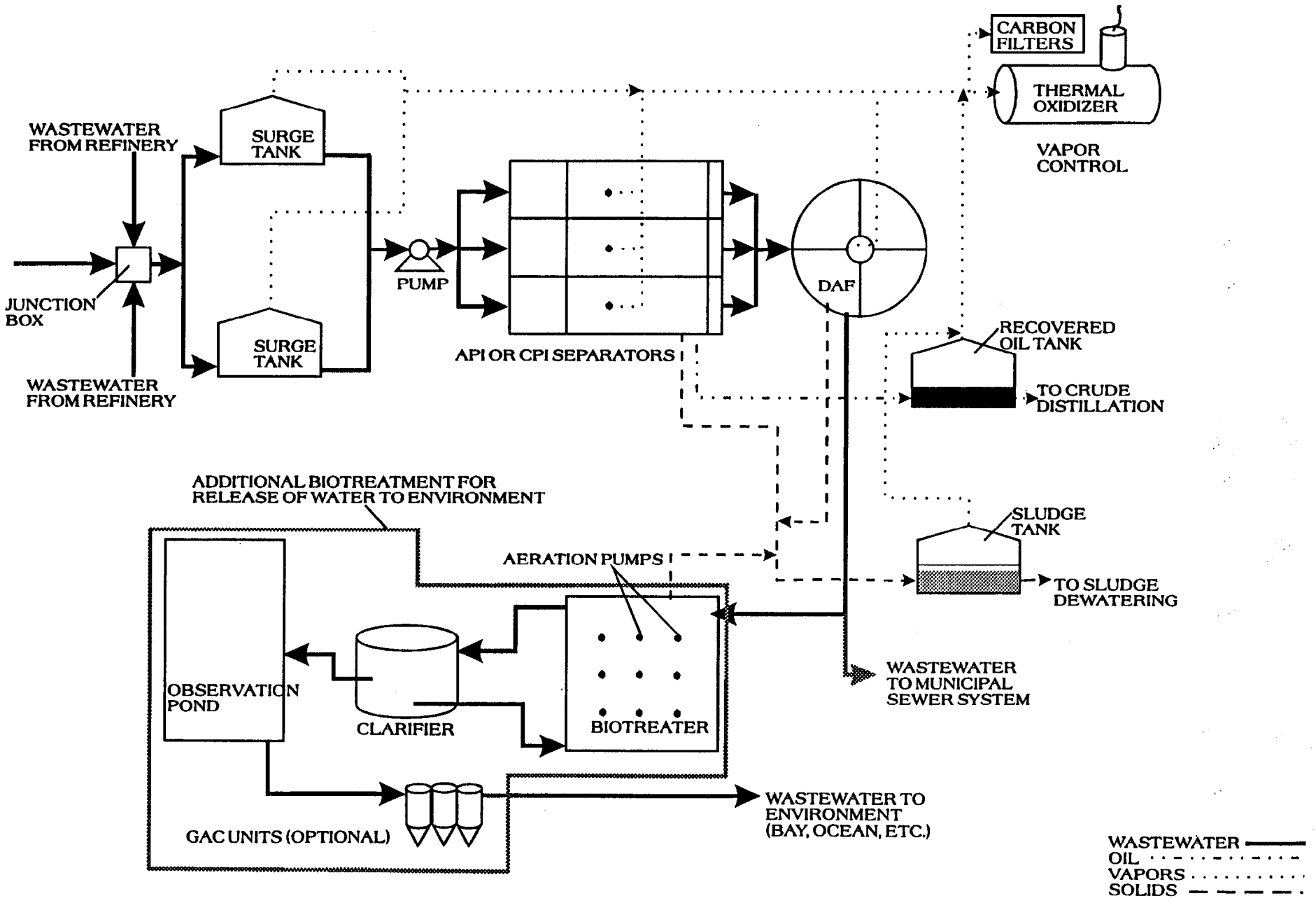

Figure 303.2
Main Wastewater Treatment Flows

Larger drains, such as those at the desalter, may be totally enclosed. On the other hand, many smaller water purges and drain lines may simply empty into a short open pipe which comes up a few inches above the ground and empties into the process sewer. The water flows from these purge and drain lines are often purposely visible so that the operator can visually monitor the flow, take samples, and assure that the flows to the process drain are indeed water and not oil. The process sewer is a channel or pipe where oily wastewater flows to the wastewater treatment system. Process sewers should be covered.

Water is also used to wash down the vessels, piping and floors for removal of oil and grime. This wash water (and rainwater) usually flows to a low-point process drain covered by a grating. Grating covered trenches are also often used to channel the wash waters and rainwater to the process drain. The washwater then simply flows into the wastewater system.

Process drains must have "P-traps" or "water seals". A P-trap on a process drain is similar to the P-trap under a sink where an "S" shaped piece of pipe is located. The water in the trap prevents emissions from coming out of the drain. There are many process drains located throughout a refinery.

303.3.2 Junction Boxes

In a refinery there are many areas where wastewater flows originate. These wastewater flows come together in junction boxes. Junction boxes are usually concrete boxes in the ground with metal lids. Junction boxes help eliminate water hammer in the wastewater flow. There are several junction boxes in most refineries.

303.3.3 API and CPI Separators

API (American Petroleum Institute, refers to API gravity) separators are one of the most widely used gravity separation devices (Fig. 303.3). They are long, rectangular, subdivided tanks with a continuous flow of wastewater. Many different designs exist but in most designs, scrapers move along the top of the water collecting oil to the downstream end of the separator. Scrapers also move upstream along the bottom of the separator collecting solids that settle to the bottom. Some units are equipped with raking devices to remove leaves and other material that may be floating in the wastewater. The rake will periodically go down into the unit and dump the debris it captures outside the machine.

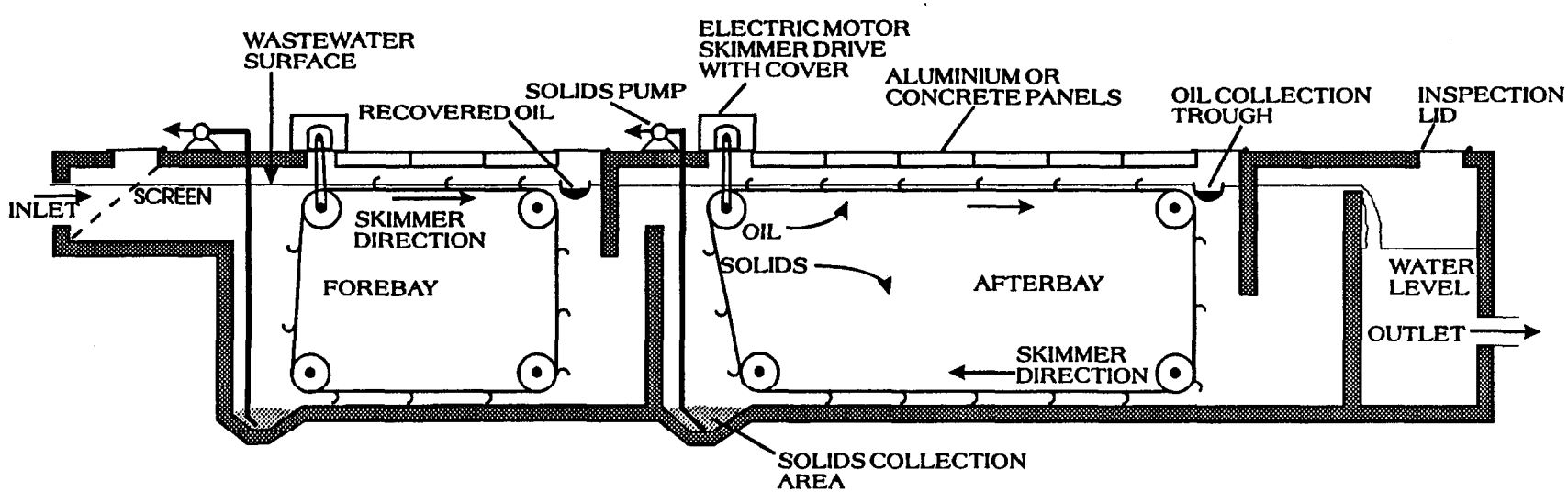

Figure 303.3 API Separator

Gravity separation employs the difference in density between oil, water, and solids to separate oil and grit from water in separators. Oil is lighter than water and floats on top of it, but heavy solids will sink to the bottom of a gravity separator. The devices can remove 60 to 99 percent of oil in wastewater depending on the difference in density between the oil and water, the temperature, and the size of the oil globules.[1] Settling chambers may be used to remove solids before skimmers or weirs are used to remove oil floating on the surface of the water.

Oil that is separated from wastewater in the API or CPI is called **"recovered oil"** or **"slop oil."** Recovered oil often drains to a sump and is then pumped to recovered oil tankage.

API separators are usually built into the ground and the tops of units are often covered with metal plates. In the past, the access doors were often left open so workers could see the skimmers and keep them adjusted properly, but now they must be kept covered to reduce hydrocarbon emissions.

The **forebay** is a part of a separator that is often mentioned in district regulations. The forebay is the vessel at the entry point of the separator (Fig. 303.3). When a separator is inspected, the forebay usually cannot be distinguished very easily from the rest of the unit. The forebay helps keep a constant flow of wastewater through the separator. When it rains, and too much water flows into a separator, excess water flows out of the forebay and into a basin or a tank. In some API separator designs, forebays do not have any skimming equipment.

Another separator that performs the skimming of oil and separation of solids is the parallel plate separator or **corrugated plate interceptor (CPI)** (Fig. 303.4).[1] In this separator, water is forced through parallel plates where oil globules collect. The larger oil globules float to the surface where they are collected by a skimmer. Some CPI separator designs are above-ground, vertical tanks, and the plates may be in packs made of stainless steel or polypropylene. Different designs exist, but the machines operate generally by the same principle. CPI separators are reported to work better for wastewaters with lower concentrations of oil than API separators.[1] CPIs are often pressure vessels which can be gas blanketed and vented to a vapor recovery system.

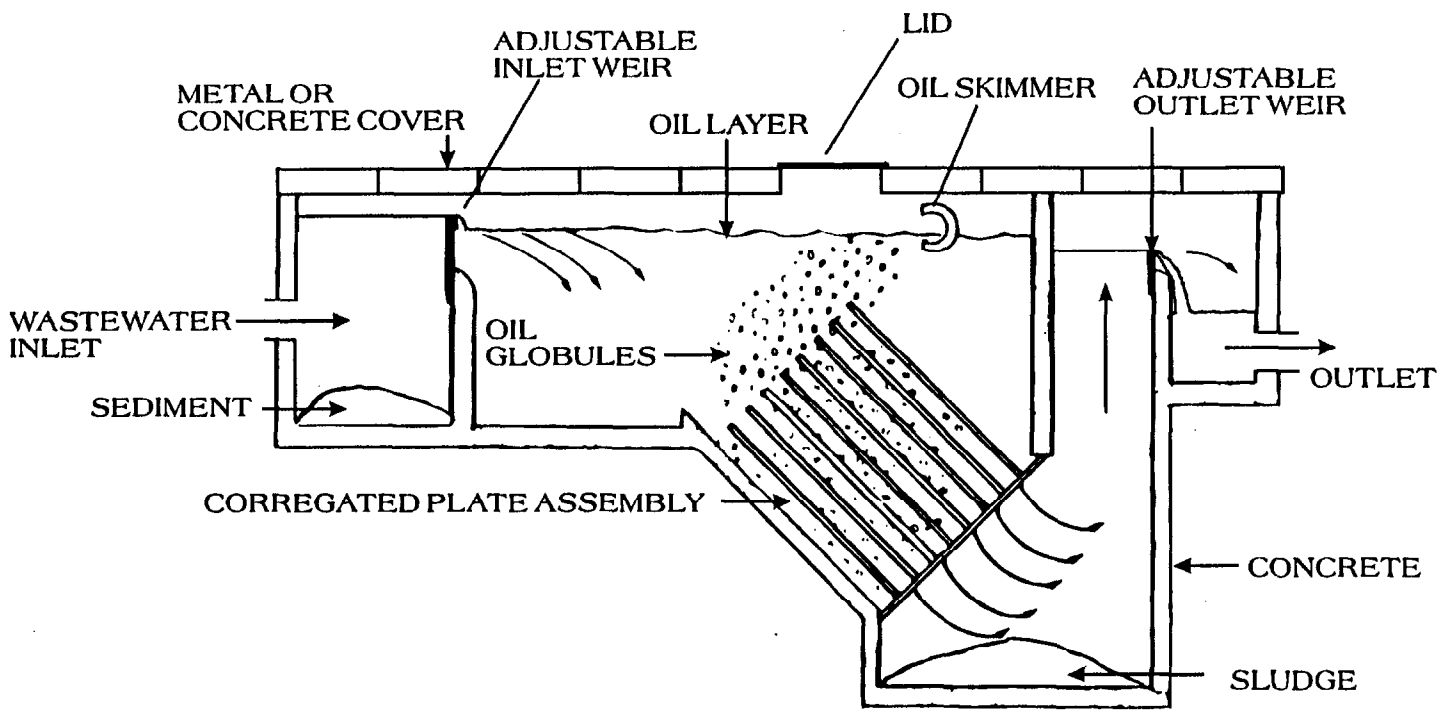

Figure 303.4 CPI Separator

303.3.4 Dissolved Air Flotation Units (D.A.F.)

Dissolved air flotation (DAF) is a common process used to remove entrained oil from the water effluent from gravity separators. The vessels now must usually be covered. They are round or rectangular in shape and are sometimes built into the ground (Fig 303.5).

In the DAF process, a portion of the wastewater is mixed with compressed air and held in a retention tank at 40 to 60 psig for one to five minutes to dissolve the air into the water. The effluent is then released out of the retention tank and flows into the flotation chamber at atmospheric pressure, causing microscopic bubbles to form in the liquid and move to the surface. Oil and suspended particles attach to the bubbles and move to the surface, forming a froth layer on top of the water. Scrapers or skimmers are then used to continuously remove the froth from the water. It takes about ten to thirty minutes for the wastewater to flow through the retention tank.

Salts of iron and aluminum, which are called flocculating agents, are often added to the effluent to improve the efficiency of air bubble and oil attachment. The skimmed froth from the process is then combined with other sludges for treatment and disposal.

303.3.5 Trickling Filters

The trickling filter process is an aerobic biological process to remove bacteria and finely suspended organic matter from wastewater. It is usually used to reduce the load on activated sludge or biological oxidation systems.

During the process, wastewater is sprayed on a bed of packing. The packing can be various shapes that are designed to have a large surface area. The packing in the bed is covered by a layer of bacteria and protozoans and the large surface area provides a space for the organisms to live. Bacteria break down hydrocarbon molecules and protozoans consume the bacteria.

The whole process works like a food chain with one organism consuming another. The process changes much of the petroleum in the wastewater to carbon dioxide and water.

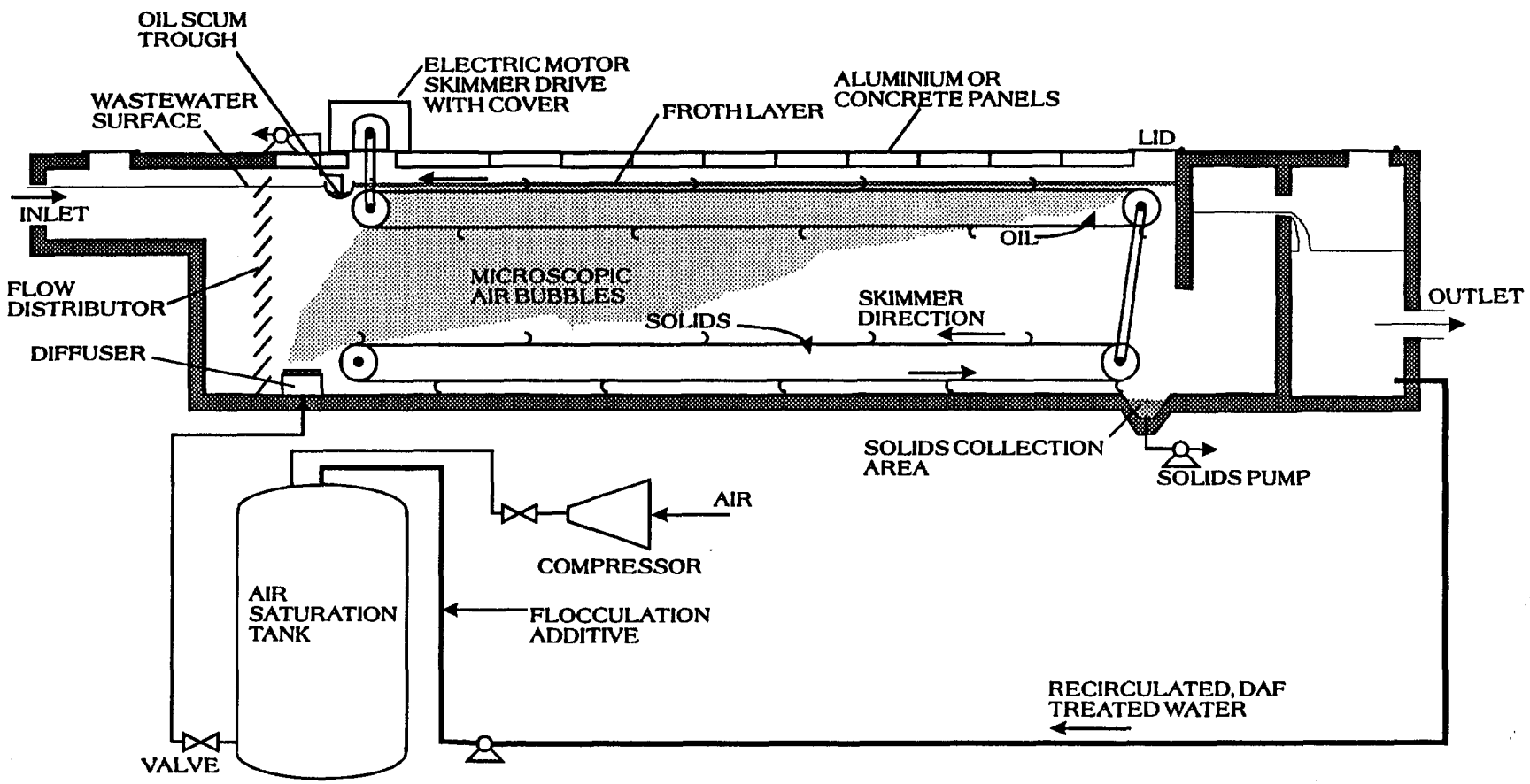

Figure 303.5
Dissolved Air Floatation Unit

303.3.6 Biotreaters

A biotreater is a pond or tank used to break down petroleum globules in wastewater by the use of bacteria, algae, and other organisms. The process is also called the **activated sludge** or **biological oxidation** process and the vessels may also be called "Biox cells" (Biox is short for biological oxidation), or "bioreactors." The mass of organisms is called "activated sludge" or sometimes simply "bugs." The activated sludge has a greenish-brown color and a characteristic odor.

Wastewater flows into the activated sludge system, which is constantly mixed to distribute the organisms and to provide air to the organisms. This mixing and aeration can be accomplished by bubbling compressed air through the mixture, by circulating the mixture through pumps, by paddles or other methods. Retention time for the water in the vessels may be from five to seven hours. This allows time for the bugs to digest the petroleum, producing carbon dioxide, water and more bugs.

After wastewater leaves the biotreater, it goes to clarifier tanks where the organisms are removed from the water. In the clarifier, the live organisms settle to the bottom and are recycled back to the biotreater cells. The clarified water flows through a system of weirs and out of the system. A skimmer on the surface of the clarifier removes dead organisms and other scum which can be mixed with the DAF froth and dewatered.

Biotreaters are currently used more often in refineries in California than trickling filters. The activated sludge process is preferred to the trickling filter process because a high rate and degree of organic stabilization is possible.[1] Disadvantages of the activated sludge process include: high operating cost because of the large amount of mechanical equipment that must be bought and maintained in order to mix and aerate wastewater, higher possibility of operational upsets and, the system is not able handle shock loadings as well as other systems.

The vessels in the biotreating system generally do not require covers because hydrocarbon emissions are very limited. The biotreaters have been known to be the source of offensive odors. Problems with odors may occur when the unit is upset by wastewater which contains chemicals harmful to the bugs.

Refineries in the South Coast AQMD and the San Joaquin Valley Unified APCD usually send their wastewater to municipal or city wastewater treatment systems, so they generally do not use biotreaters. All the refineries in the Bay Area AQMD must use biological treatments, since they release their wastewater into the bay.

303.3.7 Coagulation-Sedimentation

The coagulation-sedimentation process involves putting chemical additives into the water. These include flocculents such as alum, copperas, ferric sulfate, ferric chloride, chlorinated copperas and polyelectrolytes. Adding the chemicals reduces the amount of phosphorus in wastewater, reducing algae growth. The chemicals also help bring together suspended matter for more efficient sedimentation. After the chemicals are added, the water is run through flocculation tanks and sedimentation or clarifier tanks. The efficiency of the process depends mainly on the pH of the water and amount of the coagulating chemicals added. The disadvantage with this process is the cost of the chemicals necessary for the process, making it more expensive than using CPI or API separators.

303.4 FINAL TREATMENT PROCESSES

Some of the final processes used to remove residual pollutants from wastewater are explained in the following sections. They include: oxidation ponds, aerated lagoons, chlorination, membrane separation, and filtration.

303.4.1 Oxidation Ponds and Aerated Lagoons

Oxidation ponds are large, shallow ponds less than six feet in depth where algae and bacteria are made to grow to eliminate wastes. Water stays in the pond for a long period of time, 11 to 110 days. Oxidation ponds have a very large surface area, no equipment to mix the wastewater, and are economical if land is available. Solids from the wastewater and from the organisms tend to settle out in these ponds and can form a thick layer on the bottom. This can promote the growth of anaerobic organisms and significant odors can result. The solids buildup must be removed from time to time and this process can also result in strong odors.

Aerated lagoons are smaller and deeper than oxidation ponds, but they perform the same function. Aerated lagoons are equipped with mechanical or diffused aeration units and they have a shorter retention time. Water is usually kept in them three to ten days. Aerated lagoons can handle wastewater with a higher concentration of contaminants.

303.4.2 Chlorination

Chlorination is a process used to kill harmful bacteria in water and 99% or more of the bacteria can be destroyed with the process.[1] Chlorine, calcium hypochlorite, and sodium hypochlorite are chemicals usually used to perform the chlorination.

303.4.3 Membrane Treatment

Membrane treatment involves using a semipermeable membrane to concentrate and remove particulates from the wastewater with a diameter between 0.001 and 10 microns. Some membrane process include: electrodialysis, reverse osmosis, microfiltration, and ultrafiltration.

303.4.4 Filtration

Water treatment systems which discharge directly into a public waterway must satisfy modern bioassay tests which measure toxicity with respect to fish. In an effort to reduce toxicity of the water effluent, many refineries, especially in the San Francisco Bay Area, have installed activated carbon filters which are effective at removing trace amounts of organic molecules and other possible toxins.

The most common type of carbon is granular activated carbon (also called GAC- and sometimes pronounced "gak"). The carbon can often be regenerated at off-site facilities which have specific air quality Permits for the regeneration furnaces. Any attempt to regenerate the carbon on the refinery premises would require a separate Permit to Operate.

In order to prolong the life of an activated carbon bed, sand filters or other prefilters are sometimes used to remove sediments from the water before entering the carbon bed.

The operation of sand and activated carbon filters generally do not pose air quality problems and the process will be of limited interest to the inspector. Bulk loading of the carbon might require dust prevention, but the loading is generally accomplished by using a water stream to slurry the carbon in and out of the vessel.

303.5 WASTEWATER TREATMENT VAPOR RECOVERY

Some refineries now have vapor recovery systems which sweep the gravity and flotation separators. Vapors from the wastewater may be compressed and sent to an incinerator or thermal oxidizer.

The oxidizer consists of a combustion chamber and a stack. The air-vapor mixture is not rich enough to maintain the combustion, so natural gas or fuel gas is added to enrich the mixture.

Vapors recovered from wastewater treatment systems may also be sent through activated carbon filters. Carbon filters are expensive and they may be used as a backup system for an oxidizer or other system.

In another variation, gravity and flotation separators are in pressure vessels and are gas blanketed. These vessels vent to a flare system.

The addition of a closed vent system with vapor recovery does affect the method used to inspect the unit. The closed vent system is inspected with a hydrocarbon analyzer (OVA, TLV, etc.) and the EPA leak limit (40 CFR 60.692-5,e,1) is 500 ppm above the background concentration. The inspection of a system without vapor recovery would normally involve checking for gap criteria.

Facilities which vent to a flare system would normally trigger NSPS 40 CFR 60.18 which affects flare operation. This is discussed more thoroughly in section 202, Blowdown Systems and Flares. Vapor incinerators also have specific requirements and will normally have specific Permit conditions to be met. The flame in the combustion chamber can usually be observed through inspection ports.

303.6 WASTEWATER TREATMENT SLUDGE

The largest source of sludge is the API or CPI separator. Froth from the flotation separator is also a significant source. Another is the yearly removal of sediment buildup from the various wastewater treatment vessels.

The first step in removing water from the sludge is decanting. The sludge is allowed to settle in a tank and the water and/or oil is drained from the top. Sludges are oily solids which collect in the equipment of a wastewater treatment system. When it rains, soil can be washed into the treatment system from hills and land in and around the refinery. When units are washed down and cleaned, sludge from the units and dirt get into the water and end up in the wastewater treatment system. Other sources of the oily solids are the desalter, catalyst fines, coke fines, and various salt deposits.

Disposing of the sludge from the wastewater treatment system can be challenging. Wastewater treatment sludge is a hazardous waste and many landfills will not accept wet hazardous waste. This type of sludge may have to be transported to a Class I landfill. In order to reduce costs, many types of sludge dewatering processes are being tested at various refineries.

Most refineries and contract maintenance companies are using a combination of centrifuges and/or filter presses and/or heated driers to remove the oil and water from these sludges and emulsions. The oils are then collected and recycled to the refining process, the water is dumped into the beginning of the wastewater unit, and the solids can be disposed of as hazardous waste. The dried sludge is sold by some refineries and used as a low Btu fuel in cement kilns.

303.7 RULE DISCUSSION

The Federal NSPS regulation for refinery wastewater systems, which covers equipment built or modified after May 4, 1987, is under 40 CFR 60 Subpart QQQ. The district rules have standards that are similar to subpart QQQ, but some districts rules have additional requirements. The wastewater rule for the Bay Area, Regulation 8-8, has additional, more stringent standards to protect wildlife in the bay waters. Refineries in the Bay Area release their wastewater into the bay, but other refineries in California send their treated wastewater to public water treatment facilities.

All the wastewater treatment operations have recordkeeping, inspection, and maintenance requirements.

Wastewater treatment can be smelly, and a public nuisance, so rules are somewhat complicated and differ between the districts. The following tables list the major regulated equipment and the main requirements for the EPA (NSPS), Bay Area AQMD, South Coast AQMD, San Joaquin Valley Unified APCD and the San Luis Obispo County APCD. For specific requirements refer to your district rules. Please review your district's regulations and do not assume that the rules included here are up to date or complete. This list of rules is included for guidance and is not intended to be an authoritative list of applicable regulations.

303.7.1 Exemptions

There are a few exemptions in wastewater treatment rules. If a wastewater separator is very small it may be exempt from some regulations. Wastewater that has a very low concentration of organic compounds or has a very low temperature may have exemptions in some rules. The lower the temperature of wastewater, the lower the rate of hydrocarbons that will change from the liquid phase in the wastewater to the gaseous phase and enter the atmosphere. In the Bay Area, for example, if the wastewater has a temperature less than 68^0 F and if the concentration of hydrocarbons is less than 1.0 ppm by volume or less, the wastewater is exempt from some rules. Some equipment that exclusively holds rainwater or non-contacting cooling water may also be exempt from some rules. Rainwater from storage tank roofs is not exempt from rules; district inspectors may check valves on storage tank roof drains for fugitive emissions.

Table 303.1
Process Drain Requirements

District	Regulation	Limits
EPA (NSPS)	60.692-2, a, 1	Drains must have water seal controls (P-traps).
EPA (NSPS)	60.692-2, a, 2	Each drain in active service checked initially and monthly for low water levels and VOC emissions.
EPA (NSPS)	60.692-2, a, 3	Each drain out of service checked initially and weekly for low water levels and VOC emissions.
EPA (NSPS)	60.692-2, a, 4	Plugs or caps over drain must be inspected semiannually.
EPA (NSPS)	60.692-2, a, 5	Repairs must be done to caps or plugs within 24 hrs.
SCAQMD	1176 c, 3, B	VOC emissions must be less than 500 ppm.
SCAQMD	1176 e, 2	Inspections are done monthly.
SCAQMD	1176 e, 3	Repairs must be done in 3 days.

Table 303.2
Sewer Line Requirements

District	Regulation	Limits
EPA (NSPS)	60.692-2, c, 1	No cracks or openings to the atmosphere are allowed.
EPA (NSPS)	60.692-2, c, 2	Unburied portions of sewer lines inspected initially and semiannually.
EPA (NSPS)	60.692-2, c, 3	Repairs must be done in 15 days.
SCAQMD	1176 c, 3, A	Fixed covers with no gaps; no liquids exposed to the atmophere.
SCAQMD	1176 e, 3	Repairs must be done in 3 days.

Table 303.3
Junction Box Requirements

District	Regulation	Limits
EPA (NSPS)	60.692-2, b, 1	Must be covered. Vent pipe no wider than 4 in. in diameter and at least 3 ft. long.
EPA (NSPS)	60.692-2, b, 2	Covers must have tight seals around the edge.
EPA (NSPS)	60.692-2, b, 3	Inspected initially plus semiannually.
EPA (NSPS)	60.692-2, b, 4	Repairs must be done within 15 days.
BAAQMD	8-8-308	Solid, gasketed, fixed cover. The total open area of covers cannot exceed 12.6 sq. in. and vent pipes must be at least 3ft. long.
SCAQMD	1176 c, 3, C	Must be totally enclosed by a solid, gasketed fixed cover. Vent pipe no wider than 4 in. in diameter and at least 3 ft. long. Manhole covers can have openings no larger than 4 in. in diameter.
SCAQMD	1176 e, 3	Repairs must be done within 3 days.

Table 303.4
API/CPI Separator Forebay Requirements

District	Regulation	Limits
SCAQMD	1176 c, 3, A	Must be totally enclosed by fixed covers.
SJVUAPCD	463.4, IV, C	Must be covered.

Table 303.5A
EPA (NSPS) API/CPI Separator Requirements

Regulation	Limits
60.692-3, a	Must have a fixed roof with no gaps.
60.692-3, a, 3	Roof openings must be gasketed and closed.
60.692-3, a, 4	Roof seals and opening inspected initially and semianually.
60.692-3, a, 5	Repairs done within 15 days.
60.692-3, b 60.692-5, a	If capacity is over 250 gpm, a closed vent system and control device with 95% efficiency is required.
60.692-3, f	Pressure control valve should not vent continuously.

Table 303.5B BAAQMD API/CPI Separator Requirements	
Reg.	Limits
8-8-302	(Includes forebay) For separators operating with over 300 gpm, one of the following must be included:
8-8-302.1	1. A solid, vapor tight (500 ppm), fixed cover, fully contacting and totally enclosing the contents. Cover opening must be sealed.
8-8-302.2	2. A floating pontoon or double-deck vapor-tight cover that rests on top of the tank contents. A primary and secondary seal are required. The primary seal gaps cannot exceed 1.5 in. No continuous gaps over 0.125 in. shall exceed 10% of the perimeter. The cumulative length of all primary seal gaps exceeding 0.5 in. shall not be more than 10% of the perimeter. The cumulative length of every primary seal gap exceeding 0.125 in. shall not exceed 40% of the perimeter.
Wipers & secondary seals	No secondary seal gap can exceed 0.06 in. The cumulative length of all secondary and wiper seal gaps exceeding 0.02 in. shall not exceed 5% of the perimeter. Primary seal gaps must be inspected once every 5 years and secondary seal gaps must be inspected once per year.
8-8-302.3	3. A fixed cover with a 95% efficient vapor recovery system. All hatches must be closed except during inspection, maintenance, etc.
8-8-302.4	4. A solid, fixed, sealed, gasketed cover totally enclosing the contents with all openings closed and sealed except during inspection, maintenance, etc. The fixed cover may have a pressure/vacuum valve. VOC emissions cannot exceed 1,000 ppm from any area. Roof seals, covers doors and all other openings must be inspected initially and semiannually.

Table 303.5C
SCAQMD API/CPI Separator Requirements

Reg.	Limits
1176 c, 2	Either of the following: A. A floating cover with seals that rest on top of the contents meeting gap criteria. Cover must be replaced every 5 yrs. unless it has never been in violation. B. A fixed cover equipped with a closed vent system that directs vapors to a 95% efficient control device. No leaks over 500 ppm are allowed.
1176 d, 1	Covers must be impermeable to VOC's, free of holes, and tears.
1176 d, 1, 6	Floating cover gap requirements: gap between wall and seal cannot exceed 0.5 in. Cumulative gaps over 0.125 in. cannot exceed 97% of the perimeter.
1176 e, 1	Inspections of control devices must be done semiannually.
1176 e, 2	Closed vent systems must be inspected monthly.

Table 303.5D SJVUAPCD API/CPI Separator Requirements	
Reg.	Limits
463.4 IV, A	Separator must be equipped with one of the following: 1. A solid cover with all openings sealed and enclosing the contents. Breathing vents are permissible. 2. A floating pontoon or double-deck cover with closure seals with no tears of holes. No gap shall exceed 0.5 in. Gaps must not exceed 0.125 in. for 97% or more of the perimeter and 0.5 in. for 3% of the perimeter. 3. A 90% efficient vapor recovery system.

Table 303.5E SLOCAPCD API/CPI Separator Requirements	
Reg.	Limits
407G	If RVP is greater than 0.5 and flow over 200 gal/day one of the following is required: 1. A solid cover with all openings sealed and enclosing the contents. 2. 2. A floating pontoon or double-deck cover with closure seals (no gap criteria). 3. A 90% efficient vapor recovery system.

Table 303.6
Gauging and Sampling Devices

District	Reg.	Limits
EPA (NSPS)	60.692-3, a, 3	Access doors and other openings must be gasketed, latched, and kept closed except during inspection and maintenance.
BAAQMD	8-8-303	Must have vapor tight cover (500 ppm limit), seal or lid. Covers must be kept closed except during inspection, maintenance or sampling.
SCAQMD	1176 d, 3	Hatches must be kept closed and free of gaps, except when opened for inspection, maintenance or repair.
SJVUAPCD	463.4 IV, B	Device must have a cover that is closed at all times except when the device is in use.
SLOCAPCD	407 G	Must have a cover that is closed at all times except during inspection, maintenance or sampling.

Table 303.7 DAF/DNF/IAF Requirements (includes effluent between API/CPI and DAF)		
District	Reg.	Limits
EPA (NSPS)	60.692-3, a	Fixed roof must not have any gaps.
EPA (NSPS)	60.692-3, a, 3 and 4	Roof openings must be gasketed and closed. Roof seals and openings inspected initially and semiannually.
EPA (NSPS)	60.692-3, a, 5	Repairs done within 15 days.
EPA (NSPS)	60.692-3, b 60.692-5, a	If capacity is over 250 gpm closed vent system and control device required with 95% efficiency.
BAAQMD	8-8-307 8-8-307.1 8-8-307.2	Units with a capacity over 400 gal/min must have one of the following: 1. A solid gasketed fixed cover. The cover may have a vent. Doors and all openings must be visually inspected initially and semiannually. No gaps over 0.125 in. allowed. 2. A vapor recovery system with 70% efficiency.
SCAQMD	1176 c, 2	Either of the following (A or B): A. A floating cover with seals that rests on top of the contents and meets gap criteria. B. A fixed cover equipped with a closed vent system that directs vapors to a 95% efficient control device. No leaks over 500 ppm.
SCAQMD	1176 d, 1	Covers must be impermeable to VOCs, free of holes, and tears.
SCAQMD	1176 d, 6	Floating cover gap requirements: Gap between wall and seal cannot exceed 0.5 in. Cumulative gaps over 0.125 in. cannot exceed 97% of the perimeter.
SCAQMD	1176 e, 1 1176 e, 2	Inspection of control devices must be done semiannually. Closed vent systems must be inspected monthly.

Table 303.8
Slop Oil Vessel Requirements

District	Reg.	Limits
EPA (NSPS)	60.692 d&e	Slop oil must be collected, stored, transported, recycled, reused, or disposed in an enclosed system. Vessel may have a fixed roof with a PV Valve. Roof openings should be gasketed and closed. Inspection done semiannually and repairs done in 15 days.
BAAQMD	8-8-305 8-8-305.1 8-8-305.2	Vessel must be equipped with one of the following: 1. A solid gasketed fixed cover totally enclosing the contents. The cover may have a vent. Doors and all openings must be visually inspected initially and semiannually. No gaps over 0.125 in. are allowed. 2. A vapor recovery system with 70% efficiency.
SCAQMD	1176 c, 4	Slop oil must be handled in a manner approved in writing by the Executive Officer.
SJVUAPCD	463.4 IV, D	Skimmed oil or tar must be charged to process units or transferred to a container with a vapor control system with at least 90% efficiency.
SLOCAPCD	407 G	If Reid vapor pressure is greater than 0.5 psia, one of the following is required: 1. A solid cover with all opening sealed and enclosing the contents (no gaps). 2. A floating pontoon or double-deck cover with closure seals (no gap criteria). 3. A vapor recovery system with 90% efficiency.

Table 303.9 Sludge Dewatering Unit Requirements		
District	Reg.	Limits
BAAQMD	8-8-304	Units must be totally enclosed and vented to a control device with a minimum of 95% efficiency or have vapor tight covers (500 ppm leak limit) covering conveyer belts, storage bins and tanks.

303.8 PRE-INSPECTION PROCEDURES

It is important to prepare for the wastewater treatment inspection prior to your visit to the plant. Wastewater treatment rules and Permits can be complicated and preparations must be made for a successful inspection. This section is a discussion of some general guidelines on what steps to follow prior to the inspection.

303.8.1 File Review

Prior to the site inspection, the inspector should review all information available in the district source files including: approved Permits, equipment lists, conditions for each Permit, previous inspection reports, Notices of Violation, breakdown reports, enforcement actions taken, odor complaints, variance histories, alternative emissions control plans, abatement orders, source tests, and the design of the wastewater treatment system.

The inspector may wish to complete some portions of the inspection documentation before arriving at the facility, as this will save time during the pre-inspection meeting. If your district has checklists or rule specific forms, use them.

A suggested inspection form for wastewater treatment systems is included in Table 303.10. The form has been set up with pre-inspection data in the left hand column and the related field acquired data in the right hand column. Completion of the pre-inspection portion prior to the site visit may help the inspector in the field to quickly determine whether or not the equipment meets the Permit and regulatory requirements.

303.8.2 Regulation Review

You should review any references to the specific rules which are noted in the source files. In particular be familiar with each standard and exemption in the rules. Discuss wastewater regulations with experienced personnel and review any policies your district may have. Make sure that you receive consistent interpretations on how to apply the requirements of rules. Short summaries of the district and federal regulations are included in Tables 303.1 through 303.9. Please review the most recent version of your district's regulation in their entirety and do not assume that the tables here are up to date or complete. These tables are included for guidance and comparison and are not intended to be an authoritative list of applicable regulations.

303.8.3 Equipment Check

Make sure that you have the following equipment available for use during the inspection: vision protection, hearing protection, safety shoes, fire retardant coveralls, hard hat, gloves, identification, business cards, pens, wipes, inspection forms, chain of custody forms, hydrocarbon analyzers, self contained breathing apparatus, sampling cans, can case, labels, soap solution, and thermometer.

303.8.4 Pre-entry and Entry

When you arrive at a the wastewater treatment plant, notice if there are any strong odors. If there are any odors, make sure you document them and plan on finding the sources as soon as possible after entering the facility.

Request to see the previous contact mentioned in the files. Depending on the facility, it may be the environmental coordinator, supervisor, president, maintenance worker or operator. Always present your business credentials immediately to avoid confusion.

Table 303.10 WASTEWATER TREATMENT INSPECTION FORM A	
Pre-Inspection:	Field Inspection:
Facility name: Unit I.D. number:	Date/time:
Permit number: Permit expiration date:	Inspector: Agency:
Facility address:	Facility contact person(s)/title(s):
Date unit was built or last modified:	
Junction Boxes	
Do Junction boxes require gaskets?	Lids closed? Any holes in the lids? Is there a gasket on the lids?
Trash Screens	
Is a trash screen installed?	Are trash screens and other debis collection areas completely covered?
API and CPI Separators	
Permit number: Expiration date: Date system was built or last modified:	Are all covers and access doors closed? Are all covers gasketed? Number and location of covers without gaskets:
Does the separator have a fixed roof or floating roof? Gap criteria (if applicable): Condition of roof at last inspection:	Condition of roof and seals: Gap violations: width: length: location:
Is separator vented to a vapor recovery system? Maximum leak limit (if applicable) (ppm):	Is vapor recovery system connected and in proper operation? Hydrocarbon leaks (ppm):

Table 303.11 WASTEWATER TREATMENT INSPECTION FORM B	
Pre-Inspection:	Field Inspetion:
DAF/DNF/IAF	
Permit number: Unit number: Expiration date: Date system was built or last modified: Do NSPS regulations apply? Do district regulations apply to DAF?	Are there any excessive offensive odors? Location of odor source:
Are roofs required on the DAF? Are cover gaskets required? Maximum gaps allowed:	Is the unit completely covered? Are all accesses and covers closed? Are all lids gasketed? Number and location of joints without gaskets: Gap exceedances: Width: lenght: location:
Is a vapor recovery system required? Maximum leak limit (ppm):	Is vapor recovery system connected and in good working condition? Are pressure relief valves venting? Hydrocarbon leaks: Area: ppm: 1. 2. 3.
Other Permit requirements:	
Biotreater/Ponds	
Unit number: Permit number: Expiration date:	Are there any excessive offensive odors? Location of odor source: Any uncovered basins contaminated with oil?

If the source is unfamiliar with your district's authority, be prepared to cite and provide copies of California Health & Safety Code (CHSC) Section 41510: Right of Entry (a copy is available in the appendix). Know and follow your district's policy when the facility refuses entry.

303.8.5 Pre-inspection Meeting

Before the inspection begins, the inspector should meet with the source representative to obtain operating information. The inspector should state the purpose of the inspection and identify the equipment which will be inspected. Facility information can be verified during this meeting, including: the facility name and ownership, address with city and zip code, contact name, contact title, phone number and area code. Discuss safety procedures and whether or not there have been any odor problems in the past. Request a copy of material safety data sheets (MSDS), and if necessary discuss sampling procedures. You should request to see a copy of the Permit(s) for the facility and check to see if the Permit(s) is current and valid. Also, check existing Permit conditions and ask if any changes have been made to the operation which are not reflected in the Permit.

The district's equipment list on the Permit to Operate should be compared to the facility's Permit to Operate. The items should be the same. If they are not, a Notice of Violation may have to be issued. Also, check existing Permit conditions and ask if any other changes have been made to the operation which are not reflected in the Permit.

303.9 WASTEWATER TREATMENT INSPECTION

The inspection of the wastewater treatment system is generally conducted by checking equipment for hydrocarbon leaks, closure criteria and odor sources. As with valves and flanges, leaks can be detected by looking for a "heat haze" or by using an analyzer such as an OVA (organic vapor analyzer) or TLV (threshold limit value) analyzer.

303.9.1 Junction Boxes

Junction boxes are structures where two or more process sewer lines come together. They are usually concrete boxes with metal lids. There should not be any holes or openings in the junction box and the lid should be closed. If

necessary, open the box and see if there is a gasket where the moving lid and stationary box interface. There should be a gasket on the lid or box.

303.9.2 Trash Racks

Trash racks are where some refineries put debris from the wastewater treatment system. Trash racks should be kept closed and not leaking hydrocarbons. Check the joints where the trash rack door opens for gaps and (if applicable) with an analyzer.

303.9.3 Oil/Water, API and CPI Separators

All wastewater separators (including API and CPI separators) should be totally covered. Look over the entire unit and make sure all the lids and access doors are closed.

Run the probe of an analyzer around the openings of all access doors, if applicable, to make sure that any hydrocarbon emissions are below the limit on the Permit or rule. Check emergency pressure relief valves for hydrocarbon leaks with an analyzer. Some separators may have some of their electric motors enclosed in boxes. Check around the lids of the boxes with an analyzer if leak limits apply.

Most **access doors** must have **gaskets** at the door and box interfaces to prevent emissions. Open all access doors, if necessary, and make sure gaskets are installed on the lid or on the non-moving "box". District rules or Permits require many doors or covers to be gasketed.

Take the appropriate gauge and check all the gaps in the separator and roof that are above ground and exposed to the air. Gaps can often be found where chains go down into the separator to adjust the level of skimmers, motor axles for sludge pumps and skimmers, and supports on the separator. The gap between any rubber seals and axles or chains should not exceed the dimensions allowed in the closure criteria rules or Permits.

If a separator is equipped with an automatic **rake** make sure that the doors for it are closed. Check around the device with an analyzer to find hydrocarbon leaks. All gaps must satisfy closure criteria rules.

If a separator is equipped with a **floating roof**, it is inspected similarly to a floating roof tank as discussed in section 302. If a separator has a floating roof, the separator roof must have a secondary and primary seal. Check the circumference of the **secondary seal gaps** for the maximum allowable gap. The rule or Permit to Operate will state the maximum gap allowed in the seal. Check the perimeter of the seal with the small gapping tool for continuous gaps. Mark the perimeter of the separator, where the gaps are exceeded, with chalk and add them up. The length of the gap should not exceed the percentage of the total perimeter stated in the rule or Permit. Calculations for the cumulative length and percentage may be done later, but make sure you write down all the data.

Primary seal gaps are checked similarly to the secondary seal gaps. Pull back the secondary seal and check the perimeter to make sure the maximum gap is not exceeded. Check the cumulative gaps with the smaller gauge, add them up and make sure they are not over the maximum allowable percentage of the total circumference.

303.9.4 Dissolved Air Flotation (D.A.F.) Units

Dissolved air flotation units or DAFs and DNFs must be totally covered in some districts and in all new facilities. All the openings in DAF covers must be closed unless personnel are conducting gauging, sampling or repairs. As with API and CPI separators, all the doors should be gasketed and closed. Check all access door interfaces with an analyzer if leak limits apply to the DAF. Check all emergency relief valves with an analyzer. If the DAF is connected to a vapor recovery system, make sure it is leakproof.

There must not be any cracks or gaps in the DAF that exceed the closure criteria rules or Permit. Take the right size gauge, as illustrated in the district rule or Permit, and check the size of any gaps, making sure that none of them exceed the gauge.

303.9.5 Biotreaters

In general, the equipment after the dissolved air flotation unit does not need to be covered. Very little oil is usually in the wastewater after it goes through the DAF. Biotreaters generally do not have to be covered. The only inspection required is usually for odors only.

Check downwind of a biotreater for any odors. It is common to have some odor, but if the odor is strong, there may be a problem with the system. Odors are the most common complaints about refineries.

303.10 POST-INSPECTION PROCEDURES

Prior to leaving the wastewater treatment system, the inspector should evaluate the compliance status of the plant and should have obtained all the information necessary to complete the inspection form. Make sure you have acquired all the necessary documents to determine the compliance of the wastewater treatment operation.

The facility should be informed of the results of the inspection, advised of areas of concern where additional information or investigation is needed, or given a Notice of Violation (NOV) as soon as possible. Be prepared to make your compliance determinations, calculate excess emissions, and issue all necessary violation notices. Be able to document future NOVs which may be pending due to sample results or additional information requests. **All violations should be followed up**, consistent with your district policy, to ensure that the source is brought into compliance.

304 COOLING TOWERS

304.1 INTRODUCTION

In many unit operations, it is necessary to cool or condense hot oil and/or vapor streams. This is often accomplished by passing the hot fluid through a heat exchanger (described later) where heat is absorbed by a separate stream of cooling water. The hot cooling water is then recooled using ambient air in a structure called a cooling tower (Figure 304.1) and is then recycled to another heat exchanger. Of interest to the air pollution inspector is the fact that hydrocarbons do sometimes leak through the heat exchangers into the cooling water, and then may be vaporized into the atmosphere at the cooling tower.

There are also air quality regulations which prohibit the use of certain additives containing hexavalent chrome in the cooling water. Hexavalent chrome is highly toxic and is detrimental to both air and water quality.

Estimates for VOC emissions from cooling towers in petroleum refineries are shown in Table 304.1. These estimates are from the 1989 CARB emission inventory and were generated originally by the refineries themselves. The emissions cannot be measured directly and are estimated using emission factors, such as those found in the EPA's AP-42, Compilation of Air Pollutant Emission Factors. These numbers indicate that about 4 percent of a refinery's VOC emissions may be from cooling towers. These VOC emissions can vary widely depending on the maintenance habits practiced by the individual refineries.

Table 304.1
VOC Emissions From Cooling Towers
1989 CARB Emissions Inventory

District	VOC Emissions (tons/year)
BAAQMD	470
SCAQMD	390
SLOCAPCD	3
SJVUAPCD	70

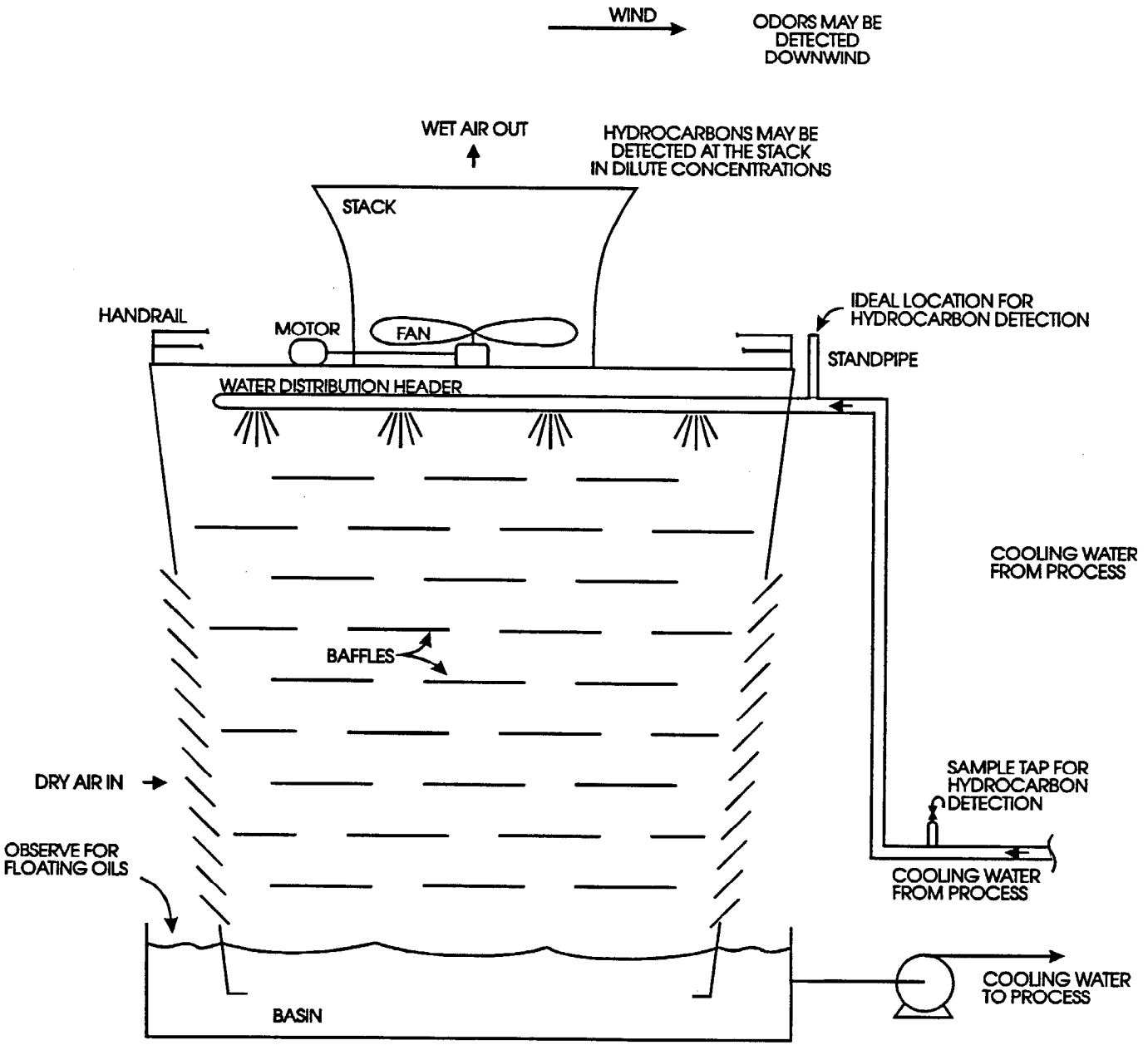

Figure 304.1
Simplified Cooling Tower

304 COOLING TOWERS

This section is designed to help you, the field inspector, to conduct a quick compliance inspection of cooling towers. The location and service of the equipment should not have a major effect on how it will be inspected. The operation of cooling towers is similar throughout the refinery and the inspection procedure should not vary significantly from one unit to another.

After a short description of how a cooling tower works and how they are used in refinery processes, we will address how to assure that a cooling tower is not emitting excess pollutants.

304.2 PROCESS DESCRIPTION

The primary elements of concern to the air quality inspector with respect to a cooling tower system are the associated heat exchangers and the tower itself. The water transfer system (which includes pumps, valves and piping) is generally not subject to the fugitive emissions regulations which would normally govern these components. These components are typically exempt by definition because the system should normally contain only water, with little or no VOC's.

304.2.1 Heat Exchangers

A heat exchanger is a device used to transfer heat from a relatively hot fluid stream to a relatively cool fluid stream. The cool stream could be oil, water or vapor, etc., but in this section, we will discuss only the situation where the cool stream is cooling water. A simplified heat exchanger is shown in Figure 304.2.

In a heat exchanger, the cooling water (or the fluid most likely to cause solid deposits) will typically flow through thin walled metal tubes. The hot fluid typically flows between the tubes through the space on the outside of the tubes. Heat is transferred from the hot fluid through the metal walls of the tubes into the cooling water. The temperature of the hot fluid will drop or, in the case of condensers, the hot vapor will condense to liquid and the temperature may remain relatively constant. The temperature of the cooling water will usually rise from somewhere below 80 °F to between 100 °F and 150 °F.

Why Do They Leak?

The amount of heat which can be transferred by a given heat exchanger is a function of three factors: 1) the fluid temperatures, 2) the surface area of all of the tubes in the exchanger, and 3) the ease with which heat can flow through the tube walls, known as the heat transfer coefficient. We can assume that the fluid temperatures are determined by the unit process. The exchanger designer can then influence the surface area and the heat transfer coefficient to obtain the required amount of cooling. Heat exchangers are very expensive and the cost increases rapidly as the surface area increases. One goal of the designer is to reduce costs by limiting the surface area required. Consequently he/she must maximize the heat transfer coefficient.

To maximize heat transfer, the tube wall is kept as thin as possible. And how do they determine if a tube wall is too thin? They estimate the rate of corrosion of the tubes and estimate when the tubes may corrode through and leak (more accurately, they estimate when a certain minimum thickness will be reached.) These estimates are rough and there are many situations when the corrosion rate is higher than expected and leaks occur.

Both corrosion and erosion contribute to the thinning or pitting of the tube wall. Corrosive pitting is most common where deposits form in or on the tubes, often in areas where the fluid moves slowly. Erosion is the abrasive wearing away of the tube wall by a rapidly flowing fluid, perhaps with entrained solids. Exchanger leaks often start slowly and get progressively worse.

Most cooling systems are designed so that if a leak occurs, the direction of leakage will be from the oil side into the cooling water rather than risk having the cooling water leak into the oil stream. This is often due to safety concerns and/ or product contamination concerns; and is accomplished by maintaining the oil side at a higher pressure than the cooling water. For example, if water were to leak into a hot oil stream, it might flash vaporize and overpressure the entire process system. This could be much more serious than a hydrocarbon emission at the cooling tower.

When an exchanger leak occurs, it is usually detected at the cooling tower (sooner or later) and then a search for the source begins. The effluent water from many exchangers may be tested to identify the leak source. If the leaking exchanger can be located and removed from service, it will probably be promptly repaired. In rare cases, if the exchanger removal will impede operations or

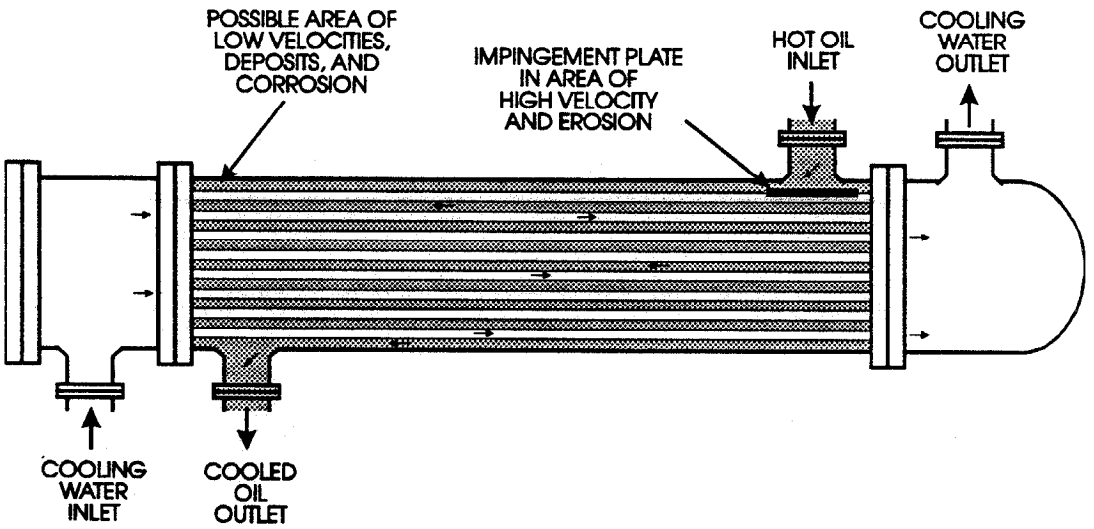

Figure 304.2
Heat Exchanger (Simplified)

require a shutdown, the refiner may choose to let it continue to leak for a time. This would be unsafe as well as a source of pollution. The air quality inspector should discourage this practice.

304.2.2 Cooling Towers

Cooling towers are generally large rectangular structures, divided internally into a few independent cells (Fig. 304.1). At the top of each cell, is a short and wide stack which contains a large fan, used to draw air through the system. Steam plumes can usually be seen coming from the stacks of cooling towers, depending on the weather conditions.

Hot or warm cooling water from the many exchangers is combined and pressured to a distributor at the top of the cooling tower, and is sprayed out over the length and width of the tower. The water trickles and splashes down through baffles or other packing which increase the air-water contact area. Large fans located at

the top of the tower draw fresh air up through the trickling water, causing evaporation and cooling of the water. The cooled water is collected in a basin at the bottom of the tower and is then pumped back through the heat exchangers.

Just as the water evaporates, any light oils present will also evaporate in the tower and will be blown out of the top by the fans. Heavier oils may not evaporate and may collect as a layer on the water in the bottom basin. These heavier oils in the basin are often easy to observe. The hydrocarbon vapors leaving the top of the tower may be difficult to detect.

Where the water enters the tower, there is sometimes a **standpipe** to prevent pressure surges and to aid in the water distribution. The standpipe is an open ended vertical pipe rising from the water inlet line to above the top of the tower. If this pipe is accessible, it may be a good point to test for hydrocarbon vapors, since they might tend to accumulate there. The area just above the water distributors may also be a good place to check for vapors.

Any other volatile compound which could leak into the system, for example H_2S, may also be vaporized in the cooling tower. These emissions can lead to foul odors and public complaints. But at least when there is an odor, there is an obvious indication that a leak is occurring.

Good Operating Order

"Equipment must be kept in good operating order" is a common requirement found in Permits to Operate. This is especially important for cooling towers. If a cooling tower were to fail and could not provide cooling, some units may have to shut down immediately, resulting in excess shutdown and start-up emissions. A tower whose performance has deteriorated and cannot provide adequate cooling may limit the unit's ability to condense hydrocarbon vapors and result in vents to the flare system.

Wooden structures tend to rot, weaken, and become very flammable while metal components tend to rust heavily. This applies to walkways and stairs also, so **watch your step**. The large fans can fail or become unbalanced and ripped from their supports, and sparks may ignite the wood.

Hydrocarbon Analyzers

Some cooling towers are equipped with hydrocarbon analyzers to detect exchanger leaks and to prevent fires. These analyzers may be in the air stream to detect vapors, in the standpipe, in the basin to detect oil on the surface, or in the water return line from the exchangers.

304.2.3 Reducing VOC Emissions

Cooling tower emissions can best be controlled by reducing the frequency and duration of leaks at the heat exchangers. Good exchanger inspection and maintenance practices and proper exchanger operating procedures are the keys to reducing the frequency of leaks. The operating conditions of an exchanger can greatly influence the rates of corrosion, erosion, and fouling. Operators should be kept well informed of proper operating techniques and design characteristics for their heat exchangers.

When a leak does occur, the duration can be minimized by prompt detection of the hydrocarbons and speedy repair of the leak. Prompt detection of hydrocarbons in the cooling water may be accomplished by analyzers, as discussed above, or in some cases by a cognizant operator making his rounds of the unit. Good housekeeping programs are also very beneficial to early detection of leaks.

304.2.4 Hexavalent Chrome

Chromate solutions (for example sodium dichromate and lead chromate) were a common additive to cooling water to reduce corrosion and scaling in heat exchangers and other equipment. A portion of the chrome in these compounds was sometimes in the hexavalent form, a highly toxic ion. Recently, regulations have been adopted to eliminate the addition of hexavalent chrome containing compounds to cooling towers.

304.3 RULE DISCUSSION

Only a few regulations specify cooling towers and these prohibit the addition of hexavalent chrome. The various fugitive VOC emission regulations are generally specific to other equipment (such as valves, pumps, storage tanks, and wastewater treatment systems) and may not apply to cooling towers. However, some

districts do have more general VOC emission limitations which will include cooling towers. Public nuisance rules will also apply to this equipment. Table 304.2 lists many of the regulations which apply to cooling towers.

At least one district has cited a visible emissions violation by a cooling tower. This occurred when the tower caught fire and smoked. However, the VE regulations have not been included in Table 304.2.

304.3.1 Hexavalent Chrome

The rules prohibiting the use of hexavalent chrome generally include the following provisions:

1) Hexavalent chrome shall not be added to a cooling tower system.
2) Periodic testing of the water may be required.
3) Cooling tower shall not be operated if hexavalent chrome level is higher than 0.15 milligrams per liter.

304.3.2 Hydrocarbon Emissions

Each air district should develop a written policy concerning how to deal with VOC emissions from cooling towers. As we stated, few districts have general VOC emission limitations, the exception being the BAAQMD's Regulation 8 Rule 2. However Reg. 8 Rule 2 specifically exempts cooling towers "provided best modern practices are used."

Best modern practices are presented in EPA-450/2-78-022, Control Techniques for Volatile Organic Emissions from Stationary Sources in section 4.1.3. This document indicates that:

- hydrocarbon detectors should be installed,
- exchangers should be well maintained,
- leaks should be quickly repaired, and
- good housekeeping procedures should be followed.

Some cooling towers have individual Permits to Operate while others may be included in a Permit for the entire unit. Most of these Permits require that the equipment be kept in good working order. A leaking system could not be considered good working order and this may provide an avenue for enforcement. In many cases, an exchanger leak could be considered a breakdown of equipment

Table 304.2
District Regulations Affecting Cooling Towers

District	Regulation	Limit
BAAQMD	8-2-114	Requires "best modern practices" with respect to VOC emissions.
SCAQMD	1404(b)(1)	Shall not add materials with hexavalent chrome to cooling water.
SCAQMD	1404(b)(4)	Shall not operate a cooling tower if hexavalent chrome >0.15mg/liter.
SLOCAPCD	413.C.2	Shall not add materials with hexavalent chrome to cooling water.
SLOCAPCD	413.C.3	Shall not operate a cooling tower if hexavalent chrome >0.15mg/liter.
SJVUAPCD	7012-5.2.1	Shall not add materials with hexavalent chrome to cooling water.
SJVUAPCD	7012-5.2.2.2 and 5.2.3	Shall not operate a cooling tower if hexavalent chrome >0.15mg/liter.
BAAQMD	1-301	Public Nuisance - Odors
SCAQMD	402	Public Nuisance - Odors
SLOCAPCD	402A	Public Nuisance - Odors
SJVUAPCD	4102-4.0	Public Nuisance - Odors

and treated accordingly with an exemption. The decision of enforcement action for this type of emission episode will depend heavily on the compliance history of the facility, on the maintenance records, and on the frequency of this type of occurrence.

Although the Notice of Violation may not be appropriate in some cases for this type of emission episode, cooling towers are nevertheless significant emission sources. They are deserving of a portion of the inspector's time. A quick check for hydrocarbons during each normal unit inspection will encourage the source representatives to take the problem seriously and to assure that proper maintenance, housekeeping , and self-inspection procedures are being followed.

304.3.3 Odors

As with other refinery facilities, public nuisance rules will definitely apply when the source is a cooling tower.

304.4 INSPECTION PROCEDURES

An air quality inspector may be able, in most cases, to inspect a cooling tower in about 30 minutes. Consequently, it is assumed that most cooling towers will be included as a part of some larger inspection, and so this section has been shortened to include only those items that relate directly to cooling towers. The procedures for file review, regulation review, equipment check, pre-entry and entry, inspection meetings, etc., should still be performed although they are not repeated here.

304.4.1 Pre-Inspection

Short summaries of the district regulations for cooling towers are included in Table 304.2. Please review your district's regulations and do not assume that the tables included here are up to date or complete. These tables are included for guidance and comparison and are not intended to be an authoritative list of applicable regulations.

Examine the Permit to Operate for specific equipment requirements.

Regulation Review

You should review any references to the specific rules which are noted in the source files. Discuss the regulation with experienced personnel and review any policies your district may have. Make sure that you receive consistent interpretations on how to apply the requirements of the rule. This may be particularly important with respect to VOC leaks from cooling towers.

Equipment Check

Make sure that you have the following equipment available for use during the inspection: vision protection, hearing protection, safety shoes, hard hat, gloves, fire retarding clothing (e.g. Nomex), identification, business cards, pens, wipes, hydrogen sulfide detector ampoules, and a portable analyzer for hydrocarbons. The hydrocarbon detector should be equipped with a **liquid trap** on the sample inlet to protect the instrument from water.

304.4.2 Facility Inspection Procedures

The goals of the cooling tower inspection will be to:

1) detect any VOC emissions from the equipment,

2) confirm that additives containing hexavalent chrome are not used,

3) confirm that all Permit conditions are met, and

4) note any conditions which would indicate poor maintenance or poor housekeeping practices.

Detection of Hydrocarbons in Cooling Water

There are several observations which can be used to detect whether hydrocarbons are present in a cooling system. These include[7]:

1. Extensive biological growth. Hydrocarbons are food for many organisms, including the various slimes that form in wet systems. Excessive slime growth on the walls, baffles, and decks may indicate the presence of hydrocarbons and an exchanger leak. The unit operator may also find that the rate of chlorination needed to maintain a residual chlorine concentration must be increased if hydro-

carbons are present. Amine leaks into the cooling water may have similar effects.

2. A hydrocarbon detector (OVA, organic vapor analyzer or TLV, threshold limit value analyzer, etc.) can tell you if hydrocarbons are coming from the cooling water return-lines, stacks etc. Always use a liquid trap on the sample line because water will be flying around and can be entrained in the air stream from the stack. A little water can cripple a hydrocarbon instrument. A long sample hose and a probe extension are recommended for reaching into the tower and for reaching above the side of the stack. The stack can extend to well over head height and it may be difficult to get a probe into the air flow.

If possible, sample the air stream from each cell. The hydrocarbons may be easier to detect in cells with a relatively high water rate or a relatively low air rate (slow fan).

The two places where VOC detection may be easiest are in the standpipe and just above the water distributor.

3. A visible distortion or "heat haze" rising from the decks or stacks can indicate hydrocarbon vapors.

4. A shaking and/or noisy cooling water return line can be the result of expanding vapor in the lines.

5. Odors may be detected in the area downwind of the cooling tower. The air flows from the outside, through the walls, and into and up the center of the tower. Consequently, the inspector may not notice any odor sources when standing close to the structure. Document any odors and attempt to determine the source.

6. In many cooling towers, the basin is open enough that the inspector can see the water and perhaps reach it. Look for visible oil or a "rainbow" of colors on the water.

7. It may be necessary to take a sample of the returning cooling water for observation and vapor detection. The refinery representative should be able to help obtain a sample. Have a clear sample bottle available.

Inspectors should verify leaks by using a hydrocarbon detector (OVA, organic vapor analyzer or TLV, threshold limit value). An analyzer must be used to

document and prove violations of gaseous leaks. Using the sight, smell, and hearing senses for leak detection is good only for quickly surveying an area for leaks or when an inspector does not have an analyzer.

Hexavalent Chrome

Note the names and manufacturers of each additive being injected into the cooling water. The additives are usually stored in small tanks near the base of the cooling tower and are injected directly into the basin. Inspect the records which document testing for hexavalent chrome. If there are doubts concerning the use of chrome in a tower, the inspector may take a sample for further evaluation.

Check the Permit to Operate

Check the Permits to Operate for each permitted item and make sure the equipment runs in accordance with permit conditions and district regulations. Permits must be posted and they must be current. When you inspect the equipment, see that it is consistent with the list of equipment in the Permit to Operate and that it has not been altered since the last Permit was issued.

Housekeeping and Maintenance

Observe the overall condition of the structure and surroundings. Are there indications that the structure has weakened, has loose boards, or otherwise has lacked attention? Is there debris in the area which could interfere with maintenance, pumps, etc.? Inform the source if housekeeping and maintenance procedures appear inadequate and make a note in the inspection report. This information will be very useful if a breakdown occurs in the future.

304.4.3 Post-Inspection Procedures

The facility should be informed of the results of the inspection, advised of areas of concern where additional information or investigation is needed, or given a Notice of Violation (NOV) as soon as possible. Be prepared to make your compliance determinations, calculate excess emissions, and issue all necessary violation notices. Be able to document future NOVs which may be pending due to sample results or additional information requests. **All violations should be followed up**, consistent with your district policy, to ensure that the source is brought into compliance.

305 VACUUM SYSTEMS

305.1 INTRODUCTION

Vacuum systems are used primarily to distill heavy crude residues which cannot be distilled at atmospheric pressure. The vacuum is produced by either a series of steam ejectors or a vacuum pump which suck the vapors from the top of the distillation column. The vapors are then condensed to liquid and are drained to an accumulator or hot well. The vapors which cannot be condensed (noncondensables) were, in the past, often vented to the atmosphere and were a considerable source of VOC emissions and odors.

Current regulations require that the noncondensables be vented to a closed system, usually to the sour gas system, to the flare, or to a heater firebox. Also the accumulator or hot well must be covered to prevent emissions from the hot condensate.

According to the EPA's AP-42, Air Pollution Emission Factors, a vacuum distillation column will produce about 50 pounds of noncondensable hydrocarbons for each 1000 barrels of topped crude processed. A 30,000 barrel per day vacuum unit would then produce about 250 tons per year of VOCs. Fortunately, these potential emissions are reduced by 99% or more if properly vented to the sour gas system, to a flare, or to the firebox of a fired heater.

This section is designed to help you, the field inspector, to conduct an inspection of a vacuum distillation unit and assure that the noncondensables are properly vented to a closed system. Our goal is to provide a consistent inspection procedure which will vary only slightly from one facility to the next due to the variations in the type of equipment in use.

After a short description of how a vacuum distillation system works and how it relates to the overall refinery operation, we will address how to assure that the noncondensables from a vacuum system are being properly handled.

Two other sources of pollutants are present within a vacuum unit. These are discussed elsewhere in this manual and will not be covered in this section. The vacuum unit will probably also have a gas-fired heater which was discussed in section 201. Fugitive VOC emissions from the vacuum unit are generally small due to the low pressures and low vapor pressure oils in the process. However, the equipment containing the noncondensables and fuel gas may be sources of fugitive VOC emissions. Fugitive VOC emissions are discussed in section 301.

305.2 PROCESS DESCRIPTION

If petroleum tar is heated to temperatures above about 750 °F, the molecules will tend to crack apart, forming gases and carbon (coke) deposits. Unfortunately, these coke deposits can quickly clog up equipment and so distillation cannot normally be performed at these high temperatures. But there are valuable gas-oils and lube oil stocks, with high boiling temperatures, which can still be separated from the tar and asphalt residues. This is accomplished by performing the distillation at a pressure of less than one atmosphere (in a vacuum) and in the presence of steam. The gas-oils and lube oils can then be boiled off at temperatures closer to 700 °F. The products from a vacuum unit include one or two gas-oil streams and a bottom residual tar and asphalt stream. Figure 305.1 shows a vacuum distillation system.

305.2.1 Vacuum Distillation Column

The vacuum column can be recognized by its shape. It is a column of medium height but with a very large diameter. The large diameter is needed to minimize the pressure drop of the vapors flowing up the column. This allows a vacuum to be achieved at the bottom of the column.

To protect the vessel from collapsing from the vacuum, reinforcing rings are welded around the circumference. Vessels designed to withstand a vacuum can usually be identified by the presence of these rings. The vacuum tower will generally also have several heat exchangers (condensers) located on a support structure near the top of the tower.

As in other distillation columns, vaporized hydrocarbons rise up the vacuum tower and condense on trays as they cool. Relatively lower molecular weight hydrocarbons (gas-oils in this case) that have lower boiling points will condense on higher trays. The separated gas-oils can then be drawn off the trays in the tower. The material still left over at the bottom of the vacuum unit is very heavy, thick, and black, and has a high molecular weight. This material may be used to make asphalt, fuel oil, or may be sent to a coker for thermal cracking.

305.2.2 The Vacuum

The vacuum is achieved by sucking the vapors from the top of the distillation column using either a vacuum pump or a series of steam ejectors and condensers. The vacuum pump is a special type of compressor (usually a liquid ring compres-

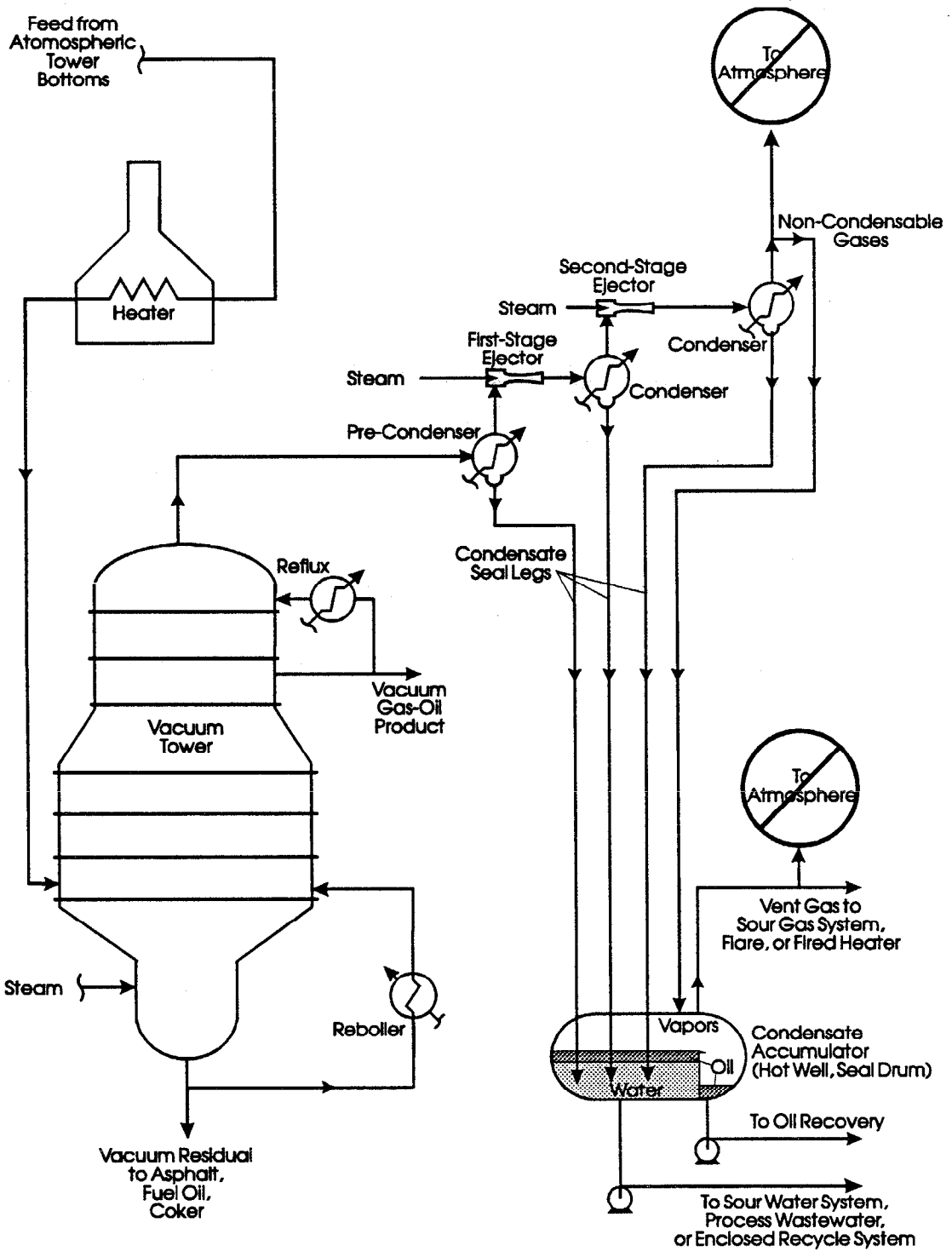

Figure 305.1
Vacuum Distillation Unit

sor) designed to draw a deep vacuum. The steam ejector is a device which uses a nozzle to increase the velocity and momentum of the steam. The high velocity and momentum draw a vacuum in the area beside the nozzle. Vapors from the tower are introduced into this vacuum zone and are carried away by the momentum of the steam jet.

The vapors are first cooled in a condensing heat exchanger called the pre-condenser. This reduces the amount of vapors which must be removed by the first-stage ejector. The vapors and steam from the ejector (or vacuum pump) are then cooled in another condenser. The liquid condensate is drained to an accumulator where the oil and water are separated by gravity. The oil is recycled to the crude unit and the water may be drained to the sour water system, the process wastewater system, or perhaps may be reused as desalter wash water.

305.2.3 Ejectors and Condensers

In order to conserve steam and produce a deeper vacuum, steam ejectors and condensers are usually arranged in a series of two or three stages. Vapors from the vacuum distillation column and precondenser are drawn into the first-stage ejector(s) and are cooled in the first-stage condenser. Vapors from the first-stage condenser are drawn into the second-stage ejector(s) and are recooled in the second-stage condenser. Similarly, a third-stage ejector(s) and condenser are often incorporated. The first-stage ejector(s) and condenser are generally the largest, while the second and third stages decrease in size.

The steam ejectors and condensers are generally located on the support structure up near the top of the vacuum tower. Liquids from the condensers flow by gravity down long vertical pipes called seal legs, to below the liquid level in the condensate accumulator vessel. The liquid level in the seal leg forms a liquid seal which prevents vapors from flowing back to the condenser and maintains a vacuum in the condenser. The noncondensable vapors from the final stage condenser generally also flow to the accumulator before being vented to the sour gas system or to incineration. Historically, these vapors (the vent-gas or tail-gas) were often vented directly to atmosphere. Environmental regulations now prohibit venting to atmosphere.

305.2.4 Condensate Accumulator

In historical practice, the accumulator was called a hot well or seal pot and was a vessel at atmospheric pressure, hopefully fitted with a cover to reduce ground level odors and emissions. The hot well was not a pressure vessel and was sometimes overwhelmed by light vapors during atmospheric crude tower upsets. During these upsets, light oils could be sent to the vacuum tower and excessive vapors could be generated, eventually being released at the hot well. In addition to being a pollution concern, an explosive gas mixture could be generated in an area of operating electrical equipment. Most modern installations use a pressure vessel for the condensate accumulator and many hot wells have been replaced. The terms hot well and seal pot are still frequently used.

These accumulators generally contain water with a light-oil layer on top. Uncovered, the accumulator would be a significant source of VOC emissions. Air quality regulations now require that the condensate accumulator have a close fitting cover.

305.3 RULE DISCUSSION

Most districts have a specific rule which applies to vacuum systems. This rule applies directly to the vacuum distillation unit in a petroleum refinery. Generally, each of the district rules require first that hot wells and accumulators shall be covered. Next, they require that the vapors from the vacuum system shall either be:

1) collected, compressed, treated if necessary, and added to the refinery gas system;
2) controlled and combusted in an appropriate firebox or incinerator; or
3) controlled by an equivalent method approved by the APCO.

In addition, the SCAQMD also requires that vapors which contain more than 800 ppm sulfur compounds, expressed as H_2S, must be treated to remove sulfur. Table 305.1 lists those regulations which apply specifically to vacuum systems.

Much of the vacuum distillation unit is kept under a vacuum and, consequently, will be exempt from the fugitive VOC emission regulations affecting valves, pumps, etc. Areas where fugitive VOC emissions might occur include the heater

305 VACUUM SYSTEMS

Table 305.1
District Regulations Affecting Vacuum Systems

District	Regulation	Limit
BAAQMD	8-9-301.1	VOC vapors from vacuum systems must be controlled, and incinerated or added to refinery gas system, or equivalent.
BAAQMD	8-9-301.2	Hot wells and/or accumulators must be covered and vapors must be contained.
SCAQMD	465(c)(1)	Hot wells and/or accumulators must be covered.
SCAQMD	465(c)(2)	Exhaust gases from vacuum systems shall not contain sulfur compounds in excess of 800 ppm, expressed as H2S.
SCAQMD	465(c)(3)	VOC vapors from vacuum systems must be reduced by at least 90%.
SCAQMD	431.1 (b)(1)(C)	A person shall not burn or discharge to any fuel system or vent gas disposal system, gaseous fuel containing sulfur compounds in excess of 800 ppm as H2S.
SJVUAPCD	4453-3.1	Hot wells and/or accumulators must be covered.
SJVUAPCD	4453-3.2	VOC vapors from vacuum systems must be controlled, and incinerated or added to refinery gas system, or equivalent.

fuel gas system and the noncondensable vapor system, after the final condenser. Due to the low pressures and heavy oils being processed, the vacuum unit would be near the bottom of a fugitive VOC priority list. Fugitive emissions are discussed in section 301.

The vacuum distillation unit will have at least one fired heater and the regulations discussed in section 201 will apply. Because these topics have been discussed elsewhere in this manual, Table 305.1 does not include the regulations which apply to fugitive emissions, gas-fired heaters, or public nuisance.

As with other refinery facilities, public nuisance rules will apply when the source is a vacuum system. The noncondensables have a foul mercaptan smell. Significant odors are likely to indicate that the noncondensable vent gases are not being properly contained, according to the rules in Table 305.1.

305.4 INSPECTION PROCEDURES

An air quality inspector may be able, in most cases, to assure that the vent-gas system is being properly handled in about an hour or so. Consequently, it is assumed that the vacuum distillation unit will be included as a part of some larger inspection, probably that of a nearby crude unit. And so this section has been shortened to include only those items that relate directly to the vent gas system. The procedures for file review, regulation review, equipment check, pre-entry and entry, inspection meetings, etc., should still be performed although they are not repeated here.

305.4.1 Pre-Inspection

Short summaries of the district regulations for vacuum systems are included in Table 305.1. Please review your district's regulations and do not assume that the tables included here are up to date or complete. These tables are included for guidance and comparison and are not intended to be an authoritative list of applicable regulations. Discuss the regulation with experienced personnel and review any policies your district may have. Make sure that you receive consistent interpretations on how to apply the requirements of the rule.

Examine the Permit to Operate for specific equipment requirements. The vacuum unit Permit should specify the facility's chosen method for handling the vent gas. If the vent-gas is being incinerated in the firebox of a heater, this provision likely must be included in the Permit for that heater.

Make sure that you have the following equipment available for use during the inspection: vision protection, hearing protection, safety shoes, hard hat, gloves, fire retarding clothing (e.g. Nomex), identification, business cards, pens, wipes, hydrogen sulfide detector ampoules, and a portable analyzer for hydrocarbons.

305.4.2 Facility Inspection Procedures

The goals of the vacuum system inspection will be to:

1) verify that the noncondensable vapors <u>are not</u> being vented to atmosphere;
2) verify that the noncondensable vapors <u>are</u> being properly vented to either:
    a) the sour gas system,
    b) the flare,
    c) a heater firebox, or
    d) an equivalent treatment system;
3) verify that the condensate accumulator vessel is covered;
4) verify that all Permit conditions are met; and
5) if a sulfur content limit applies, verify that either:
    a) the vapors are being sent to the sour gas treatment system,
    b) the sulfur level is within the limit, or
    c) another acceptable sulfur control method is used.

Examine the Noncondensable Vapor Path

In most cases, it is necessary to climb to the top of the structure supporting the condensers in order to inspect the noncondensable path. Follow the vapor piping from the top of the vacuum tower to the precondenser and out the top, to the first-stage ejector, condenser, second-stage ejector, condenser, and third-stage if present. After the final condenser, the vapor should be routed down from the structure, probably to the condensate accumulator. Note the location of this vapor line. Scan the top of the structure for small vent stacks and if any are present, determine the source. The condensate lines (seal legs) will drain from the bottom of each condenser toward the bottom of the structure. Note the location of these lines.

When you are convinced that the vapors are not being vented to atmosphere from the top of the structure, proceed downstairs, following the vapor line as best you can. If the vapors are routed through the condensate accumulator, the vapor outlet line should continue from the top of the accumulator to the appropriate treatment system. The vapors may flow directly to the treatment system. A compressor may also be installed to pump the vapors.

Continue to follow the vapor line until it reaches one of the acceptable treatment alternatives. The vapor line may tie in to a refinery gas manifold which might be labeled as refinery gas, sour gas, fuel gas, etc. It may be routed to a nearby heater firebox, where it should enter somewhere near the burners. It may also be routed to the blowdown / flare system header. The regulations also allow for an alternative treatment system which would be described in the Permit to Operate.

The noncondensable vapors may contain significant amounts of sulfur compounds (mercaptans and hydrogen sulfide). At least one air district, the South Coast AQMD, prohibits sending gases with more than 800 ppm sulfur (as H_2S) to a fuel-gas system or to a combustion device. This would probably require that the vacuum system noncondensables be treated to remove sulfur, probably by the refinery sour fuel-gas scrubbing system. In this case, it is not allowable to send the noncondensables directly to a flare or firebox, if the sulfur level is above 800 ppm.

Condensate Accumulator Cover

The condensate lines should drain into this vessel. Most modern accumulators in this service will be of the cylindrical pressure-vessel type. Other types must be fitted with a close fitting cover. Each district should have a policy concerning how tight the cover must fit. The accumulator resembles an upstream part of the wastewater treatment system (refer to section 303) and similar standards for covers may apply.

Confirm that the water and oil streams from the accumulator drain (or are pumped) into enclosed systems.

Check the Permit to Operate

Check the Permits to Operate for each permitted item and make sure the equipment runs in accordance with permit conditions and district regulations. Permits must be posted and they must be current. When you inspect the equipment, see

that it is consistent with the list of equipment in the Permit to Operate and that it has not been altered since the last Permit was issued.

305.4.3 POST-INSPECTION PROCEDURES

The facility should be informed of the results of the inspection, advised of areas of concern where additional information or investigation is needed, or given a Notice of Violation (NOV) as soon as possible. Be prepared to make your compliance determinations, and issue any necessary violation notices. Be able to document future NOVs which may be pending due to sample results or additional information requests. **All violations should be followed up**, consistent with your district policy, to ensure that the source is brought into compliance.

APPENDIX A
DISTRICT REGULATIONS

Please Keep Up-to-date Copies of Your District's Petroleum Refining Related Regulations Here

EPA METHOD 21

Determination of Volatile Organic Compound Leaks

1. *Applicability and Principle*

1.1 Applicability. This method applies to the determination of volatile organic compound (VOC) leaks from process equipment. These sources include, but are not limited to, valves, flanges and other connections, pumps and compressors, pressure relief devices, process drains, open-ended valves, pump and compressor seal system degassing vents, accumulator vessel vents, agitator seals, and access door seals.

1.2 Principle. A portable instrument is used to detect VOC leaks from individual sources. The instrument detector type is not specified, but it must meet the specifications and performance criteria contained in Section 3. A leak definition concentration based on a reference compound is specified in each applicable regulation. This procedure is intended to locate and classify leaks only, and is not to be used as a direct measure of mass emission rates from individual sources.

2. *Definitions*

2.1 Leak Definition Concentration. The local VOC concentration at the surface of a leak source that indicates that a VOC emission (leak) is present. The leak definition is an instrument meter reading based on a reference compound.

2.2 Reference Compound. The VOC species selected as an instrument calibration basis for specification of the leak definition concentration. (For example: If a leak definition concentration is 10,000 ppmv as methane, then any source emission that results in a local concentration that yields a meter reading of

10,000 on an instrument calibrated with methane would be classified as a leak. In this example, the leak definition is 10,000 ppmv, and the reference compound is methane.)

2.3 Calibration Gas. The VOC compound used to adjust the instrument meter reading to a known value. The calibration gas is usually the reference compound at a concentration approximately equal to the leak definition concentration.

2.4 No Detectable Emission. Any VOC concentration at a potential leak source (adjusted for local VOC ambient concentration) that is less than a value corresponding to the instrument readability specification of section 3.1.1(c) indicates that a leak is not present.

2.5 Response Factor. The ratio of the known concentration of a VOC compound to the observed meter reading when measured using an instrument calibrated with the reference compound specified in the application regulation.

2.6 Calibration Precision. The degree of agreement between measurements of the same known value, expressed as the relative percentage of the average difference between the meter readings and the known concentration to the known concentration.

2.7 Response Time. The time interval from a step change in VOC concentration at the input of the sampling system to the time at which 90 percent of the corresponding final value is reached as displayed on the instrument readout meter.

3. *Apparatus*

3.1 Monitoring Instrument.

3.1.1 Specifications.

a. The VOC instrument detector shall respond to the compounds being processed. Detector types which may meet this requirement include, but are not limited to, catalytic oxidation, flame ionization, infrared absorption, and photoionization.

b. Both the linear response range and the measurable range of the instrument for each of the VOC to be measured, and for the VOC calibration gas that is used for calibration, shall encompass the leak definition concentration specified in the regulation. A dilution probe assembly may be used to bring the VOC concentration within both ranges; however, the specifications for instrument response time and sample probe diameter shall still be met.

c. The scale of the instrument meter shall be readable to ±2.5 percent of the specified leak definition concentration when performing a no-detectable-emission survey.

d. The instrument shall be equipped with an electrically driven pump to insure that a sample is provided to the detector at a constant flow rate. The nominal sample flow rate, as measured at the sample probe tip, shall be 0.10 to 3.0 liters per minute when the probe is fitted with a glass wool plug or filter that may be used to prevent plugging of the instrument.

e. The instrument shall be intrinsically safe as defined by the applicable U.S.A. standards (e.g., National Electric Code by the National Fire Prevention Association) for operation in any explosive atmospheres that may be encountered in its use. The instrument shall, at a minimum, be intrinsically safe for Class 1, Division 1 conditions, and Class 2, Division 1conditions, as defined by the example Code. The instrument shall not be operated with any safety device, such as an exhaust flame arrestor, removed.

f. The instrument shall be equipped with a probe or probe extension for sampling not to exceed 1/4 in. in outside diameter, with a single end opening for admission of sample.

3.1.2 Performance Criteria.

(a) The instrument response factors for each of the VOC to be measured shall be less than 10. When no instrument is available that meets this specification when calibrated with the reference VOC specified in the applicable regulation, the available instrument may be calibrated with one of the VOC to be measured, or any other VOC, so long as the instrument then has a response factor of less than 10 for each of the VOC to be measured.

(b) The instrument response time shall be equal to or less than 30 seconds. The instrument pump, dilution probe (if any), sample probe, and probe filter, that will be used during testing, shall all be in place during the response time determination.

c. The calibration precision must be equal to or less than 10 percent of the calibration gas value.

d. The evaluation procedure for each parameter is given in Section 4.4.

3.1.3 Performance Evaluation Requirements.

a. A response factor must be determined for each compound that is to be measured, either by testing or from reference sources. The response factor tests are required before placing the analyzer into service, but do not have to be repeated at subsequent intervals.

b. The calibration precision test must be completed prior to placing the analyzer into service, and at subsequent 3-month intervals or at the next use whichever is later.

c. The response time test is required prior to placing the instrument into service. If a modification to the sample pumping system or flow configuration is made that would change the response time, a new test is required prior to further use.

3.2 Calibration Gases. The monitoring instrument is calibrated in terms of parts per million by volume (ppmv) of the reference compound specified in the applicable regulation. The calibration gases required for monitoring and instrument performance evaluation are a zero gas (air, less than 10 ppmv VOC) and a calibration gas in air mixture approximately equal to the leak definition specified in the regulation. If cylinder calibration gas mixtures are used, they must be analyzed and certified by the manufacturer to be within ±2 percent accuracy, and a shelf life must be specified. Cylinder standards must be either reanalyzed or replaced at the end of the specified shelf life. Alternately, calibration gases may be prepared by the user according to any accepted gaseous standards preparation procedure that will yield a mixture accurate to within ±2 percent. Prepared standards must be replaced each day of use unless it can be demonstrated that degradation does not occur during storage. Calibrations may be performed using

a compound other than the reference compound if a conversion factor is determined for that alternative compound so that the resulting meter readings during source surveys can be converted to reference compound results.

4. *Procedures*

4.1 Pretest Preparations. Perform the instrument evaluation procedures given in Section 4.4 if the evaluation requirements of Section 3.1.3 have not been met.

4.2 Calibration Procedures. Assemble and start up the VOC analyzer according to the manufacturer's instructions. After the appropriate warmup period and zero internal calibration procedure, introduce the calibration gas into the instrument sample probe. Adjust the instrument meter readout to correspond to the calibration gas value.

Note: If the meter readout cannot be adjusted to the proper value, a malfunction of the analyzer is indicated and corrective actions are necessary before use.

4.3 Individual Source Surveys.

4.3.1 Type I-Leak Definition Based on Concentration. Place the probe inlet at the surface of the component interface where leakage could occur. Move the probe along the interface periphery while observing the instrument readout. If an increased meter reading is observed, slowly sample the interface where leakage is indicated until the maximum meter reading is obtained. Leave the probe inlet at this maximum reading location for approximately two times the instrument response time. If the maximum observed meter reading is greater than the leak definition in the applicable regulation, record and report the results as specified in the regulation reporting requirements. Examples of the application of this general technique to specific equipment types are:

a. Valves - The most common source of leaks from valves is at the seal between the stem and housing. Place the probe at the interface where the stem exits the packing gland and sample the stem circumference. Also, place the probe at the

interface of the packing gland take-up flange seat and sample the periphery. In addition, survey valve housings of multipart assembly at the surface of all interfaces where a leak could occur.

b. Flanges and Other Connections - For welded flanges, place the probe at the outer edge of the flange-gasket interface and sample the circumference of the flange. Sample other types of nonpermanent joints (such as threaded connections) with a similar traverse.

c. Pumps and Compressors - Conduct a circumferential traverse at the outer surface of the pump or compressor shaft and seal interface. If the source is a rotating shaft, position the probe inlet within 1 cm of the shaft-seal interface for the survey. If the housing configuration prevents a complete traverse of the shaft periphery, sample all accessible portions. Sample all other joints on the pump or compressor housing where leakage could occur.

d. Pressure Relief Devices - The configuration of most pressure relief devices prevents sampling at the sealing seat interface. For those devices equipped with an enclosed extension, or horn, place the probe inlet at approximately the center of the exhaust area to the atmosphere.

e. Process Drains - For open drains, place the probe inlet at approximately the center of the area open to the atmosphere. For covered drains, place the probe at the surface of the cover interface and conduct a peripheral traverse.

f. Open-Ended Lines or Valves - Place the probe inlet at approximately the center of the opening to the atmosphere.

g. Seal System Degassing Vents and Accumulator Vents - Place the probe inlet at approximately the center of the opening to the atmosphere.

h. Access Door Seals - Place the probe inlet at the surface of the door seal interface and conduct a peripheral traverse.

4.3.2 Type II - "No Detectable Emission".

Determine the local ambient concentration around the source by moving the probe inlet randomly upwind and downwind at a distance of one to two meters from the source. If an interference exists with this determination due to a nearby

emission or leak, the local ambient concentration may be determined at distances closer to the source, but in no case shall the distance be less than 25 centimeters. Then move the probe inlet to the surface of the source and determine the concentration described in 4.3.1. The difference between these concentrations determines whether there are no detectable emissions. Record and report the results as specified by the regulation. For those cases where the regulation requires a specific device installation, or that specified vents be ducted or piped to a control device, the existence of these conditions shall be visually confirmed. When the regulation also requires that no detectable emissions exist, visual observations and sampling surveys are required. Examples of this technique are:

(a) Pump or Compressor Seals - If applicable, determine the type of shaft seal. Preform a survey of the local area ambient VOC concentration and determine if detectable emissions exist as described above.

(b) Seal System Degassing Vents, Accumulator Vessel Vents, Pressure Relief Devices - If applicable, observe whether or not the applicable ducting or piping exists. Also, determine if any sources exist in the ducting or piping where emissions could occur prior to the control device. If the required ducting or piping exists and there are no sources where the emissions could be vented to the atmosphere prior to the control device, then it is presumed that no detectable emissions are present. If there are sources in the ducting or piping where emissions could be vented or sources where leaks could occur, the sampling surveys described in this paragraph shall be used to determine if detectable emissions exist.

4.3.3 Alternative Screening Procedure. A screening procedure based on the formation of bubbles in a soap solution that is sprayed on a potential leak source may be used for those sources that do not have continuously moving parts, that do not have surface temperatures greater than the boiling point or less than the freezing point of the soap solution, that do not have open areas to the atmosphere that the soap solution cannot bridge, or that do not exhibit evidence of liquid leakage. Sources that have these conditions present must be surveyed using the instrument techniques of 4.3.1 or 4.3.2.

Spray a soap solution over all potential leak sources. The soap solution may be a commercially available leak detection solution or may be prepared using concentrated detergent and water. A pressure sprayer or a squeeze bottle may be used to dispense the solution. Observe the potential leak sites to determine if any

bubbles are formed. If no bubbles are observed, the source is presumed to have no detectable emissions or leaks as applicable. If any bubbles are observed, the instrument techniques of 4.3.1 or 4.3.2 shall be used to determine if a leak exists, or if the source has detectable emissions, as applicable.

4.4 Instrument Evaluation Procedures. At the beginning of the instrument performance evaluation test, assemble and start up the instrument according to the manufacturer's instructions for recommended warmup period and preliminary adjustments.

4.4.1 Response Factor. Calibrate the instrument with the reference compound as specified in the applicable regulation. For each organic species that is to be measured during individual source surveys, obtain or prepare a known standard in air at a concentration of approximately 80 percent of the applicable leak definition unless limited by volatility or explosivity. In these cases, prepare a standard at 90 percent of the saturation concentration, or 70 percent of the lower explosive limit, respectively. Introduce this mixture to the analyzer and record the observed meter reading. Introduce zero air until a stable reading is obtained. Make a total of three measurements by alternating between the known mixture and zero air. Calculate the response factor for each repetition and the average response factor.

Alternatively, if response factors have been published for the compounds of interest for the instrument or detector type, the response factor determination is not required, and existing results may be referenced. Examples of published response factors for flame ionization and catalytic oxidation detectors are included in Bibliography.

4.4.2 Calibration Precision. Make a total of three measurements by alternately using zero gas and the specified calibration gas. Record the meter readings. Calculate the average algebraic difference between the meter readings and the known value. Divide this average difference by the known calibration value and multiply by 100 to express the resulting calibration precision as a percentage.

4.4.3 Response Time. Introduce zero gas into the instrument sample probe. When the meter reading has stabilized, switch quickly to the specified calibration gas. Measure the time from switching to when 90 percent of the final stable reading is attained. Perform this test sequence three times and record the results. Calculate the average response time.

5. *Bibliography*

1. DuBose, D.A., and G.E. Harris. Response Factors of VOC Analyzers at a Meter Reading of 10,000 ppmv for Selected Organic Compounds. U.S. Environmental Protection Agency, Research Triangle Park, NC. Publication No. EPA 600/2-81-051. September 1981.

2. Brown, G.E., et al. Response Factors of VOC Analyzers Calibrated with Methane for Selected Organic Compounds. U.S. Environmental Protection Agency, Research Triangle Park, NC. Publication No. EPA 600/2-81-022. May 1981.

3. DuBose, D.A., et al. Response of Portable VOC Analyzers to Chemical Mixtures. U.S. Environmental Protection Agency, Research Triangle Park, NC. Publication No. EPA 600/2-81-110. September 1981.

APPENDIX C
REFERENCES

1. Environmental Protection Agency. 1980. Petroleum Refinery Enforcement Manual. Arlington, Texas: PEDCo Environmental, Inc.

2. Danielson, John A., ed. 1973. Air Pollution Engineering Manual (AP-40). Washington, D.C.: U.S. Printing Office.

3. Treating Oil Field Emulsions. 1974 Dallas, Texas and Austin, Texas: American Petroleum Institute Division of Production and Petroleum Extension Service respectively.

4. Lindeburg, Michael. 1990. Mechanical Engineering Reference Manual. Eighth Edition. Belmont, CA: Professional Publications, Inc.

5. Sherwood, David R. and Whistance, Dennis J. 1980. The Piping Guide. San Francisco, California: Syentek Books Company.

6. Sittig, Marshall. 1978. Petroleum Refining Industry Energy Saving and Environmental Control. Park Ridge, New Jersey: Noyes Data Corporation.

7. Lieberman, Norman P. 1981. Troubleshooting Refinery Processes. Tulsa, Oklahoma: PennWell Publishing Company.

8. Leffler, William L. 1979. Petroleum Refining for the Non-Technical Person. Tulsa, Oklahoma: PennWell Publishing Company.

9. Environmental Protection Agency. 1978. Control of Volatile Emissions from Petroleum Liquid Storage in External Floating Roof Tanks. EPA - 450/2-78-047.

10. Langenkamp, R. D. 1981. Handbook of Oil Industry Terms and Phrases. Third Edition. Tulsa, Oklahoma: PennWell Publishing Company.

11. Langenkamp, R. D. 1980. The Illustrated Petroleum Reference Dictionary. Tulsa, Oklahoma: The Petroleum Publishing Company.

APPENDIX C
REFERENCES

12. Schumacher, M. M., ed. 1978. Enhanced Oil Recovery Secondary and Tertiary Methods. Park Ridge, New Jersey: Noyes Data Corporation.

13. Lieberman, Norman P. 1983. Process Design for Reliable Operations. Houston, Texas: Gulf Publishing Company.

14. Reed, Robert D. 1976. Furnace Operations. Second Edition. Houston, Texas: Gulf Publishing Company.

15. Evans, Frank L., Jr. 1971. Equipment Design Handbook for Refineries and Chemical Plants. 2 vols. Houston, Texas: Gulf Publishing Company.

16. Perry, Robert H. and Chilton, Cecil H. 1973. Chemical Engineers' Handbook. Fifth Edition. United States of America: McGraw-Hill Book Company.

GLOSSARY

Accumulator - A small vessel used to hold a gas or liquid under pressure for use in a hydraulic or air-actuated system. Accumulators store fluids until they are required for processes in a plant.

Aerated Lagoon - A pond used to remove minute amounts of oil remaining in wastewater. They are equipped with aeration equipment to keep organisms growing in the water. The organisms break down oil to carbon dioxide and water. Wastewater is kept in the lagoon for three to ten days.

Alkylation - A process used to produce high quality gasoline blending components (alkylates) from isobutane and butylenes. During the process, light hydrocarbons of lower value are combined to make heavier, high octane, hydrocarbons suitable for gasoline.

Amine - Organic chemicals used to absorb hydrogen sulfide (H_2S). Monoethanolamine (MEA) and diethanolamine (DEA) are common amines.[10]

Amine Unit - A treatment unit used to remove contaminants such as H_2S (hydrogen sulfide), and CO_2 (carbon dioxide).[10]

API - American Petroleum Institute.

API Gravity - A method of expressing the density (mass per unit volume) of oil. It is related to specific gravity. The API gravity system is more convenient to work with since oil specific gravities are fractions or decimals.[10] (Also see specific gravity)

API Separator - A common gravity separation device used by refineries to remove oil and solids from wastewater. Inside an API separator, oil, which tends to float on top of the water, is removed by skimmers scraping the top of the water. Solids, which tend to sink to the bottom, are removed by scrapers moving along the bottom of the separator.

Aromatic - A hydrocarbon molecule in the form of a six carbon "ring" structure. The rings of aromatics act like alternating single and double bonded carbon atoms. These compounds were so named because of their sickly-sweet smell. Benzene is a common aromatic compound.

GLOSSARY

Asphalt (asphaltelene $C_{57}H_{32}$ et. al.) - A heavy, thick hydrocarbon refined from crude oil that is usually solid at room temperature. It is often used for roofing and road construction. Asphalt may also be called **tar**.

Atmospheric Distillation Column - A tall, cylindrical tower at a refinery used to distill crude oil. The inside of the tower is near atmospheric pressure and has trays inside it. Crude oil is heated to vaporization before it enters the column and as the vapors rise up the tower, separate fractions of the crude condense on each tray. As vapors rise in the tower, they cool, causing hydrocarbons with lower boiling points to condense. Very light gases such as methane and ethane will not condense. Methane and ethane will usually be routed from the top of the tower to the gas plant.

Background Concentration - A reading expressed as methane on a portable hydrocarbon detection instrument which is taken at least three meters upwind from any components to be inspected and not influenced by emissions from any other specific place.

BACT - "Best Available Control Technology" - an emission limitation based on the maximum degree of emission reduction which (considering energy, environmental, and economic impacts and other costs) is achievable through application of production processes and available methods, systems, and techniques. In no event does BACT permit emissions in excess of those allowed under any applicable NSPS or NESHAP. It is applicable on a case-by-case basis for each major new (or modified) emission source to be located in areas not attaining the National Ambient Air Quality Standards. It applies to each pollutant regulated under the Federal Clean Air Act, and is concerned with Prevention of Significant Deterioration (PSD). See Sections 165(a) (4) and 169 of the Federal Clean Air Act.

Ball Valve - A valve with a ball-shaped disk with a port bored completely through the ball. Ball valves are a "fast opening" type of valve, require a small amount of torque to be actuated, and open or close by a quarter turn of the handle.

Barrel - A measurement of crude oil volume. 1 barrel = 42 U.S. gallons.

Beavon Stretford Process - A process used to clean up tail gas from a sulfur recovery unit. Tail gas is mixed with reducing gases and fed into a catalytic reactor to reduce sulfur compounds to hydrogen sulfide (H_2S). Then the process

uses the Stretford solution (an aqueous solution of sodium metavanadate, $NaVO_3$) to change hydrogen sulfide to elemental sulfur particles.

Bioreactors - See Biotreater.

Biotreater - A tank or pond used to break down petroleum in water by the use of organisms such as algae, bacteria, or protozoans. The water is aerated by machinery to help the organisms grow. Organisms break down petroleum mostly to carbon dioxide and water.

Biox cell - Short for "biological oxidation" cell. See Biotreater.

Blind Flange - A disc bolted on the end of a pipe to seal off the end.

Blowdown - The venting of a pressure vessel or pipe into another vessel or the atmosphere.[10]

Blowdown System - A piping system designed to handle emergency releases from refinery processes units.

Body - The portion of a valve that contains the disk of a valve and the substance flowing through a valve.

Boiler - A heater designated for the production of steam.

Bonnet - Generally the upper portion of a valve which supports the valve stem.

Bromine Number - A term that refers to a test that measures the degree of unsaturation in gasoline. The bromine number is an indication of the olefin content of gasoline and of the tendency of vapors to react to form ozone.

B S & W - An abbreviation for Bottom Sediment and Water. Water and sediment often found with crude oil.

Bubble Tower - Tall cylindrical towers found in a refinery. See Fractionator.

Bugs - A term given for the bacteria, protozoans and other living organisms that help break down the petroleum in wastewater.

GLOSSARY

Bulk Plant - A facility used to distribute petroleum products. Bulk plants are usually equipped with loading racks and have tank batteries for petroleum storage.

Bullet Tanks - A term for horizontal, cylindrical pressure tanks made in the shape of a fat bullet. These tanks are often used to store butane or propane under pressure.

Bull Plug - A short tapered pipe fitting used to plug the end of an open pipe or the throat on a valve.[11]

Butane (C_4H_{10}) - A "light" hydrocarbon fraction. It is normally gaseous at atmospheric pressure, but it is very easy to liquefy. It is the lightest gasoline range hydrocarbon.

Butterfly Valve - A valve that uses a round, flat disk that pivots on a shaft to regulate flow.

Carbon Dioxide (CO_2) - A product of combustion and wastewater bio-treatment units. Carbon dioxide is not considered to be a pollutant, but it is a greenhouse gas.

Carbon Monoxide (CO) - A combustion product formed from incomplete combustion. It is a pollutant that forms when there is not enough oxygen or too much fuel in a combustion process. When inhaled CO attaches more easily to hemoglobin than oxygen, reducing the amount of oxygen reaching the body's cells.

Catalyst - A substance which promotes a chemical reaction without undergoing a chemical change itself.

Catalytic Cracking - A process used to convert heavy gas oil to lighter, more valuable components that can be used to make gasoline or kerosene. The process involves heating heavy gas oil and charging it with a catalyst into a reaction vessel where hydrocarbon molecules break or "crack" into smaller ones. (Also see Fluid Catalytic Cracking)

Catalytic Reforming - A process used to convert gasoline range hydrocarbons to a higher octane number, making stocks more suitable for gasoline blending.

Centipoise - A unit of viscosity equal to 0.01 poise. One poise equals one dyne-second per square centimeter. Water at 20 °C has a viscosity of 1.005 centipoise.[11] (see Viscosity)

Centrifugal Pump - A pump that uses the kinetic energy of a rotating impeller to impart energy to a fluid. Electric motors are often used to drive the impeller. Centrifugal pumps may operate at high speeds and can handle large volumes of fluids.[11]

Chart Recorder - A device that continuously prints parameters of operating equipment such as NOx, CO, or hydrocarbon emission rates; temperatures; or pressures.

Clarifier Tank - A tank in the wastewater treatment system used to remove organisms from the wastewater after it passes through the biotreater. A skimmer is used to remove dead organisms from the surface of the water. These tanks do not need to be covered since only an extremely small amount of oil may be left in the water.

Claus Process - A process used to convert hydrogen sulfide (H_2S) rich gases to elemental sulfur (S). During the process one third of the hydrogen sulfide feed is burned to form sulfur dioxide (SO_2). The hydrogen sulfide and sulfur dioxide are input into a reactor where they form water (H_2O) and sulfur (S).

Clean Out Plate - A circular plate bolted to a tank used to allow workers access to a tank for cleaning.

Closure Criteria - The regulations pertaining to the minimum gaps allowed in equipment in order to prevent the emission of volatile hydrocarbons. The regulations primarily apply to storage tank roofs and separator roofs.

CO Boiler - A heater used to control carbon monoxide (CO) from regenerator flue gas from a catalytic cracker. Fuel gas is added to the regenerator flue gas to create a combustible mixture. Carbon monoxide molecules in the flue gas are converted to carbon dioxide (CO_2) during the combustion process. Modern catalytic crackers produce very little CO and the CO boiler is often used as a waste heat boiler.

Cogeneration - The generation of two types of power while burning a fuel. Most commonly, steam and electricity are produced.

GLOSSARY

Coking - A severe form of thermal cracking. In the process residue (heavy, tar-like oil) is heated to 1000°F and charged to the bottom of a coke drum. Some hydrocarbons crack and are sent to a fractionator, but heavier hydrocarbons left in the drum crack into coke. Coke is a black, coal-like substance.[8]

Component - A device that is any of the following: valves, flanges, threaded connections, hatches, seals, packing, sight glasses, meters, pumps, compressors, pressure relief valves. The term is used here to describe a possible source of fugitive VOC emissions.

Compressor - A machine driven by steam, electric motors or internal combustion engines used to compress or transport a gas from one location to another.

Continuous Emission Monitor (CEM) - An instrument that continuously measures emissions. Hydrogen sulfide, sulfur dioxide and nitrogen oxides are pollutants often measured from stacks by continuous emission monitors.

Control Technology Guidelines (CTG) - A series of documents prepared by EPA to assist states in defining reasonable available control technology (RACT) for major sources of volatile organic compounds (VOC). The documents provide information on the economic and technological feasibility of available techniques and, in some cases, suggest limits on VOC emissions.

Cooling Tower - A large louvered structure, through which water flows to cool and aerate the water. Although most cooling towers are rectangular in shape, some are cylindrical.[10] As water flows down over the louvers, air is pulled upward. Some of the water evaporates and a water vapor plume may be visible emanating from the stack. The water is cooled by evaporation.

CPI (Corrugated Plate Interceptor) Separator - A gravity separation device used to remove petroleum from wastewater. Wastewater is forced through parallel plates in the CPI where oil globules collect. Large globules float to the surface and are removed by skimmers.

Crude Oil - Oil as it comes from an oil well; unrefined petroleum. A mixture of hydrocarbons that exists in the liquid phase in natural underground reservoirs and remains in the liquid phase when brought to ambient conditions.[10]

Cumulative Gap - A gap limit in air pollution regulations where the total length of all gaps around the perimeter of a device, usually the roof of a separator or a floating roof tank, is measured. The length, width, or area of the gap may be used to determine compliance with regulations.

Cycle Oil - Petroleum from the bottom of the fractionator of the catalytic cracker. Cycle oil is recycled back with the feed to the reactor of catalytic cracker.

Cyclone - A control device used to remove particulates from a gas stream. A cyclone is cylindrically shaped and narrows toward the bottom. As a gas tangentially enters a cyclone it rotates rapidly in a cyclonic action, forcing particulates out toward the wall of the device. Particulates hit the wall and slide down to the bottom of the device and the cleaned gas exits from the center of the cyclone at the top.

Degassing - A process used to remove volatile vapors from a vessel after it has been emptied. A gas such as nitrogen may be pumped into the tank to sweep out vapors to a control device or heaters. Degassing makes the atmosphere inside a tank safer for workers to enter.

Density - Measure of mass per unit of volume, i.e. grams per liter and pounds mass or slugs per gallon.

Desalter - A unit used to remove salts and impurities from crude oil by mixing heated oil with water. The oil and water are allowed to separate in large vessels called desalter tanks. Desalters are a major source of wastewater in a refinery.

Diaphragm - A flexible part made of metal, rubber or plastic that is usually round in shape. Diaphragms are often used in valves, pumps and other equipment. A diaphragm can be a source of emissions.

Diesel Fuel - A product of crude oil made from light gas-oil range refined petroleum products.[10]

Disk - The part of a valve that permits or restricts the flow through it.

Dissolved Air Flotation (DAF) - A process used to remove petroleum from wastewater flowing from gravity separators. During the process wastewater is saturated with air and released into a chamber at a lower pressure. Bubbles form

in the liquid and cause oil and particles to move to the surface, forming a layer of froth. The froth can then be removed from the surface of the wastewater by skimmers.

Dissolved Nitrogen Flotation (DNF) - A process used to remove petroleum from wastewater flowing from gravity separators. In the DNF wastewater is saturated with nitrogen forming bubbles in the water that carry oil globules to the surface. A layer of froth containing contaminants forms on the surface of the water which can be removed by skimmers. DNFs are similar to DAFs and are often used when a vapor recovery system is installed.

Distillate - Liquid hydrocarbons that usually have a water-white or pale straw color and an API gravity above 60°.[11]

Distillation - The process of separating crude oil into its separate components by heating it and then cooling and condensing the different fractions.[10] The different components separate because the components have very different boiling points. Light, volatile hydrocarbons such as naphtha and straight run gasoline have low boiling points, but components such as tar and asphalt have high boiling points.

Driver - A machine used to power a pump, compressor or similar device. Electric motors and internal combustion engines are common drivers.

Effluent - A discharge or outflow from a manufacturing or processing plant; outfall; drainage.[11]

Emergency Roof Drain - A device used to remove rainwater from the roof of a floating roof tank when the drain valve has been accidentally left closed. The emergency roof drain prevents the roof from sinking into the contents. It generally consists of a short pipe with a slotted cover mounted through the roof. If enough water accumulates on the roof, it will flow over the pipe, through the slots and down into the tank contents.

Electrostatic Precipitator (ESP) - A large control device used to remove particulates from a gas stream by charging particulates with a direct current corona as they come near negatively charged wires in the device. The particulates then collect on positively charged plates. ESPs may be used to control particulates from catalytic cracking.

Emulsion - A mixture of oil and water in which various methods must be employed in order to remove the water from the oil. An oil and water mixture that won't separate by settling.

Ethane (C_2H_6) - A saturated hydrocarbon that is gaseous at atmospheric conditions. Ethane is a "light end" product of some refinery operations. It is used with methane as refinery fuel gas for heaters.

Explosive Limits - Range of vapor concentrations that will burn in air. A flame will not be sustained at a vapor concentration below the lower explosive limit (LEL) or above the upper explosive limit (UEL).

Feed - Crude oil or their hydrocarbons that are the basic materials for a refining or manufacturing process.[11]

Feedstock - Same as Feed above.[11]

Fill Line - A pipeline used to fill a storage tank or other vessel.

Firebox - The section of a heater closest to the flame where radiation is the major mode of heat transfer. This section is also known as the **furnace** or **radiant section**.

Flange - A type of pipe coupling made in two halves. Each half is screwed or welded to a length of pipe and the two halves are then bolted together, joining the two lengths of pipe.[10]

Flare - A control device used to burn waste gases. They may also be used with vapor recovery systems, on loading racks, or tank batteries.

Floating Roof Tank - A storage tank with a roof that floats on top of the contents stored inside.

Floculants or Flocs - Chemicals such as alum, ferric chloride, and polyelectrolytes that are added to wastewater to improve the separation of contaminants and/or affect the growth of organisms in the water.

Flow Check Valve - A valve that allows flow in only one direction.

GLOSSARY

Flue Gas Recirculation (FGR) - A method used to reduce NOx from heaters. In FGR some exhaust gases are injected with the inlet air stream. This lowers the combustion temperature, producing less NOx.

Fluidized Catalytic Cracking (FCC or FCCU) - A process that uses a catalyst in the form of particles to change heavy gas oil into gasoline range hydrocarbons. The particles behave like a fluid, hence the name fluidized catalytic cracking. During the process the gas oil feed is heated and mixed with hot catalyst. The hydrocarbon molecules crack into smaller ones as the mixture goes up a riser and into a reaction chamber.

Forced Draft - The use of fans to move gases up a stack.

Forebay - The entry portion of an API separator. The forebay helps keep a constant flow of wastewater to the rest of the unit. When excess water from rain flows into the separator, excess water may flow out of the forebay and into secondary storage.

Fourier Transform Infrared Spectroscopy (FTIS) - A device that uses a infrared light beam to measure exhaust gases.

Fraction - A separate, identifiable part of crude oil; the product of a refining or distillation process.[10]

Fractionator - A tall cylindrical vessel used to separate hydrocarbon fractions by boiling points. The depropanizer and debutanizer are examples of fractionators; they remove propane and butane, respectively, from petroleum. A crude distillation tower is also an example.

Fuel Gas - A fuel mostly made of methane and ethane used as a fuel for heaters in refineries. Fuel gas is collected from light end gases that are byproducts of refinery processes and from hydrocarbons recovered from vapor recovery systems.

Fuel Oil - A thick, black, liquid petroleum product that is often burned for the generation of heat and energy in furnaces, utilities, and ships. Fuel oil is lighter than asphalt but heavier than gas oil.

Fugitive Emissions - The escape of liquid or vapor VOCs into the atmosphere from man made equipment. Fugitive emissions can also be dust from man-made or natural sources. Hydrocarbon emissions from refinery equipment are fugitive emissions.

Gauge Pressure - Pressure relative to atmospheric pressure. 0.0 lbs/in^2 gauge (psig) is equal to 14.7 lbs/in^2 absolute (psia).

Gasoline - The most valuable product acquired from crude oil. Straight run gasoline (90° to 220°F boiling point) is lighter than naphtha. Gasoline is a blend of a number of liquid and gaseous hydrocarbons. Hydrocarbon molecules with four to twelve carbon atoms (C_4 to C_{12}) are gasoline range hydrocarbons. Motor vehicle gasoline contains many additives such as lubricants, dyes, and detergents.

Gas Oil - A refined fraction of crude oil (450° to 800°F boiling point) heavier than kerosene that is often used as blending components for diesel fuel and feed for other refining processes.

Gas Turbine - A thermodynamic device used to change chemical energy from a fuel to mechanical energy. Compressed air and a fuel such as gasoline or natural gas enter the combustor of a gas turbine. Hot gases from the combustion of fuel and air exit at a high velocity, driving a turbine. The mechanical energy from a gas turbine may be used to drive generators for electricity at a refinery. Excess electricity may be sold to utilities. (See Cogeneration)

Gate Valve - A valve used to shut off or turn on the flow of a gas or fluid. The disk of the valve, which permits or restricts a flow through the valve, is generally wedge shaped and moves up or down as the handwheel of the valve is turned.

Gauger - A person who measures and records the petroleum in storage tanks. The person may record the temperature, sediment level, and the level of floating roof tanks.

Globe Valve - A valve used to regulate the flow of a gas or fluid. Turning the handwheel causes the plug on the valve stem to move up or down, which widens or narrows the opening of the port in the valve.

Gravity - See API Gravity.

Gravity Separator - A device that separates oil and solids from water by employing the difference in density between water, oil, and solids. API separators are gravity separators.

Guide Rods - Rods that go through the roof of a floating roof tank. Guide rods prevent the roof from rotating.

Heater - A combustion device that burns fuel gas to heat oil in a refinery.

Heavy Oil - A thick oil with the consistency of cold molasses. It is denser and has more carbon atoms than lighter crude oils. Heavy oil is not as valuable as light oil since it yields less gasoline, naphtha and kerosene but more asphalt than light oil. Any oil with an API gravity less than 20° is considered to be a heavy oil.

Hortonsphere - See Spheres.

Hydrocarbons - Organic compounds of hydrogen and carbon atoms. There is a vast number of these compounds. Crude petroleum is made of a large number of these different compounds (examples: butane, pentane, heptane, octane, benzene, etc.).[11] Emissions of volatile hydrocarbons into the atmosphere can lead to the formation of smog in the atmosphere.

Hydrocracking - Catalytic cracking in the presence of hydrogen. The hydrogen in the process helps prevent the formation of olefins and coke on the catalyst (unlike catalytic cracking or fluid catalytic cracking) because the hydrogen in the process bonds to the extra carbon sites that are developed in hydrocarbon molecules that have been cracked.

Hydrogen Sulfide (H_2S) - An odorous, poisonous, unwanted gas that is encountered in many oil production and refining operations. It has a strong rotten egg odor, but it cannot be detected by a person's sense of smell at high concentrations. Precautions should always be taken for H_2S detection at units where H_2S is handled.

Hydrotreating - A process used to remove sulfur, metals and nitrogen from petroleum. During the process, hydrogen and a catalyst are mixed with petroleum. Sulfur is converted to hydrogen sulfide (H_2S), nitrogen is converted to ammonia (NH_3), and metals are deposited on the catalyst.

Inaccessible Component - A component that is located more than fifteen feet above ground when the only access is from the ground, or a component that is six or more feet from a platform required for access to a component.

Internal Combustion Engine - A thermodynamic device used to change chemical energy from a fuel such as gasoline, natural gas or diesel oil into mechanical energy. Combustion of the fuel within each cylinder of the engine drives pistons which turn a crankshaft. Internal combustion engines may be used to run equipment at refineries.

Intrinsically Safe - Equipment or wiring in which any spark or thermal effect, produced either normally or in specified fault conditions, is incapable of causing ignition of a mixture of flammable or combustible material in air at its most easily ignited concentration.

Iron Sulfide - A black solid compound that forms inside steel vessels that contain sulfur compounds. When it becomes dry in the presence of air, it can begin to smolder, ignite, and produce smoke and odors.

Isomers - Molecules that have the same composition and molecular weight, but a different structure. Examples of isomers are octane and isooctane. Both these molecules have the same atoms in their structure, but the structures differ. The carbon atoms in isooctane are not in one chain, but the carbon atoms in octane are in one chain.

Junction Box - A place where wastewater flows come together. Junction boxes are usually concrete boxes with metal lids. There are usually several of them in a refinery.

Kerosene - A fraction of crude oil (315° to 450°F boiling point) that is a fuel that is heavier than naphtha but lighter than gas-oil. It is equivalent to grades of diesel #1, heating oil #1, and jet A fuel. It has an RVP less than 0.5 psia, so it is not considered to be very volatile.

Landfarming - A means of waste management where petroleum wastes are mixed with soil to allow bacteria to break it down.

Legs - Adjustable poles on the roof of a floating roof tank that hold up the roof when it is emptied. When a floating roof tank is emptied, space is required for the roof drain, inlet, and outlet.

Light Crude Oil - Crude oil that has an API gravity equal to or greater than 30° and a vapor pressure greater than 1.5 psia. It is determined by using ASTM Method D-1298-85.

Liquefied Petroleum Gas (LPG) - Light, hydrocarbon fractions separated from crude oil, usually including propane or butane. Liquefied petroleum gas is gaseous at atmospheric conditions.

Liquid Balancing - A method of removing volatile vapors from a storage tank to make it safe for cleaning. Liquid balancing involves pumping a nonvolatile liquid such as water into a tank to remove vapors.

Loading Rack - A device with a series of fill lines used to load petroleum on to trucks or trains.

Low NOx Burner - A burner in a heater configured to adjust the air/fuel mixture to reduce NOx.

Lube Oils and Waxes - Hydrocarbons refined from crude oil with a paraffinic structure (molecules with straight chains saturated with hydrogen) with a 650° to 1000°F boiling point. Lube oils are lighter than waxes and the two components are separated by distillation.

Manhole - A hatch or plate on a tank used to allow workers access to a tank for cleaning.

Manometer - A device used to measure the relative or gauge pressure inside a vessel. A manometer has a glass tube that contains water or mercury measuring the pressure in inches of water or mercury.

Material Safety Data Sheets (MSDS) - Information sheets provided to users by chemical manufacturers providing information concerning the hazards of materials. The format is specified by the federal Occupational Safety and Health Administration (OSHA) in Title 29, Sections 1915-1917 of the Code of Federal Regulations.

Membrane Treatment - A final treatment process used to remove particles between 0.001 and 10 microns from wastewater. Some of them include: reverse osmosis, microfiltration, and electrodialysis.

Mercaptans - Organic compounds containing sulfur that tend to be very malodorous. Mercaptans are encountered in many refining operations.

Metallic-Shoe-Seal - A floating roof tank seal design consisting of a shoe shaped device connected to a linkage. The linkage has a counterweight that pushes the shoe out toward the tank shell to minimize the gap between the tank roof and the tank shell. The linkage is covered by a fabric or elastic material called the primary seal.

Methane (CH_4) - The simplest saturated hydrocarbon molecule. It is the main component in natural gas and is a byproduct of some refinery processes. It is collected and used as refinery fuel gas.

Molecular Seal - A device on a flare stack used to help keep air out of the flare and reduce the amount of purge gas required.

Molecular Weight - The relative weight of atoms or molecules. The weight of one mole of atoms or molecules, one mole being 6.02×10^{23} individual atoms or molecules. The molecular weight of carbon, for example, is 12.

NAAQS - (National Ambient Air Quality Standards) National Ambient Air Quality Standards are developed by EPA pursuant to Section 109 of the Federal Clean Air Act. NAAQS exist for nitrogen oxides, sulfur oxides, particulate matter, ozone and carbon monoxide.

Naphtha - A volatile, colorless liquid fraction of crude oil that is used to make solvent for paint, dry cleaning fluid, and blending components for gasoline.[10]

Naphthalene - A hydrocarbon that has a ring structure where each carbon atom has a single bond.

Natural Draft - A term for the tendency for hot flue gases to flow upward out of a stack. As gases are heated they expand, their density decreases, and they then tend to rise and be replaced by cooler denser gases, therefore causing a natural draft to occur.

GLOSSARY

Natural Gas - Gaseous hydrocarbons made up of at least 80% methane and maybe some ethane, propane, and butane. Natural gas is often found with crude oil.

New Source Performance Standards (NSPS) - Federal regulations from the EPA for new or modified stationary sources. They are located in the Code of Federal Regulations title 40, part 60. Many of the EPA regulations for refineries are in the NSPS.

Nitrogen Oxides - (NOx) A compound of a nitrogen atom and one or more oxygen atoms. These compounds are emissions of combustion and can lead to ozone formation (examples: NO = nitrogen oxide; NO_2 = nitrogen dioxide). Most of the NOx from combustion processes is in the form of NO, but NO later forms into NO_2. NO_2 is much more harmful than NO.

Nomex - A fire retardant cloth material. Nomex coveralls are usually worn in refineries.

Notice of Violation - Document issued to a company for violating air pollution regulations.

Nozzle - The entrance and/or exit of product from a tank.

Nuisance - Unlawful invasion of a possessor's interest in the reasonable use and enjoyment of a property.

Octane (C_8H_{18}) - The most well known hydrocarbon that is in gasoline. Hydrocarbons between C_4 to C_{12} make up gasoline. Octane is a liquid under atmospheric conditions.

Octane Number (Octane Rating) - A scale varying from 1 to 100 that indicates the antiknock qualities in gasoline. The higher the octane number, the less a fuel has a tendency to "knock".

Olefins - Unsaturated, organic compounds that contain a double bonded carbon atom. Olefins have a high reactivity relative to aromatics and paraffins.

Organic - Of or containing carbon.

Organic Vapor Analyzer (OVA) - A hydrocarbon analyzer used to detect leaks from equipment. It measures total organics in ppmv as methane equivalents. The OVA is more precise than the TLV, but the OVA does not keep calibrated as well. The OVA includes a probe where samples are continuously drawn into the device.

Oxidation Pond - A large shallow pond less than six feet deep used to remove any remaining contaminants in wastewater. Organisms are encouraged to grow to clean the water and remove any remaining petroleum. The water may stay in the pond 11 to 110 days. Unlike aerated lagoons, oxidation ponds do not have aeration equipment.

Ozone - (O_3) A colorless, odorless gas formed from chemical reactions between hydrocarbons, nitrogen oxides and sunlight that is irritating and damaging to humans, plants and animals. It is the main component of smog and is California's biggest air pollution problem.

Paraffin - A hydrocarbon molecule that has all its carbon sites bonded to hydrogen atoms. Paraffins have the lowest reactivity relative to aromatics and olefins.

Particulates (PM) - Solid or liquid particles in the air. Smoke, for example, contains particulate matter. Particulates less than 10^{-6}m in diameter are also called PM10. Particles of this size and smaller are of greatest concern because they can easily pass deep into the lungs.

Permit To Operate - A document issued to the owner or operator of pollution generating or control equipment allowing the owner to use the equipment in a manner to reduce emissions.

Petroleum - In the broad sense, petroleum embraces the whole spectrum of hydrocarbons-gaseous, liquid and solid. In the popular sense, petroleum means crude oil.[11]

PH Scale - A scale ranging from 0 to 14 used to measure the acidity and alkalinity of a solution where 0 is the strongest acid, 14 is the strongest base and 7 is neutral. Numbers less than 7 are solutions of increasing acidity and numbers greater than 7 are of increasing alkalinity.[10]

GLOSSARY

Pit - A lined or unlined excavated depression in the ground which is used intermittently or in emergencies to collect oil and water.

Plug Valve - A valve used to turn a flow on or off. They are a "fast opening" type of valve that can be opened or closed by a quarter turn.

Pontoon - A hollow space on the roof of a floating roof storage tank that provides flotation of the roof on top of the product in the tank.

Pontoon Man Holes - Openings on the top of a pontoon of a floating roof tank that allow inspection of the inside of the pontoon. Several of them are located around the circumference of the pontoon. Pontoon man holes are covered with metal lids.

Pressure Relief Valve - (PRV) A valve on the top of a tank used to prevent the pressure inside a tank from getting too high or too low.

Primary Seal - The main seal around the perimeter of a floating roof tank between the product and the secondary seal. The seal reduces the emission of hydrocarbons from the tank contents by reducing the area of the tank contents exposed to air. There are two main types of seal designs: the metallic-shoe-seal and the resilient-toroid-seal. The seal is made of a fabric or elastic material.

Process Drains - Drains at a refinery that provide drainage of oily wastewater from unit washdowns. Many of them are located throughout a refinery. P-traps prevent hydrocarbons from escaping the drains.

Process Heater - A heater that is not used to heat water for the production of steam. Process heaters are usually used to heat oil.

Process Sewers - Channels that direct wastewater to the wastewater treatment system. They are covered to prevent hydrocarbon emissions.

Process Turnaround - A planned, periodic shutdown of equipment in a refinery in order to do cleaning or servicing. Large emissions of hydrocarbons can occur during a process turnaround.

Propane (C_3H_8) - A fraction of petroleum that is a gaseous fuel at atmospheric conditions that is readily compressed or cooled into a liquid. Propane is also liquefied petroleum gas (LPG), an alternative fuel.

Pump - A device used to add energy to a fluid in order to move the fluid from one location to another. There are generally two types, positive displacement and kinetic.

Purge Gases - Gases, such as natural gas or fuel gas, added to a flare to keep air out of the flare stack. This helps prevent explosions at the flare.

Reactive Organic Compound - (ROC) See Volatile Organic Compound.

Reactive Organic Gas (ROG) - A term used by the Air Resources Board that means the same as volatile organic compound (VOC), but it also includes ethane as a VOC. The EPA definition of VOC does not include ethane.

Refinery - Location where crude oil is distilled and made into many different products.

Reflux - A system where side streams are removed from a distillation tower, cooled and returned to the tower. This helps promote condensation and improve the separation of fractions in the tower.

Regenerator - A refinery vessel into which inactive or spent catalyst is sent to regenerate the catalyst. The catalyst is regenerated by burning off the coating of carbon or coke left on the catalyst from catalytic cracking. Air is mixed with the spent catalyst at a temperature of about 1,100 °F, causing the oxidation of the carbon, leaving the catalyst clean and regenerated.[10]

Regenerator Off-gas - Flue gas or exhaust from the combustion of the coke on the catalyst in the regenerator.

Reid Vapor Pressure - A method of measuring the volatility of a fuel. It is the vapor pressure of a fuel at 100°F. It is a test that was named after the person who developed it.

Residue (Residuum) - A heavy, black, tar-like substance that is left in the bottom of crude distilling columns. Residuum may later be used by refineries to produce coke, asphalt, waxes or greases.

Resilient-Toroid-Seal - A floating roof tank seal design consisting of a foam log connected to the tank roof that minimizes the gap between the roof and the tank wall to help prevent emissions. A fabric or elastic seal also surrounds the foam log. The secondary seal helps seal the air and vapor space between the secondary and primary seals.

Ringelmann Chart - A gray to black smoke scale published by the U.S. Bureau of Mines ranging from 0 to 5, where "5" is black smoke with 100% opacity, "4" is 80% opacity, "3" is 60% opacity, "2" is 40% opacity, and "1" is 20% opacity. 1 is the limit in most districts.

SCOT Process - A process used to remove sulfur compounds from tail gas. Tail gas is mixed with reducing gases and fed into a catalytic reactor to reduce sulfur compounds to hydrogen sulfide. The H_2S is sent to an absorption column where H_2S is absorbed by a di-isopropanolamine (DIPA) solution. H_2S is then stripped from the DIPA solution and sent back to the Claus unit.

Secondary Seal - A seal on the perimeter of a storage tank roof between the primary seal and the atmosphere. The secondary seal is made of an elastic material and in most designs, it curves upward away from the roof toward the tank shell.

Selective Catalytic Reduction (SCR) - A system used to change NOx pollutants to nitrogen by means of catalyst beds. Ammonia or urea must often be added in the system.

Selective Non-Catalytic Reduction (SNCR) - A system used to change NOx pollutants to nitrogen by ammonia injection without the use of a catalyst.

Sight Glass - A glass window on a piece of equipment that allows workers to observe the inside of a process while equipment is running.

Skimmer - A mechanical device used to remove oil floating on top of water by moving it to collection areas. They are often equipped with paddles connected to a rotating belt or chain. The paddles are adjusted so they scrape the surface of the water, pushing oil to a trough for collection.

Skimming - The process of removing small amounts of oil from the surface of water using a skimmer.

Slop Oil (Recovered Oil) - Oil that has been recovered from a wastewater treatment unit such as an API or CPI separator.

Sludge - A thick, heavy emulsion containing oil or oxidized oil, water, carbon and grit.[11]

Sludge Dewatering Unit - A system used to remove water from wastewater treatment sludge. Heated driers, centrifuges or filter presses may be used to dry sludges. Dried sludge may be disposed of as hazardous waste or used as a low Btu fuel.

Solenoid - An electrical unit consisting of a coil of wire in the shape of a hollow cylinder and a moveable core. When energized by an electric current, the coil acts as a bar magnet, instantly drawing in the moveable core. Solenoids are used for opening and closing quick-acting, plunger-type valves.[11]

Solvent Extraction - A process used to remove asphaltic components from paraffinic lube oils by using a solvent such as phenol or furfural. When the solvents are mixed with the lube oils, the asphaltenes dissolve but the solvent doesn't mix with the lube oils. The two liquids can then be separated.

Soot Blowing - A process used to remove soot that collects on tubes in a CO boiler by using steam.

Sour - Natural gas or oil that contains a large amount of sulfur compounds.

Source Test - A test performed on pollution generating or control equipment to determine the emissions from it. Source tests may have to be conducted on equipment without continuous emission monitors to determine the emissions.

SOx (Sulfur Oxides) - A compound of a sulfur atom and one or more oxygen atoms. These compounds are emissions from the combustion of fuels with sulfur in them.

Specific Gravity - The ratio of the density of a liquid to a specified reference density. For liquids the reference density is pure water, which has a specific gravity of 1.0. Oils have specific gravities less than 1.0; oil is lighter than water.[4]

Spheres - A spherically shaped tank that is usually used to store liquefied petroleum gases, such as butane, under high pressures. The spherical shape helps make the tank strong enough to safely withstand high internal pressures.

Stationary Source - A pollution source that is fixed and not moving.

Steam Stripping (Stripping) - The injection of steam into a vessel for heating, or for the removal of contaminants such as hydrogen sulfide and ammonia.

Stuffing Box - A packing gland, chamber, or "box" used to hold packing material which is compressed around a moving rod to prevent the escape of gas or liquid. They contain the pump seal.

Suction Line - A pipeline used to empty a storage tank or other vessel.

Sulfur - An undesirable impurity that often accompanies crude oil. It may be combined with hydrogen in the form of hydrogen sulfide (a lethal gas). It may be attached to a hydrocarbon molecule forming a mercaptan. Mercaptans can be very smelly compounds; an extremely small amount of mercaptan is used to odorize natural gas. Burning substances with sulfur in them produces sulfur dioxide emissions.

Sulfur Dioxide (SO_2)- A pollutant that comes from combustion processes using fuels with sulfur in them. It has a sharp, pungent smell. SO_2 is the source of some odor complaints.

Sulfur Recovery Unit (SRU) - A plant where hydrogen sulfide (H_2S) from the refinery is converted to elemental sulfur.

Surface Tension - A tension force that exists between the molecules of a liquid because of the attraction between polar molecules.

Sweet - Natural gas or oil that contains little or no sulfur compounds.[10]

Swing Line - A device consisting of a pipe (the suction line) providing the exit of the tank contents from a tank and a cable connected to a crank mounted on the outside of a storage tank by the ground. The crank can be turned to raise or lower the level of the suction line. The swing line prevents water and sediment from being pumped out of the tank and disrupting equipment and processes further downstream.[11]

Tail Gas - Residue gas from the Claus process at a sulfur recovery unit; any gas from a processing unit treated as residue.[11]

Tank Farm, Tank Battery - A group of tanks.

Tank Shell - The wall of a storage tank.

Tar - A heavy, black fraction of crude oil. One of the heaviest components of crude, it may also be called **residuum**.

Thermal Oxidizer - A control device used to burn vapors collected from a vapor recovery system. Fuel gas is used to enrich the air/vapor mixture so it is combustible.

Thief - A metal or glass cylinder that is lowered into a tank to obtain a sample of oil or to the bottom of the tank to take a column of heavy sediment. Some thieves have a spring-actuated closing device and they can be operated by jerking a line on the device to collect a sample.[10]

Threshold Limit Value (TLV) - A hydrocarbon analyzer that is often used for detecting leaks from equipment. It measures hydrocarbons as parts per million as methane.

Throughput - The capacity or production limit of a tank or other piece of equipment. Throughput limits may be put on some tanks by Permits to Operate. Throughput is usually in barrels.

Trash Screens (Trash Racks) - An area where refineries dump debris from the wastewater treatment system. They should be totally enclosed since they can be a source of emissions.

Trickling Filter - An aerobic biological treatment process where wastewater is fed over packing that is covered with bacteria and protozoans. The organisms break down the petroleum in the water to carbon dioxide, water and other chemicals.

True Vapor Pressure- The vapor pressure of a substance at its current temperature.

Vacuum Breaker Leg - A leg on the roof of a floating roof tank that is longer than the other legs on the roof. When the floating roof gets close to landing on its legs, the vacuum breaker leg touches first, opening a valve, preventing a vacuum from forming inside the tank.

Vacuum Distillation - A process where residue from the bottom of the atmospheric distillation tower is charged to a vessel called the vacuum distillation tower to fractionate it. The vacuum tower has a vacuum inside it so the heavy hydrocarbon feed boils and vaporizes when it enters the tower. Hydrocarbon fractions then condense on the trays in the tower with the lighter hydrocarbons condensing on the upper trays.

Valve - A mechanical device used to control the flow of liquid or gas from one place to another.

Valve Packing - A material such as plastic, asbestos, or graphite that is packed around the threads of the stem of a valve to prevent leakage from the threads.

Vapor Pressure - The pressure exerted by a vapor that is in equilibrium with its liquid state.[10]

Vapor Recovery System - Unit used to collect vapors of volatile compounds from the handling of crude oil and refined products. A commonly used efficient means of air pollution control used in refineries.

Variance - Permission given to a facility by an APCD or AQMD to legally pollute beyond regulated limits because of a breakdown or other condition.

Viscosity - The measure of the ability of a liquid to flow. A liquid with a high viscosity will not flow as well as one with a low viscosity.

Volatile - A substance that evaporates at a high rate at a low temperature.

Volatile Organic Compound (VOC) - Any compound with at least one carbon atom and with a vapor pressure greater than 0.1 mm mercury except:
methane,
carbon monoxide,
carbon dioxide,
carbonic acid,
metallic carbides,

metallic carbonates,
ammonium carbonate,
methylene chloride,
1,1,1 trichloroethane (methyl chloroform),
1,1,2 trichlorotrifluoroethane (CFC-113),
trichlorofluoromethane (CFC-11),
dichlorodifluoromethane (CFC-12),
dichlorotetrafluoroethane (CFC-114),
chloropentafluoroethane (CFC-115),
trifluoromethane (CFC-23),
HCFC-123 (dichlorotrifluoroethane),
HCFC-134a (tetrafluoroethane),
HCFC-141b (dichlorofluoroethane),
HCFC-142b (chlorodifluoroethane), and
chlorodifluoromethane (CFC-22).

The exact listing of compounds may vary. Some districts use the terms precursor or reactive organic compounds to denote VOC. As a note, many of these compounds which are listed as exempt compounds may contribute to upper atmosphere ozone destruction. Other exempt compounds are being investigated as possible toxic air contaminants. Finally, carbon dioxide is considered to be a "greenhouse gas" which may contribute to global warming, and carbon monoxide is a primary pollutant.

Volatility - The tendency of a liquid to evaporate. Liquids with high boiling points have low volatility and vice versa.

Wastewater - Water that is contaminated with petroleum, ammonia, phenols, sulfides, and solids. The water contamination occurs from the use of water for unit wash downs, the crude desalter and other areas.

Water Indicator Paste - A substance that is used to indicate the level of water in a storage tank. The material is applied to a gauge line and the line is lowered into a storage tank. When the line with the paste on it contacts water, the paste changes color.

Wellman-Lord Process - A process used to remove sulfur compounds from sulfur recovery unit tail gases. During the process, tail gas is incinerated with air to form SO_2 and then it is cooled. The SO_2 is put into an absorption tower and contacts a solution of sodium sulfite ($NaHSO_3$) that absorbs and reacts with

the SO_2. Sodium pyrosulfate ($Na_2S_2O_5$) and sodium bisulfite ($NaHSO_3$) are created by the reaction with sulfur dioxide. The sulfur rich solution is sent to a regenerator where Sulfur dioxide is removed by heat and sent back to the Claus unit.

Working Losses - Hydrocarbons that are lost from a storage tank as a result of the filling and emptying of the tank. These losses may be released by pressure relief devices or vents.

Index

A

acid gas 204 - 3
aerated lagoons 303 - 13
alkylation 100 - 32
amine 201 - 5, 204 - 2
ammonia slip 201 - 11
API separators 303 - 3, 303 - 7, 303 - 32
aromatic 100 - 15, 100 - 28
asbestos 100 - 37
asphalt 100 - 19
atmospheric gas-oil 100 - 19, 203 - 3

B

ball valve 301 - 2
Beavon Stretford 204 - 4
biotreaters 303 - 11, 303 - 33
blanket gas 202 - 2
blending 100 - 32
blowdown 202 - 1
blowdown system 202 - 2
boiler 201 - 3
boiling range 100 - 25
boiling temperatures 100 - 12
bottoms 100 - 26
breakdown relief 202 - 4
brine 303 - 1
bugs 303 - 11
burner 201 - 5
butane 100 - 17, 100 - 22
butterfly valve 301 - 2
butylene 100 - 32

C

C5C6 100 - 11, 100 - 22
carbon filters 303 - 14
carbon monoxide (CO) 100 - 9, 100 - 10, 201 - 18
catalytic cracking 100 - 29, 100 - 38
CEM certification 201 - 14
centrifugal pump 301 - 10
chlorination 303 - 13
clarifier 303 - 11
Claus process 204 - 4
CO 100 - 9
CO boiler 203 - 11
coagulation-sedimentation 303 - 12
coke 203 - 5
coker gas-oil 203 - 3
condenser 100 - 26
confidential data 203 - 30
confined space 302 - 44
continuous emission monitors (CEMs) 201 - 13
convection section 201 - 4
cooling tower 304 - 1, 304 - 5
corona discharge 203 - 10
CPI Separators 303 - 3, 303 - 7, 303 - 32
crude oil 100 - 16
cumulative gap 302 - 60
cycle oil 203 - 3
cyclones 203 - 7
cycloparaffin 100 - 15

D

DAF 303 - 3, 303 - 9, 303 - 11, 303 - 33
DEA 201 - 5, 204 - 2
desalter 100 - 22, 303 - 1
diesel 100 - 18, 100 - 23
diesel #1 100 - 18
distillation 100 - 24, 100 - 26, 100 - 27
diurnal losses 302 - 9
DNF 303 - 3, 303 - 33
drains 303 - 1
driver 301 - 10

E

electrostatic precipitator (ESP) 203 - 8
emergency horn signals 100 - 35
emergency roof drain 302 - 19
ethane 100 - 16, 100 - 22
exempt tanks 302 - 3

F

FCC start-up and shutdown 203 - 12
fill line 302 - 4
firebox 201 - 4
flame 201 - 28
flare stack 202 - 2
flashing 100 - 27
flocculating agents 303 - 9, 303 - 12
flue gas recirculation 201 - 7
fluidization 203 - 5
fluidized catalytic cracking (FCC) 203 - 1
forced draft 201 - 7
forebay 303 - 7
fractional distillation 100 - 24
fractionation 100 - 24
FTIR 202 - 4
fuel oil 100 - 19
fuel staging 201 - 7
fuel gas 201 - 4
fuel gas scrubbing 204 - 2
fugitive VOC emissions 301 - 1

G

gas-oil 100 - 19, 100 - 23
gas velocity 203 - 10
gas-blanketing 302 - 11
gas-fired heaters 201 - 1
gasoline 100 - 15, 100 - 17
gate valve 301 - 2
globe valve 301 - 2
granular activated carbon (GAC) 303 - 13
gravity separators 303 - 3, 303 - 7

H

H_2S 201 - 5
hazards 100 - 36
heat exchanger 304 - 3
heating oil #1 100 - 18
heating oil #2 100 - 18
heavy gas-oil 203 - 3
heel 302 - 2
heights 100 - 37
hexavalent chrome 304 - 7
hydrocarbons 100 - 11
hydrocracking 100 - 30
hydrofluoric acid 100 - 36
hydrogen sulfide 100 - 36
hydrotreated gas-oil 203 - 3
hydrotreating 100 - 28

I

induced draft 201 - 7
iron sulfide 204 - 10
isobutane 100 - 32
isomer 100 - 15

J

jet-A 100 - 18
JP-4 and JP-5 100 - 18
junction boxes 303 - 1, 303 - 3, 303 - 5, 303 - 31

K

kerosene 100 - 18, 100 - 23

L

light gas-oil 100 - 25, 203 - 3
liquid trap 304 - 11
loading and unloading catalyst 203 - 11
low-NOx burner 201 - 28
lube oil 100 - 20

M

manual gauging of tanks 302 - 4
maximum gap 302 - 60
MEA 201 - 5, 204 - 2
membrane treatment 303 - 13
mercaptan 204 - 2
methane 100 - 16, 100 - 22
mist eliminator 202 - 5
modification 201 - 13
molecular seal 202 - 7
molecular weight 100 - 12

N

naphtha 100 - 17, 100 - 22, 100 - 23
naphthene 100 - 15
natural draft 201 - 6
New Source Performance Standards (NSPS) 201 - 12, 203 - 13, 204 - 11
nitrogen oxides (NOx) 100 - 8, 100 - 9, 201 - 7, 201 - 14
non-permit confined space 302 - 44

O

odors from wastewater 303 - 1
odors from sulfur units 204 - 10
olefins 100 - 14, 203 - 5
OVA 303 - 31
overhead 100 - 26
oxidation ponds 303 - 12
ozone 100 - 8

P

P-traps 303 - 5
packing 301 - 2, 303 - 9
paraffin 100 - 15
particulate loading 203 - 10
particulates 100 - 10
permit confined space 302 - 44
pilot flame detector 202 - 8
plug valve 301 - 2
positive displacement pump 301 - 10
potential fire 100 - 36
pre-mix burner 201 - 5, 201 - 28
precipitator collection efficiency 203 - 10
precursor 100 - 8
primary seal 302 - 15
process drains 303 - 3
process heater 201 - 3
process sewer 303 - 5
propane 100 - 16, 100 - 22
psia 100 - 12
purge gas 202 - 7
purging 202 - 2

R

radiant section 201 - 4
recovered oil 303 - 7
reflux 100 - 26
reforming 100 - 31
regenerator off-gas 203 - 7
regenerator off-gas expander turbine 203 - 8
Reid vapor pressure 100 - 12
relief valve 202 - 1, 202 - 5
residual 100 - 23
response time 301 - 38
ROG 100 - 9, 100 - 15
roof drain 302 - 19
RVP 100 - 12

S

safe fill 302 - 2
safety 100 - 33
safety relief valve 202 - 1
salts 303 - 1
sampling 100 - 35
sampling well 302 - 18
SCOT tail gas unit 204 - 7
scrubbing 201 - 5, 204 - 2
secondary seal 302 - 17
selective catalytic reduction (SCR) 201 - 11, 201 - 28
selective non-catalytic reduction (SNCR) 201 - 11, 201 - 29
sewers 303 - 1
shoe-type roof seal 302 - 16
sidestream 100 - 26
skimmers 303 - 7, 303 - 32
slop oil 303 - 7
sludge 303 - 15
smokeless flare 202 - 5
soot blowing 203 - 12
sour crude 204 - 1
sour water stripping 204 - 3
SOx 100 - 8
spark rate 203 - 10
spent catalyst 203 - 5
spent catalyst regeneration 203 - 6
standpipe 304 - 6, 304 - 7
steam stripping 100 - 27
straight-run gas-oil 203 - 3
suction line 302 - 4
sulfur dioxide 100 - 9
sulfur oxides (SOx) 100 - 8, 201 - 16
sulfur recovery unit (SRU) 204 - 1
sulfur removal 201 - 5
surge 202 - 8
sweet crude 204 - 2
swing line 302 - 4

T

tail gas incineration 204 - 7
tank breathing cycle 302 - 9
tape gauge 302 - 6
thermal oxidizer 303 - 14
TLV 303 - 31
toroid seal 302 - 17
trash racks 303 - 32
trickling filter 303 - 9

V

vacuum breaker leg 302 - 20
vacuum distillation 100 - 26, 100 - 27
vacuum gas-oil 100 - 19, 203 - 3
valve parts 301 - 1
vapor pressure 100 - 12
viscosity 100 - 13
volatile organic compounds (VOCs) 100 - 9, 100 - 15

W

waste gas burning 201 - 11
wastewater 303 - 1, 303 - 5
water draw 302 - 19
water indicator paste 302 - 6
water seal 202 - 7
wax 100 - 20
Wellman-Lord tail gas unit 204 - 7
wetting emissions 302 - 14
wicking emissions 302 - 14
working losses 302 - 9