SIZE-SELECTIVE SAMPLERS FOR PARTICULATE MONITORING IN CALIFORNIA

Interagency Agreement No. ARB A9-116-30

Final Report

October 1981

Prepared by

Walter John, Stephen Wall and Jerome J. Wesolowski

Air and Industrial Hygiene Laboratory
Laboratory Services Branch
California Department of Health Services
2151 Berkeley Way
Berkeley, California 94704

Submitted to: John Holmes, Ph.D., Chief
Research Section
State of California
Air Resources Board
P.O. Box 2815
Sacramento, CA 95812

EXECUTIVE SUMMARY

The California Air Resources Board and the U. S. Environmental Protection Agency have been preparing the basis for a new particle standard with specification of particle size, since this parameter is a determinant of the health hazard and visibility reduction associated with particulate matter. New size-selective samplers will be required to replace the Hi-vol. During the present project, a new "inhalable" particle sampler, the Size-Selective hi-vol, was tested and evaluated. In addition, the AIHL cyclone, a "respirable" particle sampler, was modified and retested.

The Size-Selective Hi-vol consists of an inlet which, when mounted on the top of a conventional Hi-vol, provides a 15 μm cut off in aerodynamic particle diameter. The EPA has designated particles less than 15 μm to be "inhalable", these particles being deposited below the trachea when inhaled. The Size-Selective Hi-vol has a high flow rate, providing a large quantity of particulate for chemical analysis. Tests were conducted under static wind conditions, using laboratory aerosol. The 50% cutoff was verified to be 15 μm, and to be insensitive to flow rate. The deposits on the 8 x 10" filter were uniform within 3%. A non-uniform aerosol cloud will produce a non-uniform deposit on the filter, but the magnitude of the non-uniformity should not be a significant problem. Data from other tests by the authors show that large solid particles have a small excess penetration of the inlet compared to liquid particles, but the amount is acceptable for practical purposes.

Wind tunnel measurements by others indicate that variation of the particle cutoff characteristics with wind speed is acceptable. On the basis of this test data and the present static tests, it is concluded that the Size-Selective Hi-vol is a satisfactory "inhalable" particle sampler. A remaining problem, the formation of artifact sulfate and nitrate on the glass fiber filter, may be solved in the future by use of quartz fiber filters.

The AIHL cyclone can provide a particle size cutoff of 2.5 or 3.5 μm, depending on the flow rate, and is therefore a "respirable" particle

sampler. Particles below about 3 μm are deposited primarily in the deep, non-ciliated lung. Previous tests, both in the laboratory and in the field, have shown the AIHL cyclone to have excellent sampling characteristics. The cyclone was equipped with a filter holder modified to accept cassette-mounted membrane filters, to facilitate field use and to reduce the cost.

The cyclone was retested and found to operate in a single flow regime from 5 to 200 L/min. The 50% particle cutpoints were 3.5, 2.5 and 1.2 μm at 16.7, 24 and 55 L/min, respectively. The 1.2 μm cutpoint will be useful for special purposes such as sampling in remote areas for correlation with visibility. Deposits on the after-filter were found to be uniform within about 5%. These laboratory tests and results from ARB field tests indicate that the AIHL cyclone is very suitable for "respirable" particle sampling.

SIZE-SELECTIVE SAMPLERS FOR PARTICULATE MONITORING IN CALIFORNIA

Interagency Agreement No. ARB A9-116-30

Final Report

October 1981

Prepared by

Walter John, Stephen Wall and Jerome J. Wesolowski

Air and Industrial Hygiene Laboratory
Laboratory Services Branch
California Department of Health Services
2151 Berkeley Way
Berkeley, California 94704

Submitted to: John Holmes, Ph.D., Chief
Research Section
State of California
Air Resources Board
P.O. Box 2815
Sacramento, CA 95812

ABSTRACT

The sampling efficiency of the Size-Selective Hi-vol has been measured with monodisperse DOP particles under static wind conditions. The 50% cutpoint is verified to be 15 μm and to be insensitive to flow rate. Particle deposits on the 8 x 10" filter are 3% lower near the corners than in the center. Sampling a non-uniform aerosol cloud results in non-uniformity on the filter, but reduced by a factor of three. On the basis of these static tests and other available information including particle bounce tests by the authors, it is concluded that this instrument is a satisfactory "inhalable" particle sampler, with the exception of a possible problem from artifact formation on the glass fiber filter.

The AIHL cyclone was modified to accept cassette-mounted membrane filters and retested. The pressure drop vs. flow rate curve shows the cyclone to operate in a single flow regime from 5 to 200 L/min. Using monodisperse oleic acid particles, the 50% cutpoints at 16.7, 24 and 55 L/min are found to be 3.5, 2.5 and 1.2 μm respectively. The data at 55 L/min fit the same universal curve as that at lower flow rates. Deposits on the after filter were uniform to within 5%. The cyclone has therefore been found to perform well with the new filter holder.

INTRODUCTION

In recent years, there has been increasing recognition of the importance of using size-selective samplers for the monitoring of particulate matter. Both the California Air Resources Board and the U. S. Environmental Protection Agency have programs directed towards the establishment of new particle standards.[1,2] In this connection, various size-selective samplers are being deployed in trial networks. Early results have revealed deficiencies in the samplers, reflecting the incomplete state of development of the new technology. This experience emphasizes the need for thorough validation of new samplers. The present work involves testing and evaluation of a new "inhalable" particle sampler, the Size-Selective Hi-vol, and modification and retesting of the AIHL cyclone, a "respirable" particle sampler.

It is well known that airborne particulate matter can produce adverse health effects by itself and in synergism with gaseous pollutants.[2] The size of the particles determines the site of deposition within the respiratory system. The EPA has defined the particles in the size range from 0 to 15 μm as "inhalable", those which are deposited in the airways starting at the trachea.[1] The inhalable particles include the relatively large particles which deposit in the upper airways and are either absorbed directly or transported via the mucous to the gastrointestinal tract as well as smaller particles which are deposited in the deep lung. The particles in the size range from 0 to 2.5 μm, the "respirable" particles, are deposited in the deep, non-ciliated lung.[3] The EPA designation of this second size range differs somewhat from the earlier one used by industrial hygienists[3] in that the cutoff is sharp rather than gradual as it is in the lung, and the 50% cutpoint is at 2.5 μm rather than 3.5μm.

Although health effects are of prime concern, other effects of suspended particles, such as visibility reduction are important. Visibility is affected by the scattering of light by submicron particles.[4] Particle size is also a key parameter in the determination of the sources of particles for control

purposes. In ambient air, particles smaller than 2.5 μm are primarily due to combustion processes while particles larger than 2.5 μm are produced mainly by mechanical processes.[5] In fact, the non-attainment of the TSP standard in certain areas has been attributed to wind-blown dust sampled by the Hi-vol, including particles up to 50 μm and larger. This consideration alone would justify the use of a particle sampler with a smaller particle size cutoff.

Size-Selective Hi-vol

This relatively new sampler[6] consists of an inlet which is mounted on the top of a conventional Hi-vol (Figure 1). A set of nine acceleration nozzles facing an aluminum plate constitutes an inertial impactor which, including the effects of the 16 collection tubes, results in a 50% cutpoint at 15 μm. The collection tube geometry is intended to prevent reentrainment of particle deposits. Some advantages of this sampler include simplicity and relatively low cost, and the possibility of retrofitting existing Hi-vols. The high flow rate produces a large sample for chemical analysis. Disadvantages are the single size fraction sampled (0-15 μm) and the restriction to glass fiber filters. The latter introduce artifacts from gas-to-particle conversion. However, it may be possible to circumvent this problem by using quartz filters. The EPA has deemed the sampler to be sufficiently attractive to justify deployment in the inhalable particle network.

The results of wind tunnel tests[6,7] on the Size-Selective Hi-vol indicate that variation of sampling efficiency with particle size and wind speed is acceptable, according to EPA criteria.[8] Additional data on the performance are sparse. In particular, particle bounce and reentrainment need to be assessed, since the sampler employs a smooth aluminum impaction plate. Other important characteristics which should be investigated are the effect of variation in flow rate on the particle sampling efficiency and the uniformity of the filter deposit.

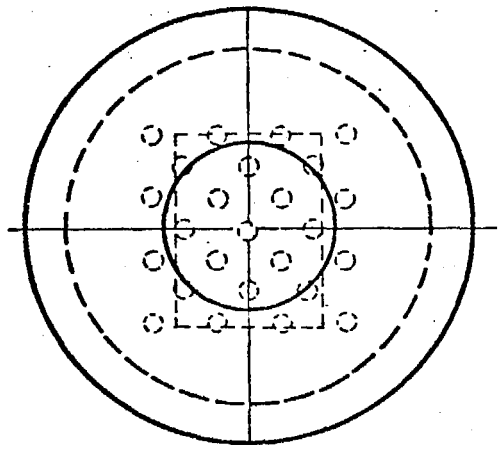

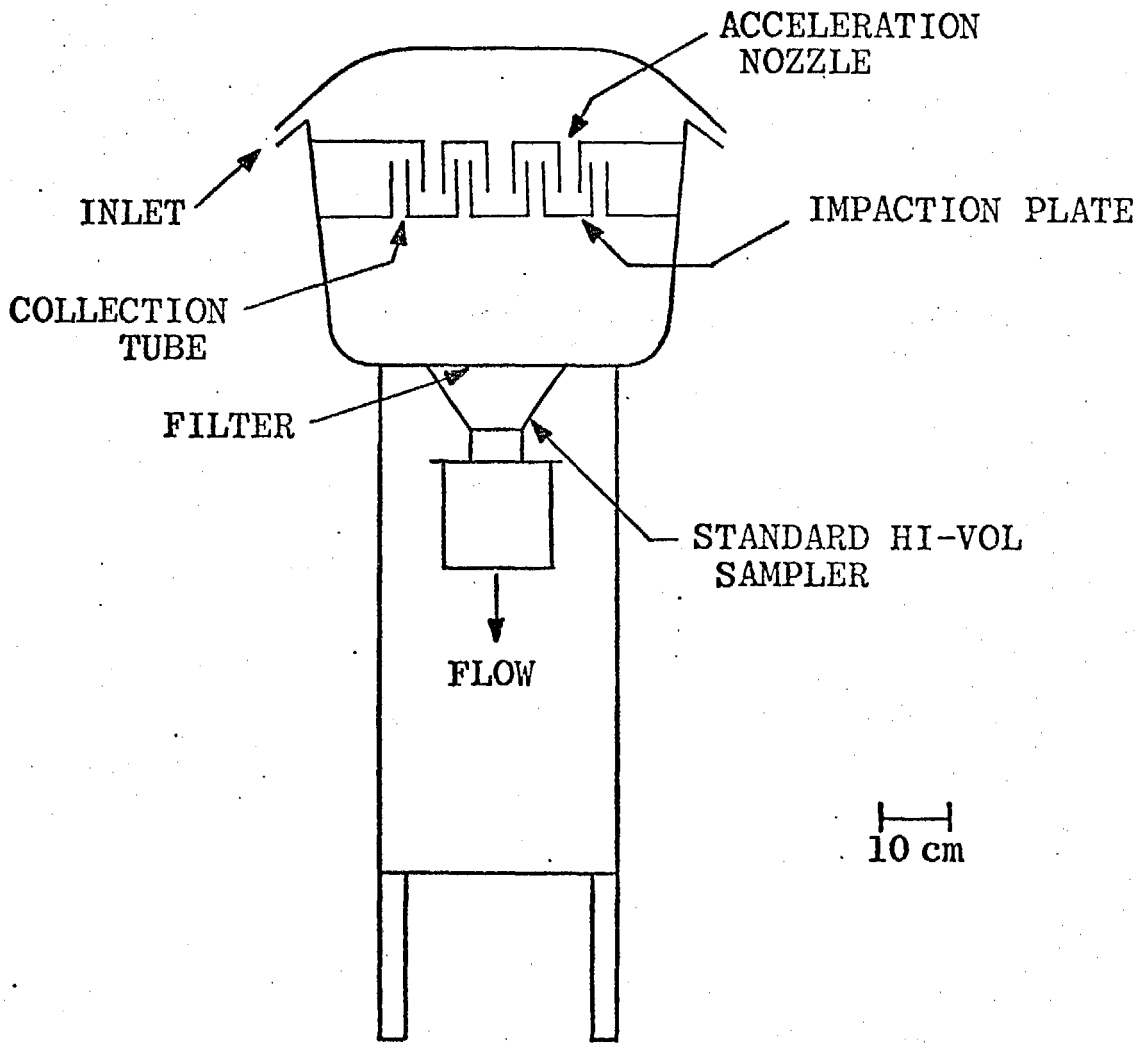

Figure 1 Size-selective hi-vol sampler.

The AIHL Cyclone

The AIHL cyclone,[9] developed with support from the ARB, is a sampler for respirable particulate in ambient air (Figure 2). This cyclone was subjected to extensive laboratory testing and has been used in several field studies. Recent data from ARB fine particulate monitoring at several California sites showed high correlations between the cyclone data and that from the fine fraction of the dichotomous sampler.[10] The cyclone data had the smaller standard deviation. The cyclone is a relatively trouble-free device which tolerates heavy loading; it is therefore attractive for sampling the respirable fraction. The ARB could satisfy California's need for respirable sampling by using the cyclone to supplement the Size-Selective Hi-vol. The AIHL cyclone is also useful for special purpose sampling when only the fine particle fraction is desired. It has been used for studies of ambient air, near asbestos sources and for correlations of fine particulate with visibility.

Field experience with the cyclone indicates that it would be useful to have a filter holder which accepts cassette-mounted membrane filters. These can be preloaded in the laboratory. Retesting of the cyclone equipped with a modified filter holder is necessary to ensure that the performance has not been affected. It is also desirable to have the cyclone calibration extended to a higher flow rate, to allow sampling with a 1 μm cutpoint for special purposes, such as visibility studies, where it may be desirable to exclude the tail of the coarse particle distribution.

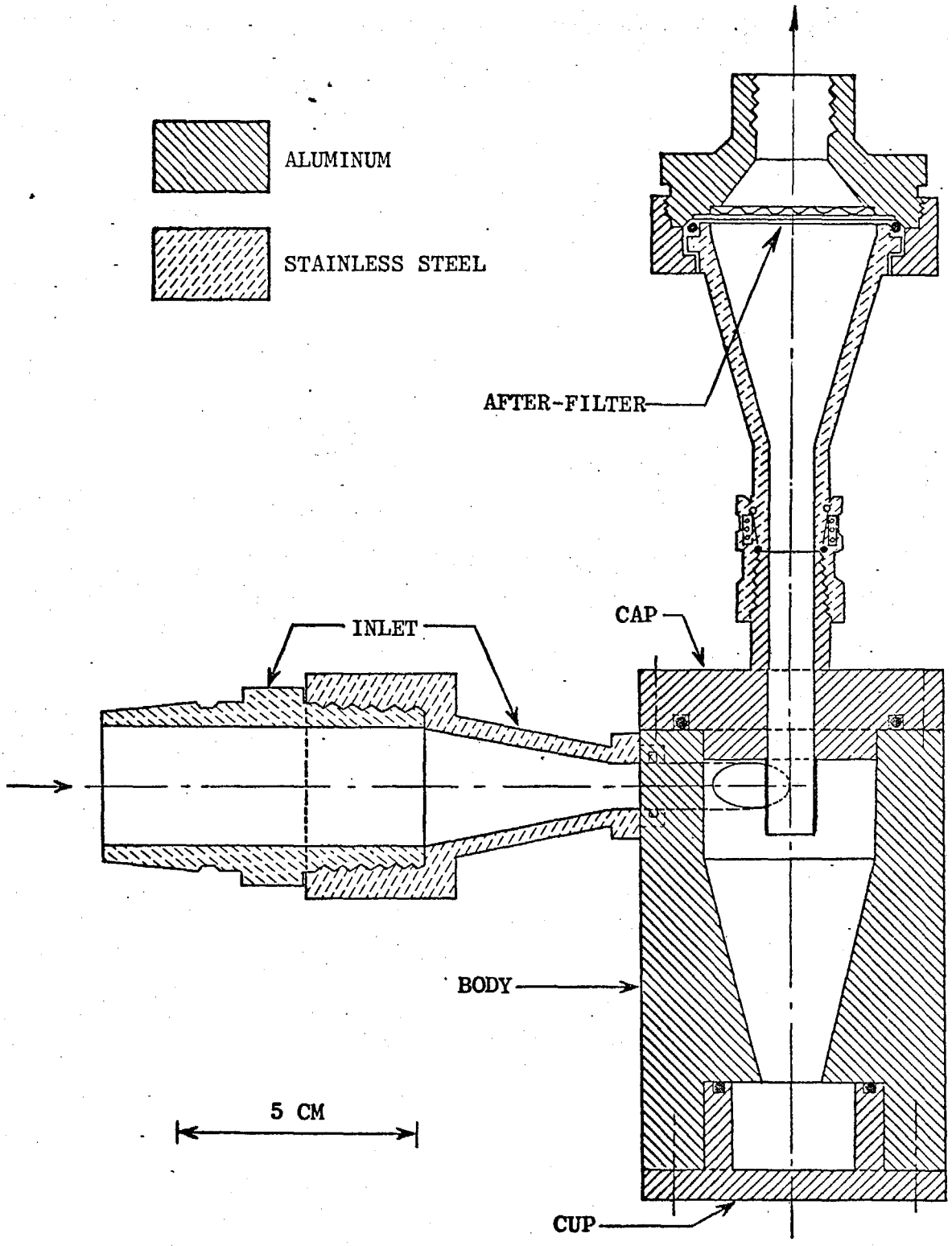

Figure 2 AIHL cyclone sampler.

EVALUATION OF THE SIZE-SELECTIVE HI-VOL

Dimensional Measurements

Measurements were made on the key dimensions (Figure 3) of the sampler which was tested. These are summarized in Table 1. Most of the dimensions agree well with the EPA specifications. One exception is the inside diameter of the acceleration nozzle (dimension E). However, as shown later, the consequent increase in jet velocity does not significantly shift the particle size cutpoint. The acceleration nozzles were also slightly, but not seriously, out-of-round. The only other dimension worthy of comment is the acceleration nozzle to impaction plate spacing (dimension H). The relatively large variance is caused by a slant of the impaction plate relative to the acceleration nozzle plate. The impaction plate was misaligned during installation. Again, the error is judged not to affect performance. Therefore this sampler can be considered representative for testing purposes.

Sampling Efficiency vs. Particle Size

The experimental arrangement is shown in Figure 4. The sampler was placed in a test chamber with a vertical flow of clean air from a HEPA filter. The excess was vented from the lower portion of the chamber. Monodisperse aerosol was supplied by a Berglund-Liu vibrating orifice generator operating upside down to facilitate extraction of large particles. For transport to the test chamber the aerosol was introduced in the top half of a pipe with clean air on the bottom half to reduce sedimentation losses. A small fan mixed the aerosol in the chamber. Dioctyl phthalate (DOP) containing 1% uranine dye was nebulized in a 90-10 vol-% alcohol-water solution. Particle size and concentration were monitored with a Climet 201 optical particle counter. In order to measure the aerosol concentration entering the sampler, 25 mm filter samplers were placed inside the top cover, 3 cm from the entrance slit, facing the flow (Figure 5). Four such filters, located 90° apart, were operated at an isokinetic flow rate. Since these filters sampled the aerosol actually entering the SSI, the efficiency measurement was insensitive to air currents in the test chamber. The sampling efficiency was obtained by dividing the yield of

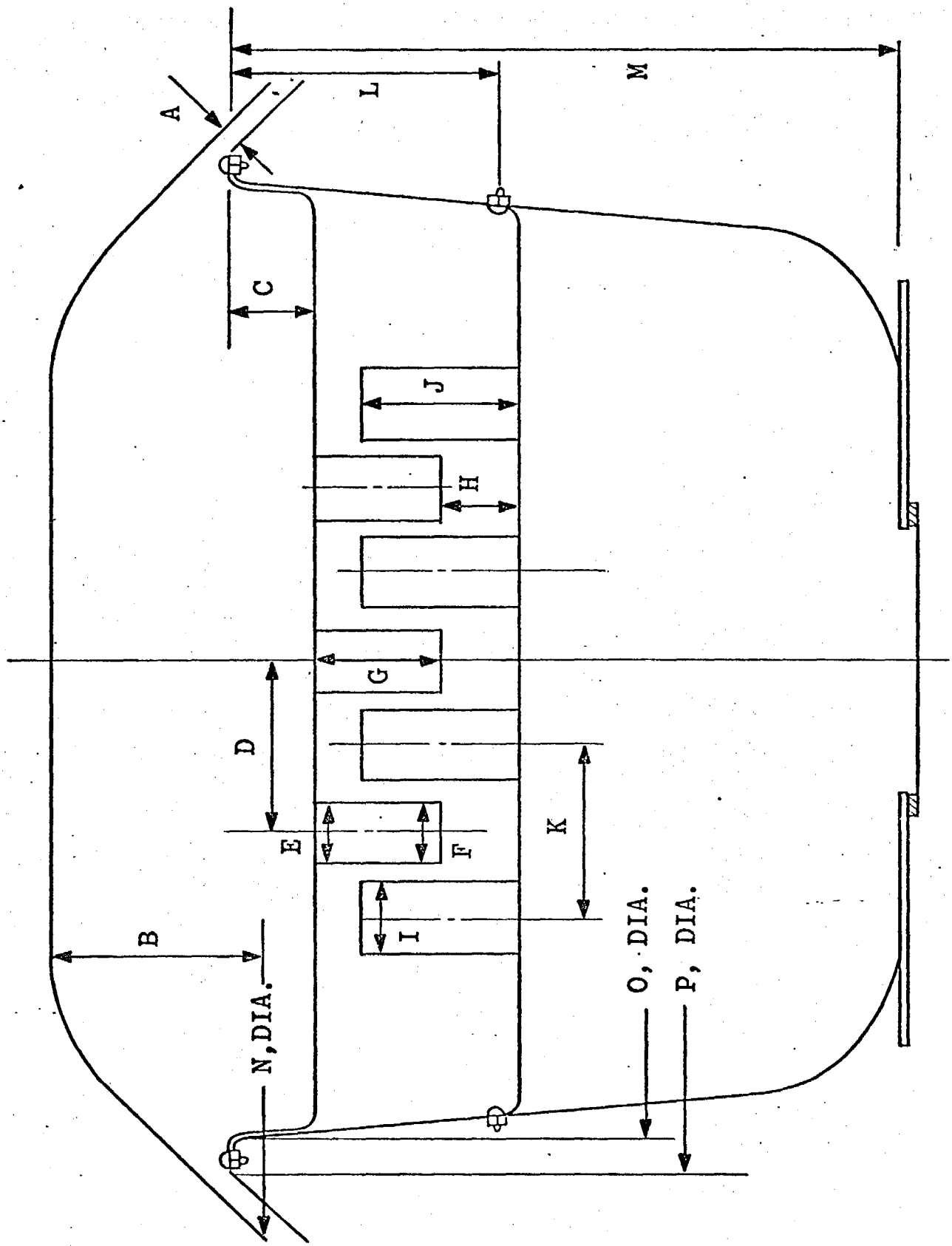

Figure 3 Key for dimensional measurements of the size-selective hi-vol listed in Table 1.

TABLE 1

DIMENSIONS (IN INCHES) OF THE SSI TESTED IN THE PRESENT WORK[a]

See Figure 3 for Location Key

	Location	Specification[b]	Ave. measured dimension ± std. dev.	Precision[c]
A	Inlet gap spacer (4)	0.75	0.750 ± 0.001	0.001
B	Inlet dome height	4.8	4.820 ± 0.001	0.001
C	Acceleration nozzle plate detent	1.80	1.899 ± 0.007	0.001
D	Acceleration nozzle spacing (9 nozzles)	4.0	3.98 ± 0.03	0.001
E	Acceleration nozzle inlet I.D.	1.444	1.421 ± 0.002	0.002
F	Acceleration nozzle exit I.D	1.444	1.426 ± 0.004	0.002
	out of round[d]	--	0.003 ± 0.003	0.002
G	Acceleration nozzle length	2.83	2.825 ± 0.004	0.003
H	Acceleration nozzle to impaction plate spacing	--	1.439 ± 0.019	0.002
I	Collection tube I.D. (16 tubes)	1.380	1.381 ± 0.003	0.002
J	Collection tube length	3.48	3.465 ± 0.005	0.001
K	Collection nozzle spacing	4.0	4.00 ± 0.01	0.001

TABLE 1 continued

	Location	Specification[b]	Ave. measured dimension ± std. dev.	Precision[c]
L	Impaction plate bolt hole height	5.685	5.686 ± 0.002	0.002
M	Chamber height	14.6	14.6 ± 0.1	0.06
N	Inlet dome dia.	27.6	27.63 ± 0.03	0.03
O	Chamber dia.	22.00	22.0 ± 0.10	0.06
P	Chamber and flange dia.	24.0	24.0 ± 0.1	0.06

Notes: [a]Sierra Instruments Model UV-5H.

[b]EPA specifications based on drawings from Texas A & M University.

[c]The precision applies to measurement of a single part or at one location.

[d]Difference of measurements at 90° to each other.

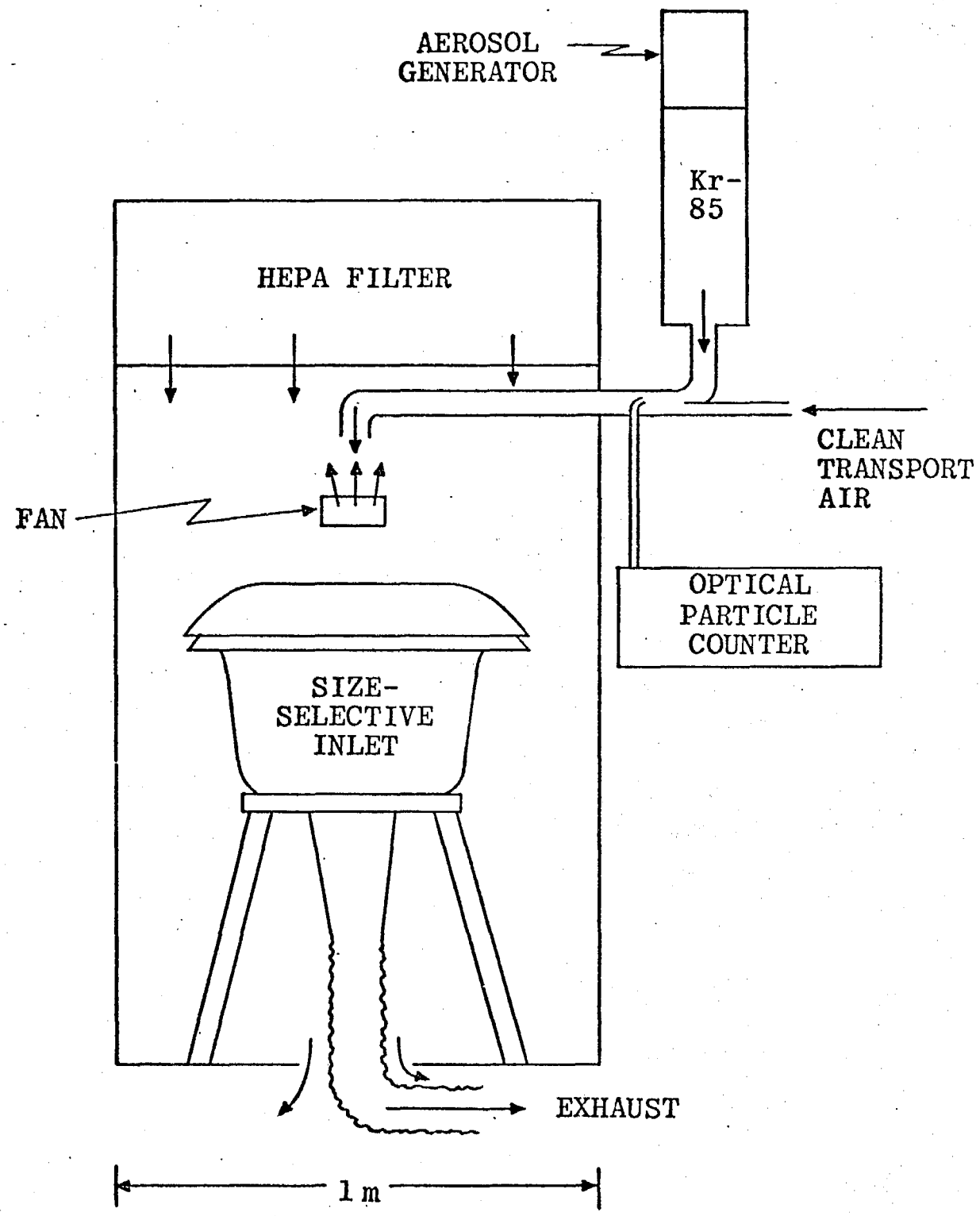

Figure 4 Experimental arrangement for testing of the size-selective hi-vol with laboratory aerosol.

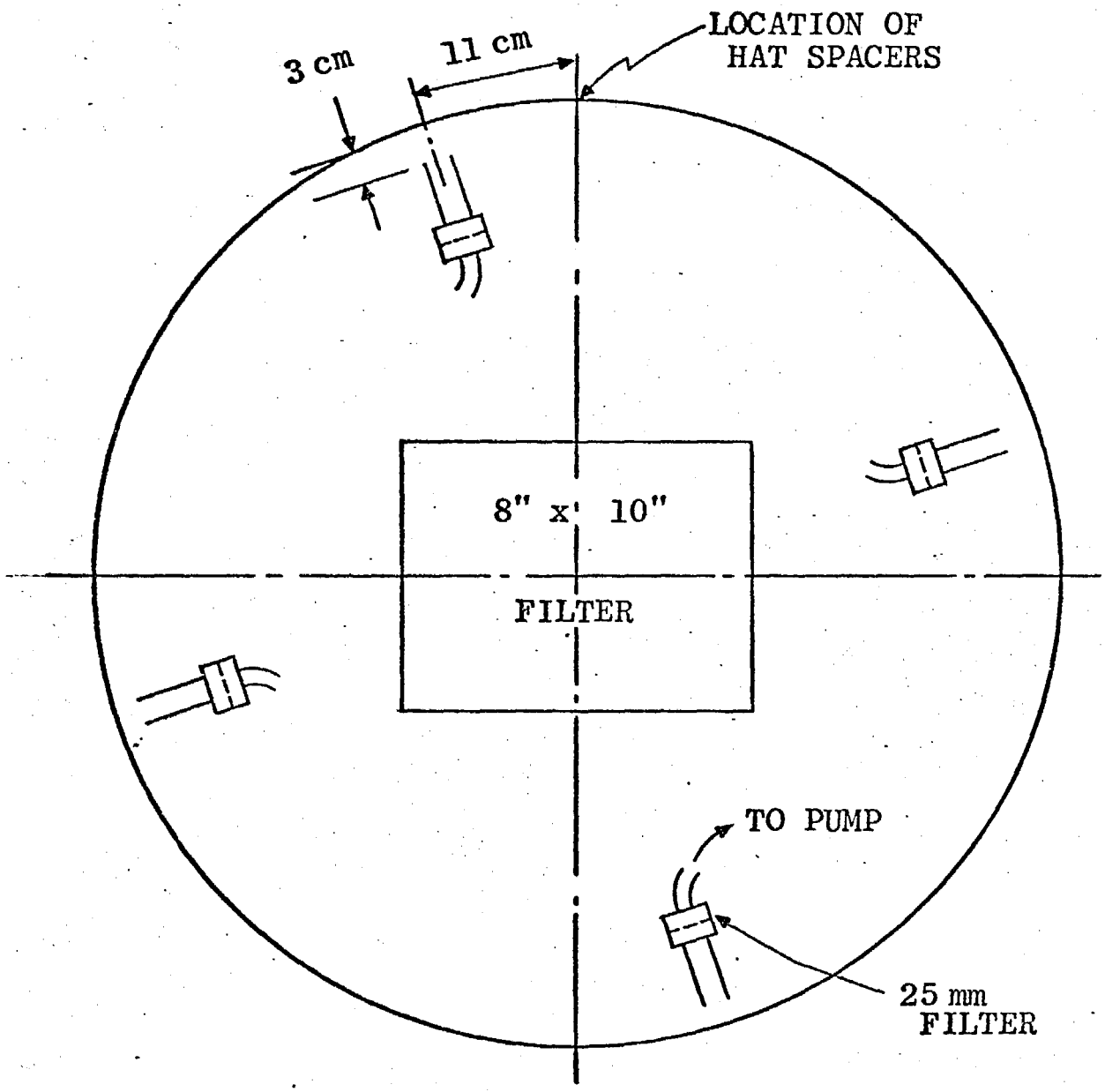

Figure 5 Top view of size-selective hi-vol showing the placement of 25 mm filter samplers used to determine the concentration of the incoming aerosol.

uranine on the SSI glass fiber filter by that on the four 25 mm filters, normalized to the same flow rate.

For the 25 mm filters, a 1 μm pore size Teflon membrane (Fluoropore) was used. These were sonicated for 10 minutes in 90-10 vol-% alcohol-water solution and quantitated on an Aminco fluorometer. Multiple extractions showed the first wash to remove typically 99% of the uranine. The 8" x 10" glass fiber filter was homogenized in a blender containing alcohol-water solvent. The slurry was then vacuum-filtered through 0.2 μm Nuclepore to remove the glass fibers. The first extraction removed more than 99% of the uranine.

The measured sampling efficiencies are shown in Figure 6. The 50% cutpoint is verified to be 15 μm. The efficiencies at 10 and 15 μm are in excellent agreement with the cutoff curve found by McFarland and Ortiz for 2 km/hr wind speed. At 18 and 20 μm, the present data points at zero wind speed are somewhat higher than the 2 km/hr curve, a result which is not unreasonable. However, the experimental uncertainties do not permit a definite conclusion. The data taken by Wedding[7] at 2 km/hr are also shown for comparison.

Variation of the Cutpoint with Flow Rate

The sampling efficiency for 15 μm DOP particles was measured at 30, 40 and 45 CFM. The plot of these data in Figure 7 shows the efficiency to remain unchanged within the errors. This result, which is favorable for field use of the sampler, indicates that the SSI does not operate as a conventional impactor, otherwise the efficiency would have dropped by about a factor of 2 over this range of flow rates.

Uniformity of Filter Deposits

The uniformity of the deposits on the 8" x 10" glass fiber filter was investigated for 10, 15, 18 and 20 μm DOP particles. The 47 mm discs were cut from the center and the four corners for separate quantitation of the uranine deposits. The data, normalized to 100 at the center position, are shown schematically in Figure 8. The 25 mm filter samplers in the inlet slit were

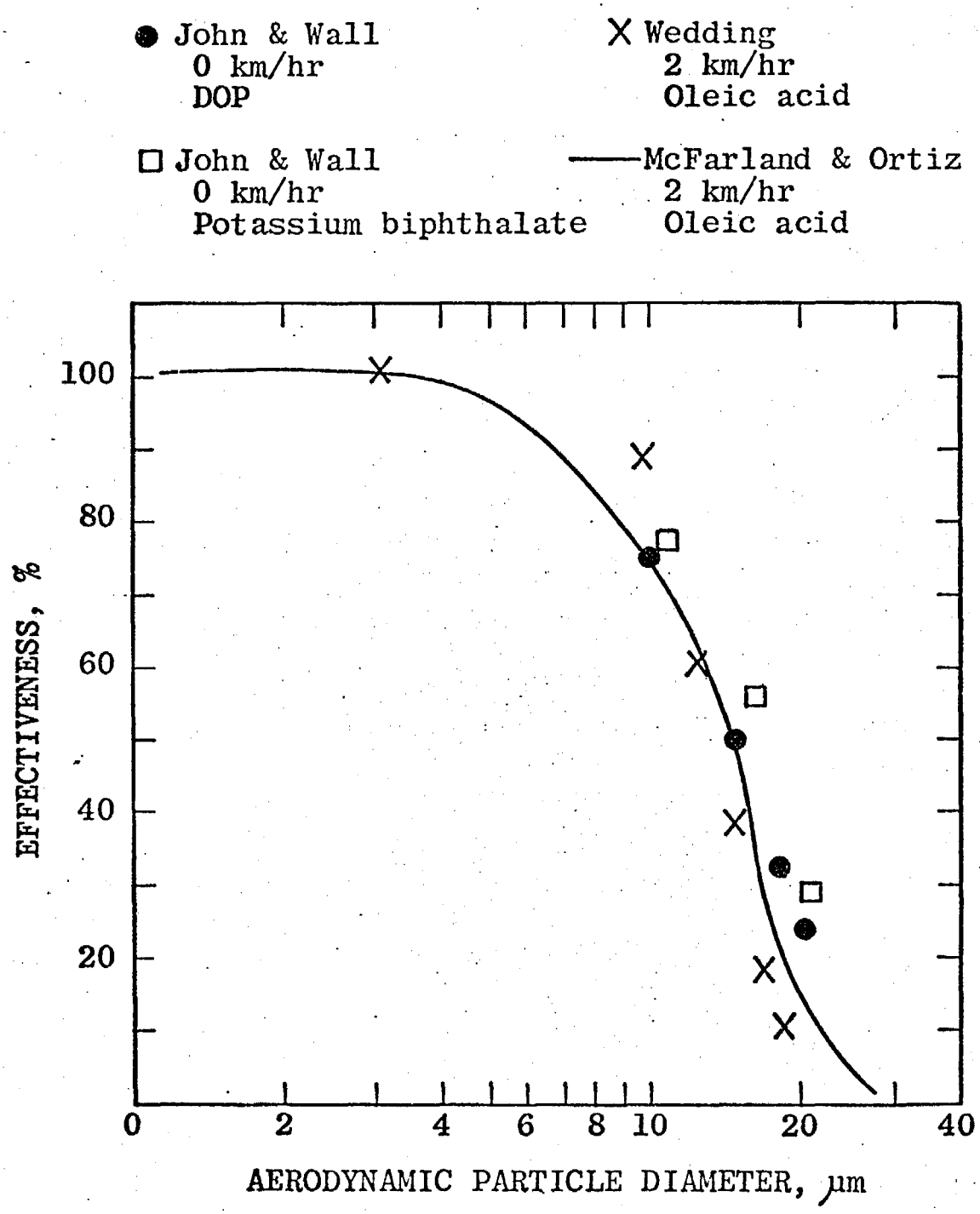

Figure 6 Sampling effectiveness of the size-selective hi-vol measured in the present work at zero wind speed for liquid (DOP) and solid (potassium biphthalate) particles. Data from wind tunnel tests at 2 Km/hr wind speed are shown for comparison.

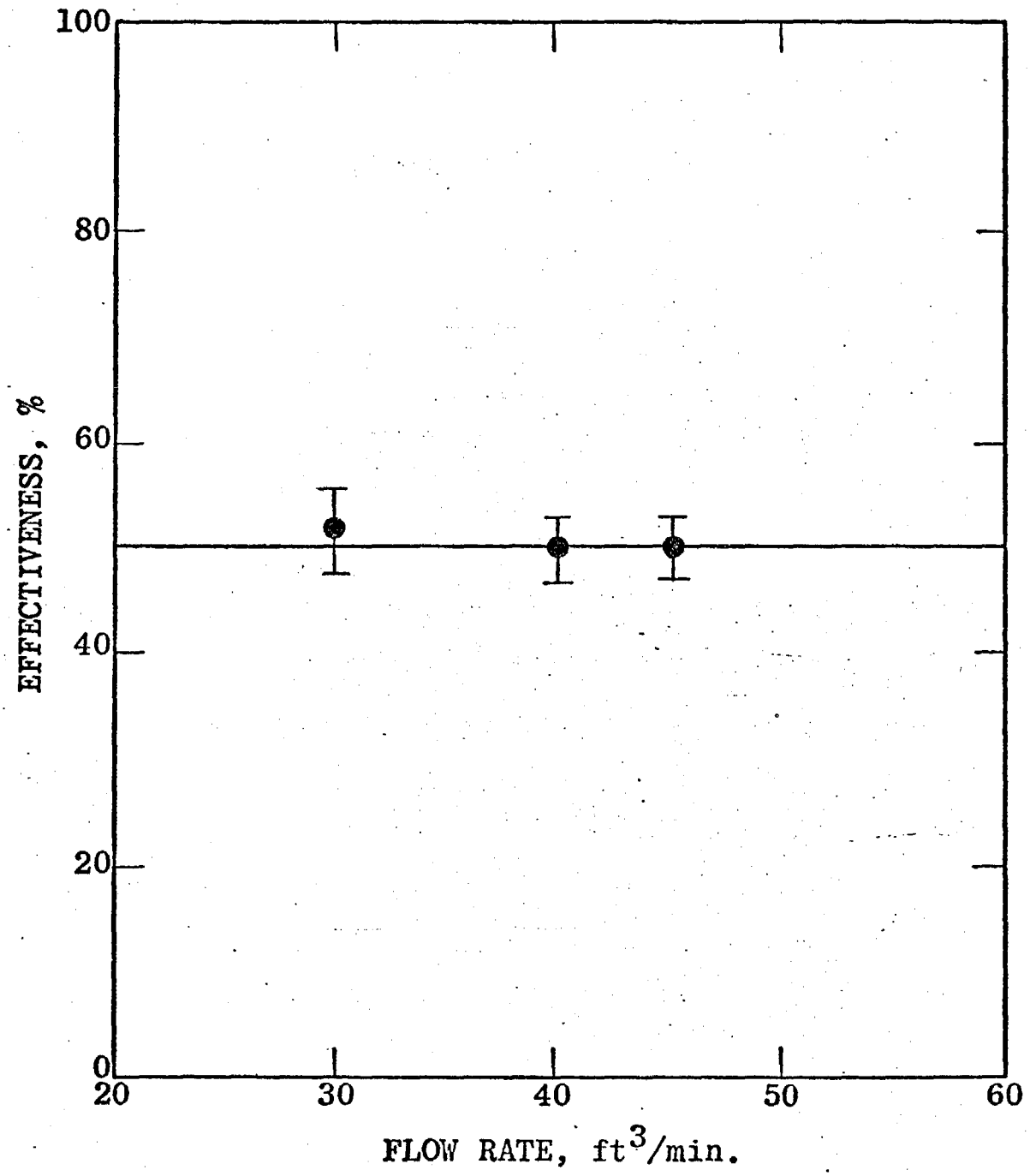

Figure 7 Sampling effectiveness of the size-selective hi-vol vs. flow rate for 15 μm DOP particles.

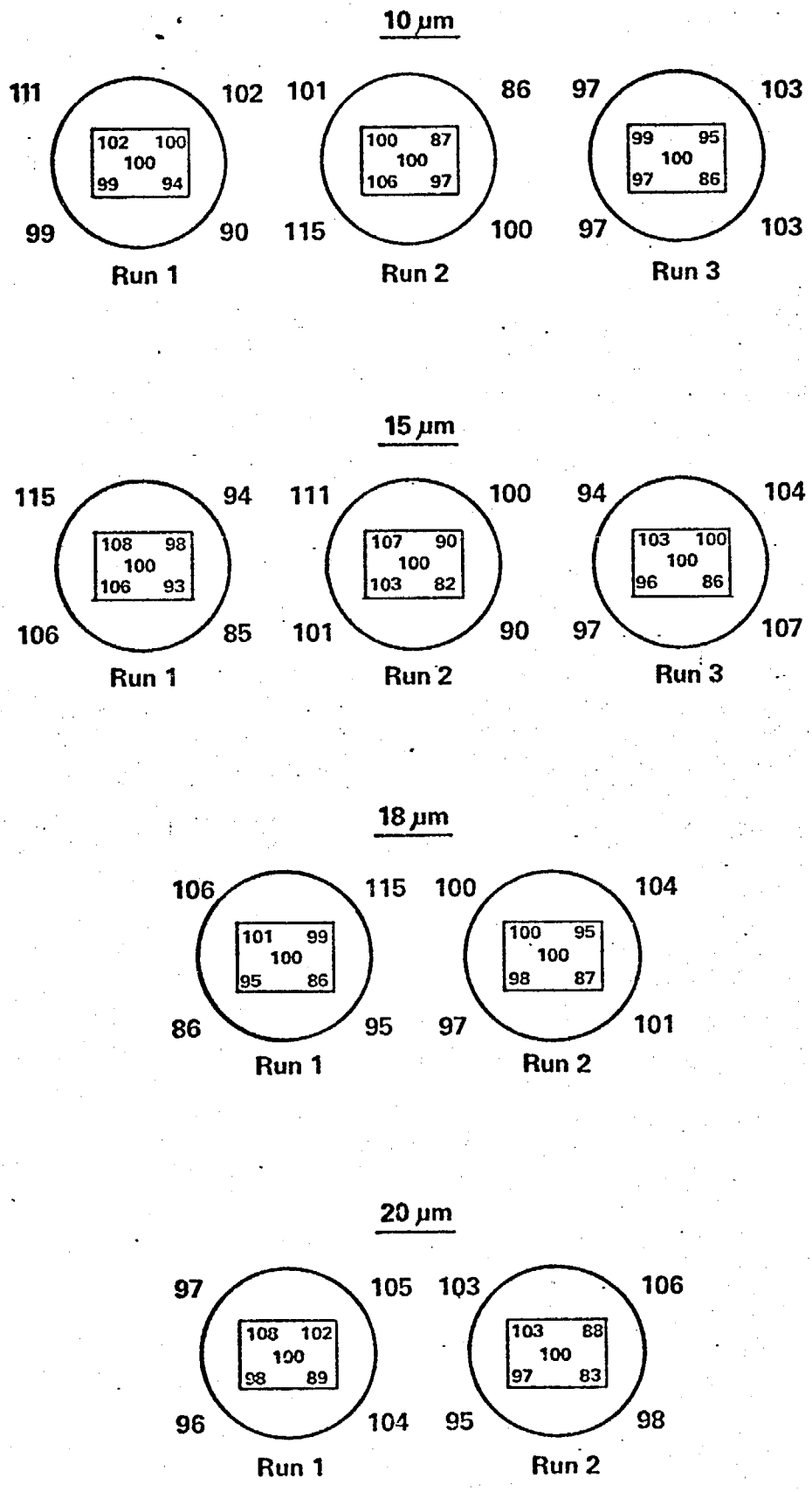

Figure 8 Data from tests of the uniformity of particle deposits on the size-selective Hi-vol filter. Numbers outside the circles are the relative concentrations of the aerosol sampled; numbers inside the rectangles are the relative areal concentrations on the filter.

also run to determine the uniformity of the entering aerosol. The uranine yields on adjacent 25 mm filters were averaged to obtain the aerosol concentrations opposite the corners of the 8" x 10" filter. These data, normalized to 100, are shown outside of the circles in Figure 8.

Analysis of the data, summarized in Table 2, shows that the deposits at the corners of the filter are systematically slightly lower than at the center. At 10 μm, the most relevant particle size for sampler operation, the difference is only 3%. The coefficients of variation of the corner deposits are also tabulated vs. particle size. For comparison the coefficients of variation of the entering aerosol are listed. To investigate the influence of the non-uniformity of the entering aerosol on the non-uniformity on the filter, the corner concentrations were plotted vs the nearest entering concentration. Figure 9 is the plot for 10 μm particles. A high correlation, R = 0.88, is obtained. The slope of the line implies that the filter concentrations vary about 1/3 as much as the entering concentrations. The correlation coefficient decreases with increasing particle size, as shown in Figure 10.

The data may be interpreted as follows. At 10 μm, the particles are well below the cutpoint and therefore follow the streamlines. Aerosol entering one side of the sampler will be sampled on the corresponding side of the filter. Above the 15 μm cutpoint the particles begin to cross streamlines at bends because of inertia, increasing the uniformity of the particles across the filter.

Assessment of Particle Bounce

Recently John and Wall[11] have tested the SSI with solid particles to determine the extent of particle bounce, i.e., excess penetration of solid particles relative to liquid particles. In one set of measurements, solid potassium biphthalate (KHP) particles were generated with the Berglund-Liu aerosol generator by spray-drying solutions. Sampling efficiences of the SSI were determined in a manner similar to that described above for DOP aerosol. The KHP results are plotted in Figure 6. The excess penetration by KHP compared to DOP ranges from 7 to 10% in the vicinity of the cutpoint.

TABLE 2

UNIFORMITY OF FILTER DEPOSITS

Particle Dia., μm	Ave. difference, (corner-center), %	Corners $\sigma/\bar{X}$, %	Entering Aerosol $\sigma/\bar{X}$, %
10	- 3.2	6.0	7.9
15	- 1.5	8.7	8.8
18	- 4.9	6.0	8.5
20	- 4.0	8.9	4.7

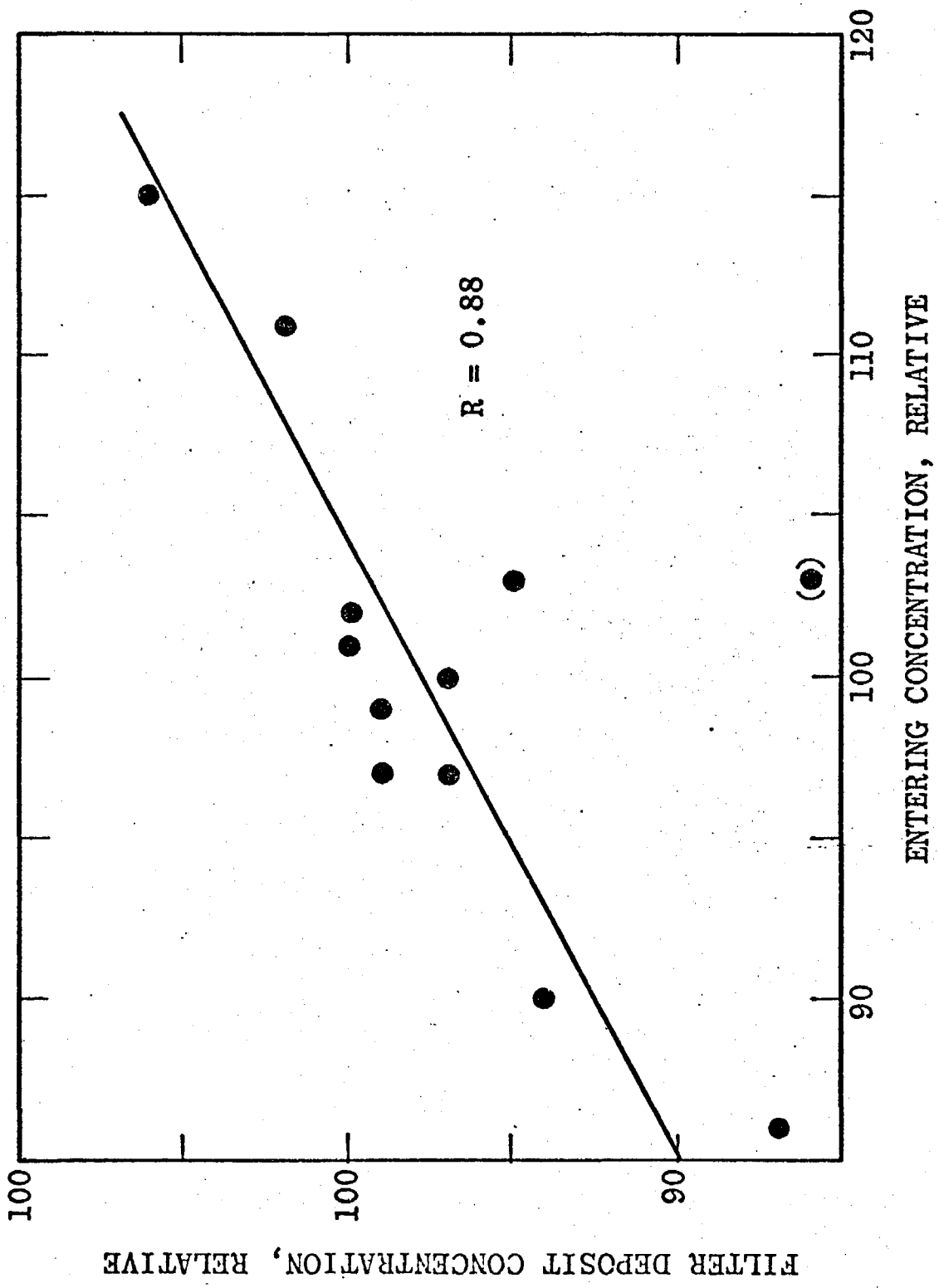

Figure 9 Correlation between the entering concentration of 10 μm aerosol particles and the filter deposit concentration on the nearest corner. The point in parentheses was omitted from the regression analysis.

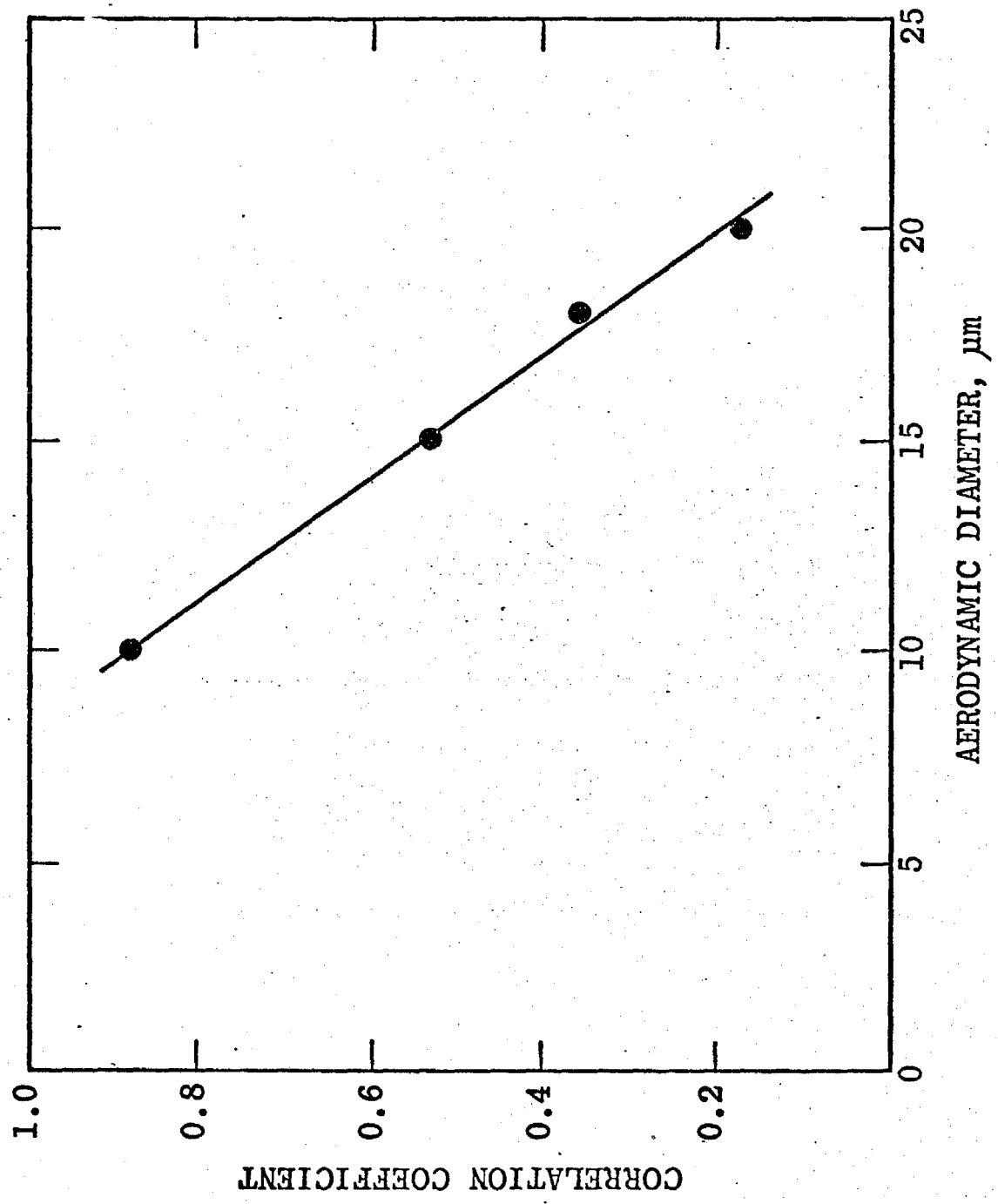

Figure 10 Plot of the correlation coefficients for various particle diameters, derived from data as in Figure 9.

A second set of measurements for particles from 34 to 62 μm aerodynamic diameter was made by generating aerosols of sized glass beads and A/C Test Dust ("Arizona Road Dust") using a fluidized bed. Penetration efficiencies were established gravimetrically. The results, plotted in Figure 11, indicate a penetration of 3 to 4%. The A/C Test Dust point for 62 μm particles may be high owing to break up of the particles.

The magnitude of the excess penetration by solid particles found in the above measurements is fairly small. Furthermore, KHP and glass particles are very elastic compared to any particles which are likely to be present in ambient air. Therefore, it may be concluded that the amount of excess penetration by solid particles in the SSI is acceptable for most practical applications.

The small penetration by large solid particles does not imply that particle bounce is absent in the SSI. During the experiments reported above it was noted that very few of the KHP particles or glass beads were deposited on the impaction surface directly below the acceleration nozzles. Instead, the deposits were closer to the bases of the collection tubes. Those particles which impacted below the jets therefore bounced but their subsequent trajectories, which are also influenced by gravity, did not result in their collection by the exit tubes. It is likely that particles are trapped in eddies near the bases of the collection tubes. Again the evidence indicates that the SSI does not operate like a conventional impactor. Indeed, the SSI has distinct advantages over the ordinary impactor for present purposes.

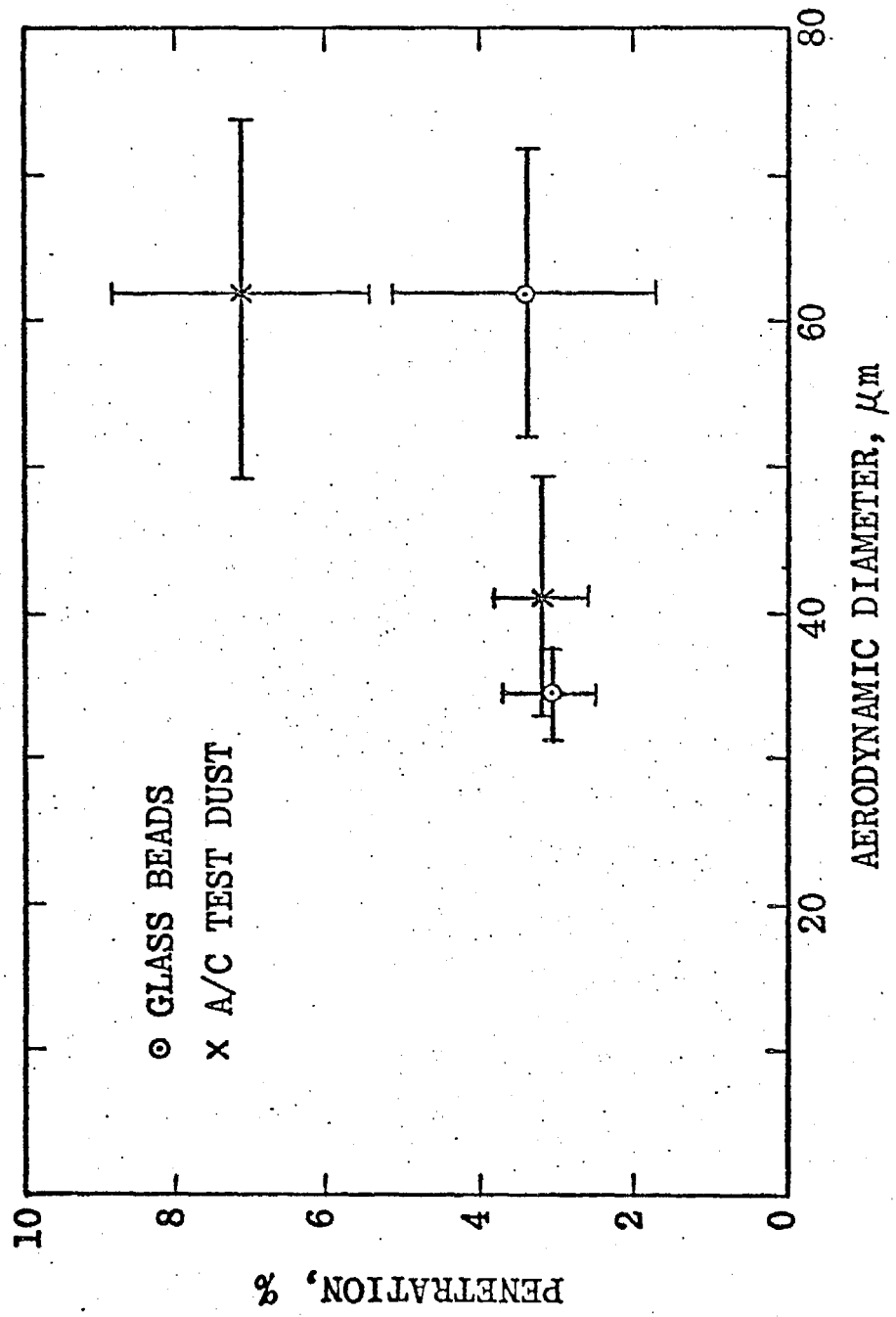

Figure 11 Penetration of the size-selective Hi-vol inlet by large solid particles, from measurements by John and Wall (Ref. 10).

CYCLONE MODIFICATION

Filter Holder

The redesigned filter holder is shown in Figure 12 . The vortex tube is integral with the exit tube and top of the cyclone. The half angle of the cone is only 10°, in order to prevent flow separation. A brass clamping ring is used to prevent seizing with the aluminum threads on the vortex tube. The stainless steel filter screen affords a larger open area than the photo-etched screen previously used. The 47 mm membrane filter is preloaded in a filter cassette, then placed in the filter holder where it is sealed between two O-rings.

Pressure Drop vs. Flow Rate

The variation of the pressure drop with flow rate is a sensitive indicator of the fluid flow, a break in the line signifying a change in flow regime. Previous testing of the cyclone showed it to operate in a single flow regime.[9]

Pressure drops were measured across the entire cyclone with the redesigned filter holder in place, but without a filter. Pressures from 0.05 to 50 cm H_2O were measured with a precision water manometer and from 70 to 130 cm with a magnehelic gage. Flow rates from 4 to 14 L/min were measured with a wet test meter, from 15 to 60 L/min with a dry test meter and from 50 to 175 L/min with a rotameter. The data points in Figure 13 are fitted to high accuracy by a straight line. The absence of break points indicates a single flow regime from 5 to 200 L/min.

Sampling Efficiency vs. Particle Size

Sampling efficiencies were measured with the arrangement shown in Figure 14. Monodisperse aerosol from a Berglund-Liu vibrating orifice aerosol generator passed through a Kr-85 charge neutralizer and into a manifold. The particle size and concentration was monitored continuously by a Climet-201 optical particle counter. The aerosol was sampled from the manifold simultaneously at

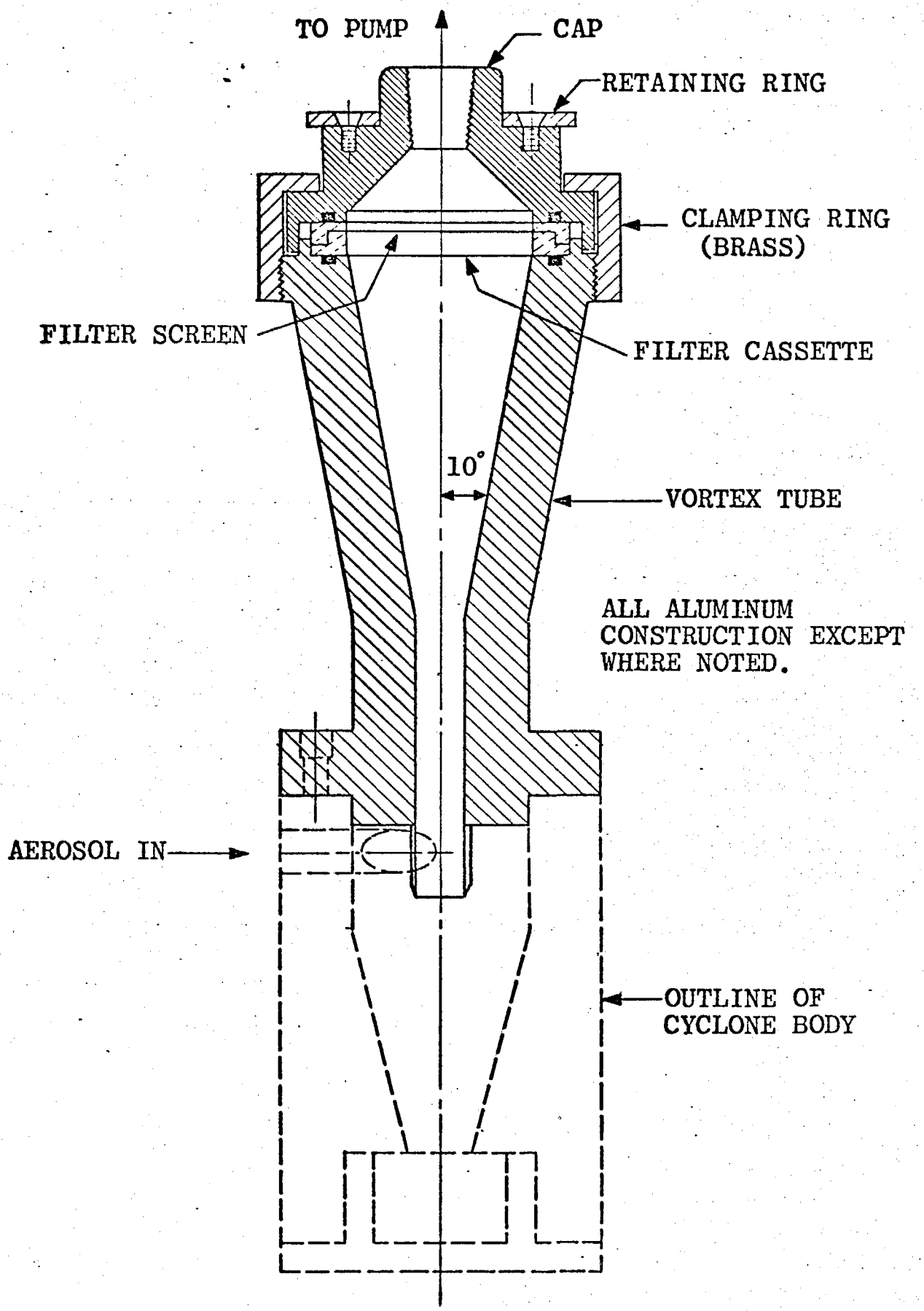

Figure 12 New filter holder for the AIHL cyclone to accommodate cassette-mounted membrane filters.

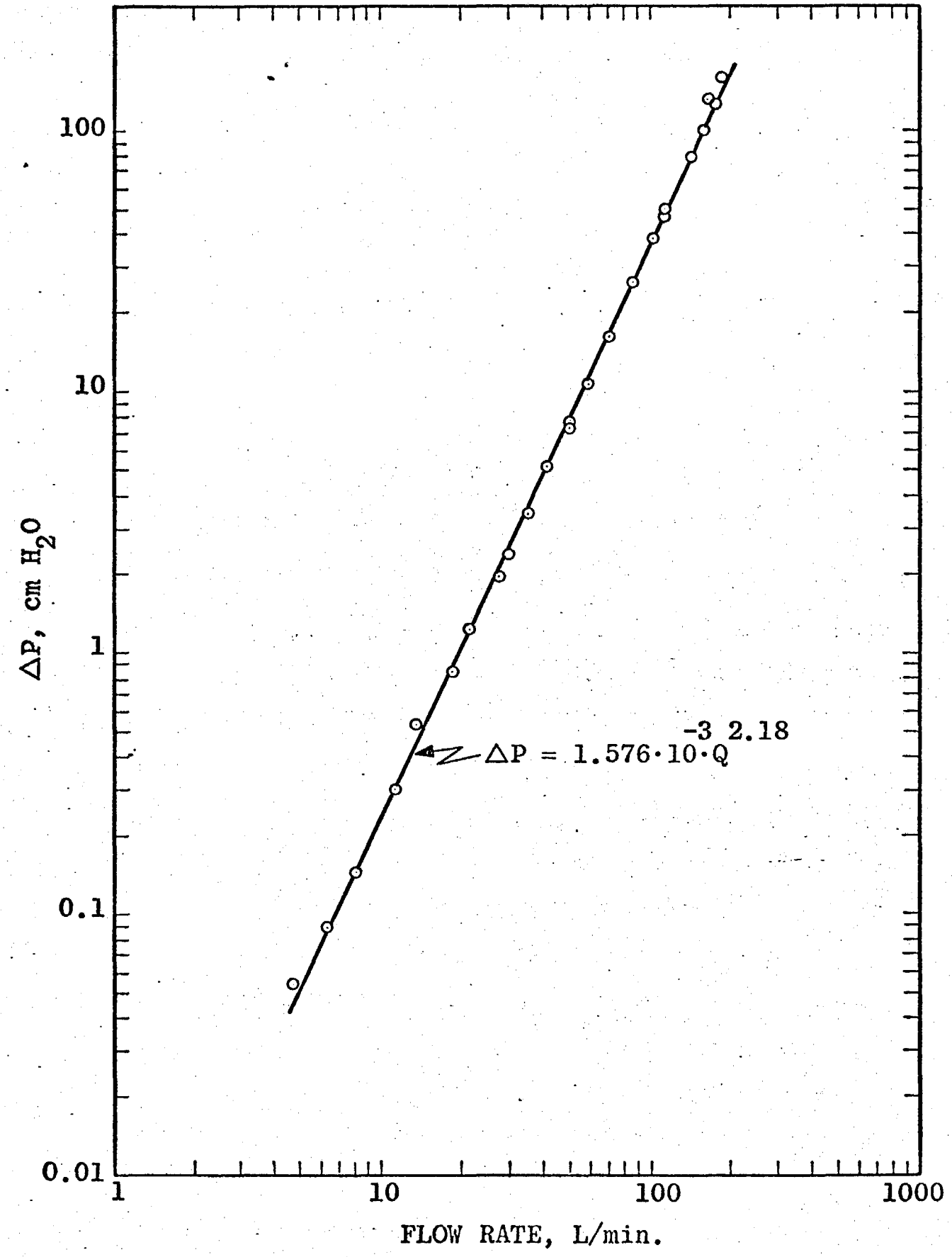

Figure 13 Pressure drop across the AIHL cyclone with the new filter holder (without filter) vs. air flow rate.

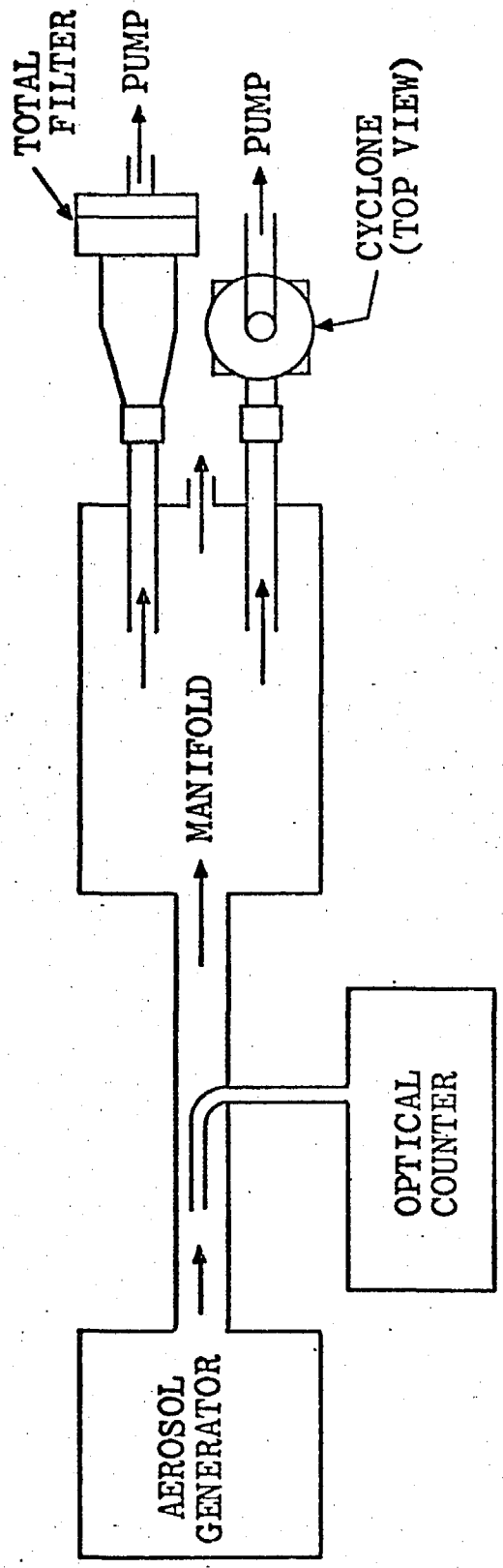

Figure 14 Arrangement for calibration of the AIHL cyclone with laboratory aerosol.

the same flow rates by the cyclone and a total filter in the symmetric arrangement shown. Checks with two total filters on the manifold yielded deposits equal to within 2% at all flow rates used. The oleic acid aerosol droplets were tagged with 1 % uranine V/V. The deposits on the 2 μm pore size Teflon membrane filters were extracted with 90% alcohol/ 10% water solvent in a sonic bath for ten minutes, 0.02 mL 1N NaOH added, and then quantitated on a fluorometer. The cyclone sampling efficiency was then calculated by dividing the uranine yield on the cyclone after filter by that on the total filter.

Measurements were made at 15.6, 23 and 55 L/min to obtain 50% cutpoints near 1.0, 2.5 and 3.5 μm. Results are plotted in Figure 15. The observed 50% cutpoints (particle diameter at 50% sampling efficiency) are replotted vs. flow rate in Figure 16. The data are fitted by $D_{50} = 44.0\ Q^{-0.90}$ where D_{50} is the 50% cutpoint in μm and the flow rate Q is in L/min. From this equation we find 50% cutpoints at 3.5, 2.5 and 1.2 μm to correspond to flow rates of 16.7, 24 and 55 L/min, respectively.

Operation at 55 L/min represents a factor of two increase in flow rate over the highest flow rate attained in the previous calibration by John and Reischl.[9] In that work it was found that all the data from 8 to 27 L/min could be plotted on a universal curve. In Figure 17 the present data at 55 L/min is plotted for comparison with the curve fitted to the previous data at lower flow rate. The good agreement again indicates that the cyclone is operating in the same flow regime at 55 L/min.

Uniformity of the Filter Deposit

Uniformity of the deposit on the after filter is important in case the filter is sectioned for chemical analysis. Also, some non-destructive methods of analysis, such as X-ray fluorescence do not sample the filter surface uniformly.

The measurements consisted of sampling uranine-tagged oleic acid aerosol, sectioning the filter and quantitating the uranine by fluorometry. For these tests the cyclone was operated at 23 L/min. A particle diameter of 1.5 μm was

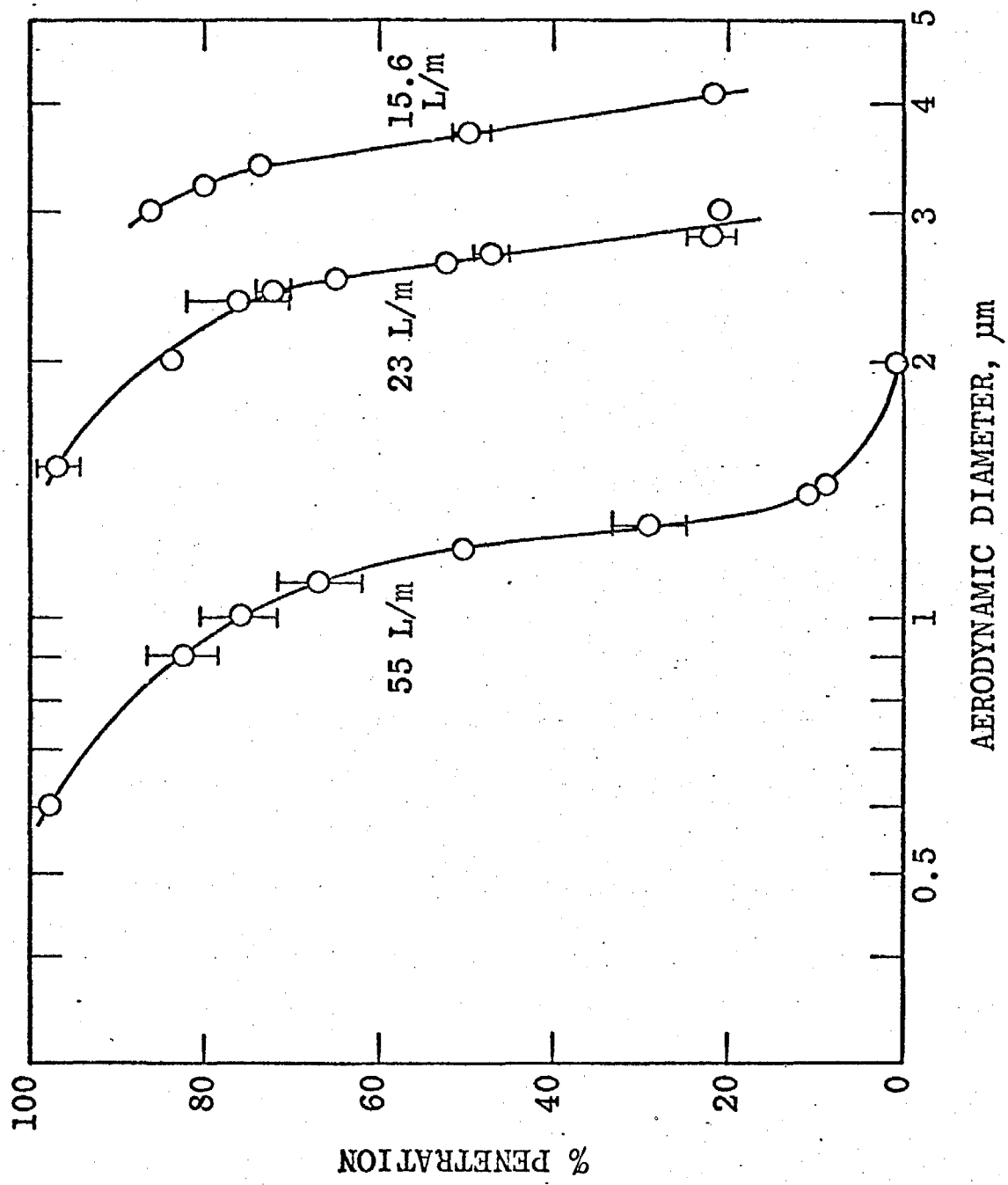

Figure 15 Sampling efficiencies of the AIHL cyclone vs. the diameter of the oleic acid particles, for three different flow rates.

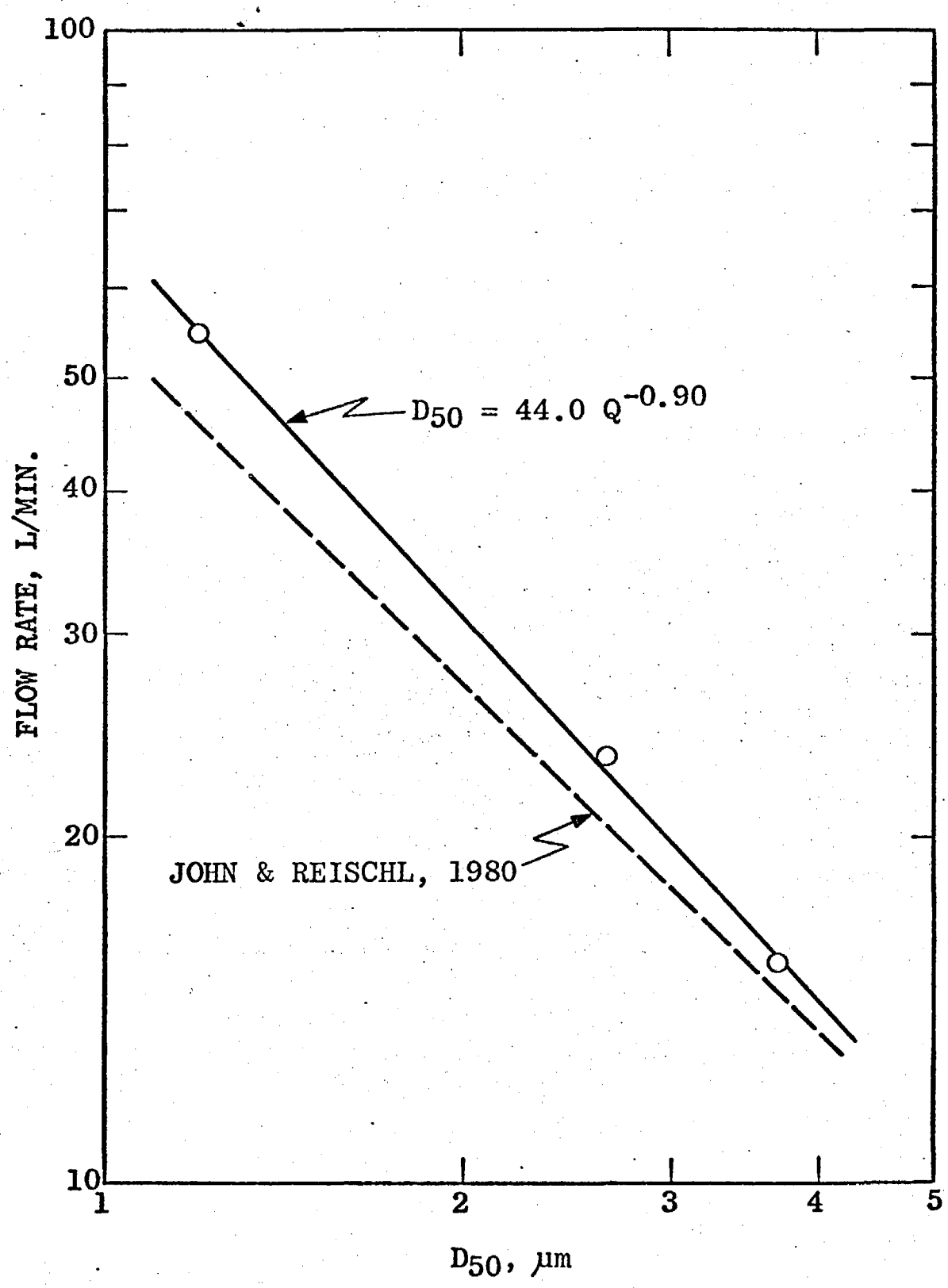

Figure 16 Variation of the 50% cut point of the AIHL cyclone with flow rate.

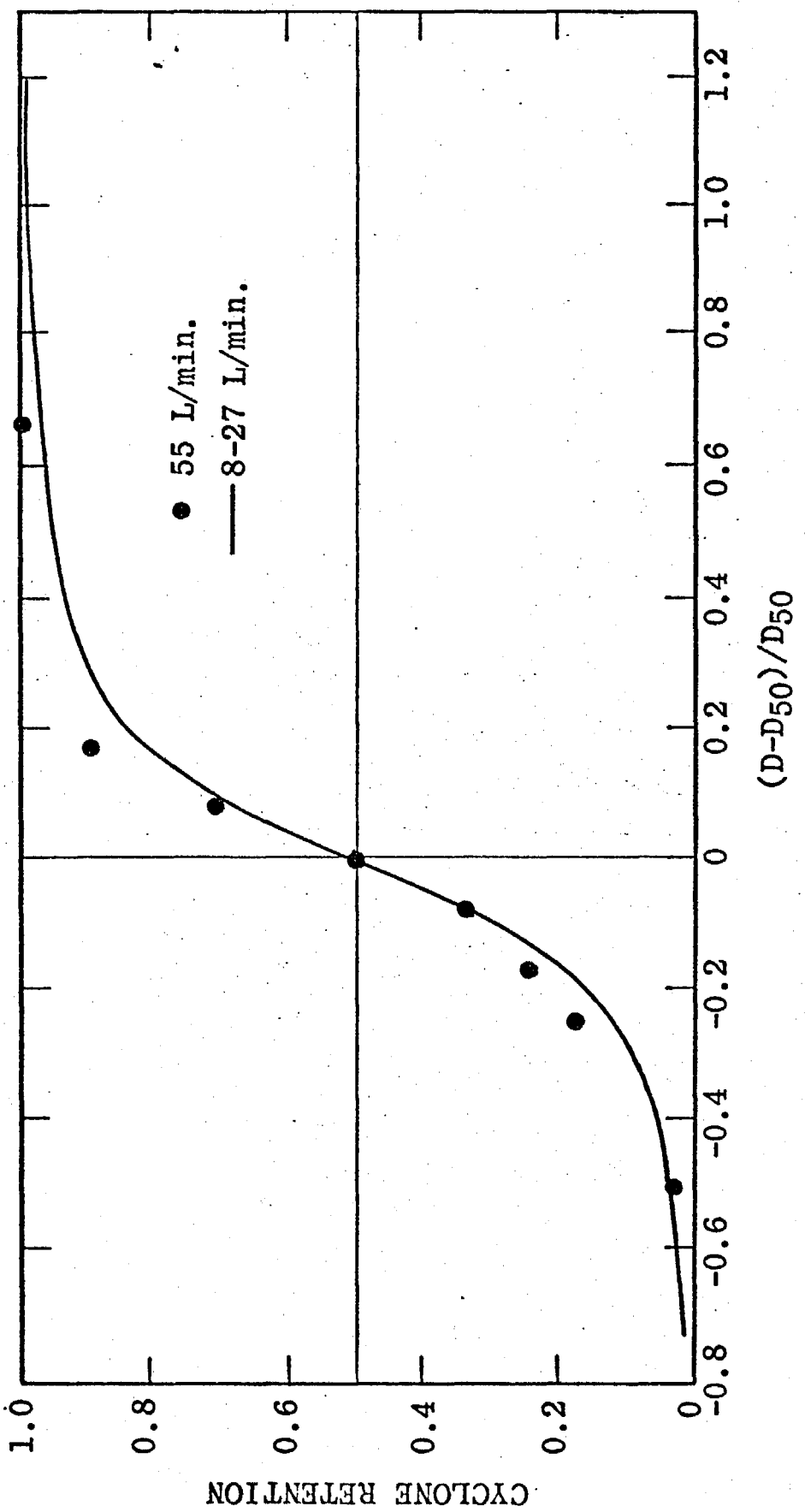

Figure 17 Universal plot of cyclone retention vs. dimensionless particle size parameter showing agreement of data at 55 L/min with that at lower flow rates.

chosen since the cyclone penetration is nearly 100% but the particles are still large enough to exhibit inertial effects, i.e., to cross streamlines.

The filters were sectioned two different ways, by quarters, and into 1 cm diameter discs, as diagrammed in Figure 18. Special filter cutters were developed, basically punches with the filters held down by vacuum. Fluoropore (Teflon membrane) filters were used since ring-mounted membranes could not be cut reproducibly. The precision of the sectioning was checked by weighing. For the quarters, the coefficient of variation (std. dev./mean) was 3.1 ± 1.5% and for the discs it was 3.4 ± 0.7%. These are small variations; however, for the uniformity runs the uranine yields were normalized to the sector weights to effectively remove the sectioning as a source of variation.

For comparison to the cyclone after filter, a total filter was also run in parallel for assessment of uniformity. The results are tabulated in Table 3. The coefficients of variation for quarters and for discs B, C, D, & E indicate a small but significant azimuthal variation on both the total filter and cyclone after filter, the precision of the fluorometry being about 1%. The data also indicate a radial non-uniformity for the total filter but not for the cyclone after filter. This may be due to the fact that the half-angle of the cone leading to the total filter was 15° whereas it is only 10° for the cyclone. The sharper bend of the streamlines would tend to concentrate particles near the center of the filter. The absence of radial variation on the cyclone filter is evidence that the vortex has been sufficiently damped in the cone leading to the filter.

For the cyclone filter, the average coefficient of variation obtained by combining the data for quarters and discs is 5.4%, which is small enough for most applications.

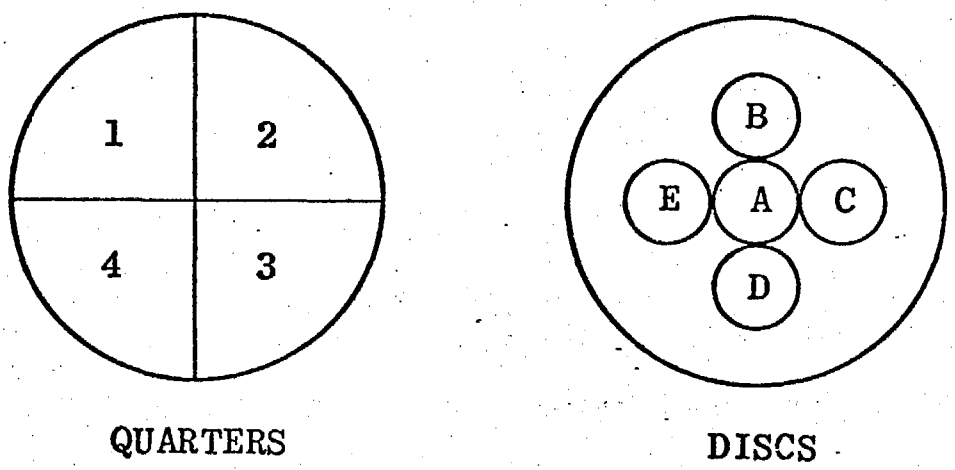

Figure 18 Diagram of sectioning of the cyclone filter for tests of the deposit uniformity.

TABLE 3

FILTER UNIFORMITY DATA FOR SECTIONING SHOWN IN FIGURE 18

The errors listed are standard deviations of three trials.

	Total Filter	Cyclone After Filter
$\left(\frac{\sigma}{x}\right)$ Ave. x 100 ,quarters	5.5 ± 0.9%	4.3 ± 0.9%
$\left(\frac{\sigma}{x}\right)$ Ave. x 100, discs B, C, D & E	8.2 ± 2.3%	7.3 ± 2.6%
$\left(\frac{\sigma}{x}\right)$ Ave. x 100, all discs	9.1 ± 1.9%	6.4 ± 2.2%
$\left[1 - \left(\frac{4A}{B + C + D + E}\right) \text{Ave.}\right] \times 100$	11 ± 10%	0 ± 2%

SUMMARY AND CONCLUSIONS

Evaluation of the Size-Selective Hi-vol

The sampling efficiency of the SSI has been measured for monodisperse DOP particles under static wind conditions. The 50% cutoff is verified to be 15 μm, and the cutoff curve is in fair agreement with wind tunnel measurements at 2 km/hr. The cutpoint is insensitive to flow rate. Particle deposits on the 8" x 10" filter are systematically 3% lower near the corners than in the center. For particle sizes below the cutpoint, non-uniformity in the aerosol cloud which is sampled results in a non-uniform deposit on the filter; however, the non-uniformity is reduced by a fcrf 3. At elevated wind speeds the aerosol effectively enters the sampler from one direction. It would be desirable to have measurements of the filter deposit uniformity for typical ambient wind speeds.

Data from John and Wall[11] show that the excess penetration of bouncy solid particles compared to liquid particles is 7 to 10% in the vicinity of the cutpoint and 3 to 4% from 35 to 60 μm aerodynamic diameter, acceptable for practical uses of the SSI.

Wind tunnel measurements by Wedding[7] and by McFarland[6] show that the variation of the 50% cutpoint with windspeed is acceptable, according to EPA criteria.

On the basis of laboratory testing, it is concluded that the SSI is a satisfactory aerosol sampler with a 50% cutpoint at 15 μm. Preliminary field results from the EPA Inhalable Particle Network are also favorable.[12] The principal remaining uncertainity concerning the suitability of the SSI for ambient monitoring is the possible error introduced by the formation of artifact sulfate and nitrate on the glass fiber filter. It may be possible to eliminate these artifacts by using quartz fiber filters.

Cyclone Modification and Testing

A new filter holder which accommodates cassette-mounted filters has been designed for the AIHL cyclone. Pressure drop vs flow rate measurements show the cyclone assembly with the new filter holder to operate in a single flow regime from 5 to 200 L/min. Sampling efficiencies were measured with monodisperse oleic acid aerosol. The 50% cutpoints at 16.7, 24 and 55 L/min are 3.5, 2.5 and 1.2 μm, respectively. The data for 55 L/min fit the same universal curve as the data at lower flow rates, indicating that the cyclone operates in essentially the same manner over the range of flow rates investigated. Deposits on the after filter were found to be uniform to within about 5% for 1.5 μm particles sampled at 23 L/min.

The new filter holder makes the use of the cyclone more convenient. The testing summarized above reconfirm the sampling characteristics of the AIHL cyclone found previously. The extension of the calibration to 55 L/min where the cutpoint is 1.2 μm facilitates the use of the cyclone for special purposes such as sampling in remote areas for correlation with visibility which requires high sampling rates. The 1.2 μm cut can be used to exclude the tail of the coarse particle mode. Field tests of the AIHL cyclone by Wendt and Torre[10] showed a correlation coefficient of 0.99 between the particulate mass from the cyclone vs the fine fraction mass from a dichotomous sampler. The AIHL cyclone has therefore performed well in both the laboratory and the field.

ACKNOWLEDGMENTS

Daniel Rogers assisted with the laboratory measurements.

REFERENCES

1. Miller, F. J., D. E. Gardner, J. A. Graham, R. E. Lee, Jr., W. E. Wilson and J. D. Bachman. J. Air Poll. Control Assoc. 29, 610-615 (1979).

2. Workshop on a California Ambient Air Quality Standard for Inhalable Particles, J. J. Wesolowski, CA/DOH/AIHL/SP 20, Air and Industrial Hygiene Laboratory, California Department of Health Services, Berkeley, CA, July 1979.

3. Aerosol Technology Committee, American Industrial Hygiene Association, Am. Ind. Hyg. Assoc. J. 31, 133-137 (1970).

4. Charleson, R. J., Environ. Sci. Technol. 3, 913-918 (1969).

5. Whitby, K. T., Atmos. Environ. 12, 135-159 (1978).

6. McFarland, A. R., unpublished.

7. Wedding, J., unpublished.

8. Ranade, M. B. and E. R. Kashdan, Critical Parameters for the Federal Reference Method for the Inhalable Particulate Standard, Final Report, Contract No. 68-02-2725, Research Triangle Institute, Research Triangle Park, NC, September 1979.

9. John, W. and G. Reischl, J. Air Poll. Control Assoc. 30, 872-876 (1980).

10. Wendt, J. G. and K. J. Torre (1981). Field Test of Four Size-Segregated Particulate Samplers. California Air Resources Board, Technical Services Division, El Monte, CA.

11. John, W. and S. Wall, unpublished.

12. Rodes, C. E., private communication.