**Executive Order**
**G-70-169-AA**

**Exhibit 2**

**Figure 2B**
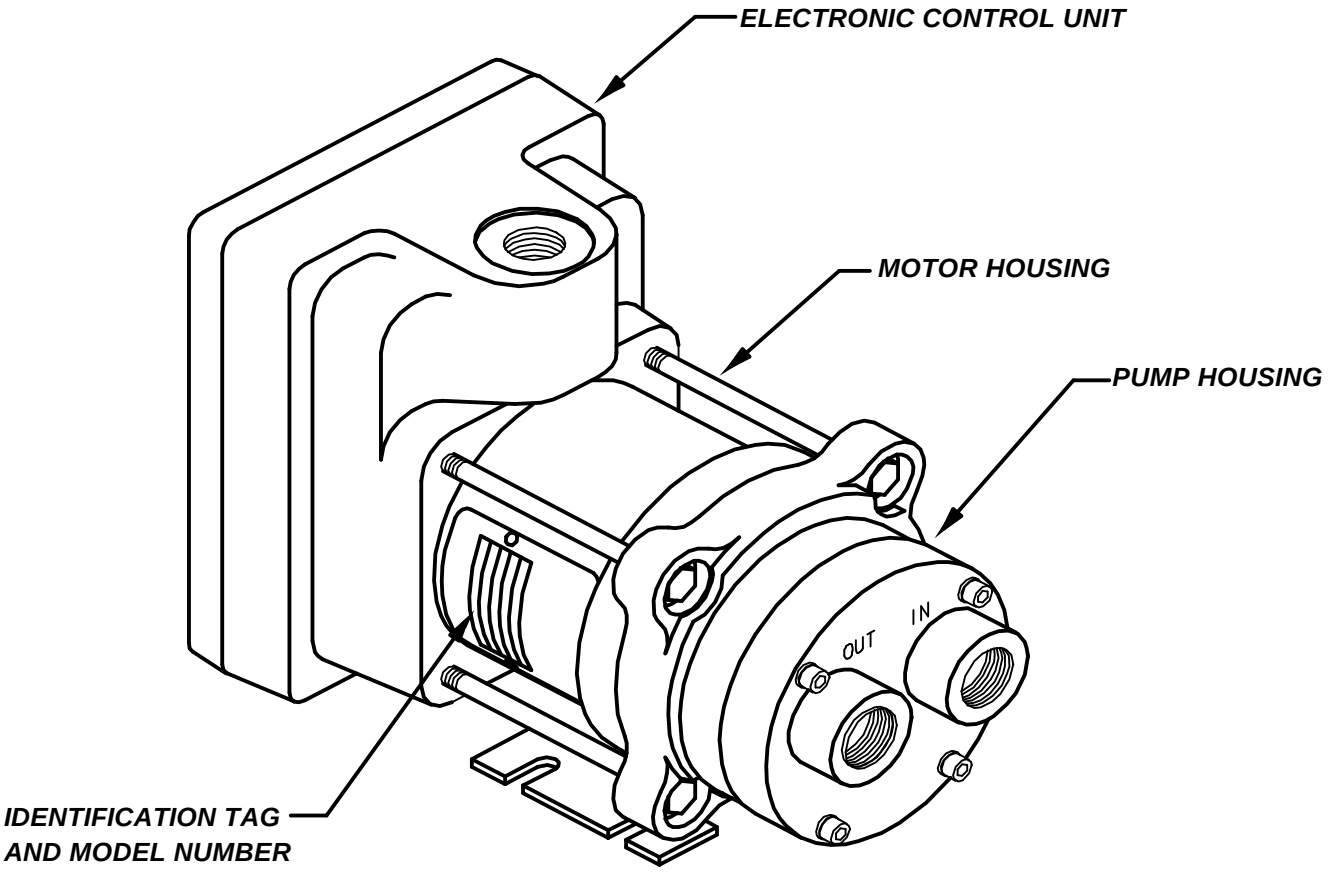
# INTELLIVAC Vapor Pump System