Interlaboratory Comparison of Ambient Air Samples

Charles L Pearson

California Air Resources Board
Quality Assurance Section
1927 13th Street
Sacramento, CA 95814

ABSTRACT

The California Air Resources Board (CARB) has developed a specialized sampling technique to collect ambient air samples that are used to evaluate the relative differences in non-methane hydrocarbon (NMHC) species among Photochemical Assessment Monitoring Station (PAMS) laboratories and toxics species amid toxics laboratories. The sampling system is engineered to simultaneously collect several ambient air samples from a site with historically high concentrations of hydrocarbon or toxics species. The specialized sampling unit is capable of filling up to 14 canisters simultaneously, with a canister being sent to each of the participating designated PAMS or toxics laboratories for analysis. Each laboratory follows their standard operating procedure in assaying the contents from the comparison check canister and reports a value for each detected compound to CARB. The laboratory responses are then tabulated and rigorous statistical tests are performed on each of the values to achieve an accurate depiction of the canisters' contents. The interlaboratory comparison check allows us to assess the variability of the measurement process using real-world samples at ambient level concentrations. This comparison check method emulates a round-robin check using a single canister, however, it does not encounter delays in canister routing between laboratory participants or experience gradual loss of pressure as the canister contents are analyzed.

The following paper explains the equipment, sampling methodology, and statistical techniques developed for the ambient air interlaboratory comparison check. This paper also details the history, as well as future applications of the interlaboratory comparison procedure.

INTRODUCTION

To evaluate the accuracy of data generated by the PAMS and toxics laboratories, CARB conducts annual interlaboratory comparison checks. The interlaboratory comparison check is one of many quality assurance tools used to assess data quality and evaluate laboratory practices. The comparison check complements the laboratory and through-the-probe audit programs by evaluating the performance of the participating laboratories relative to one another using a real-world air sample. The purpose of the laboratory comparison is to indicate general agreement or not among the laboratories, and is not

necessarily an indication of accuracy. The comparison check program was initiated in 1998 with its focus on NMHC species. A paper titled "Interlaboratory Comparison of Ambient Air Samples" was presented at the United States Environmental Protection Agency's Air and Waste Management Association Symposium in September 2000.[1] Since 2000, CARB expanded the program to support the toxics program, updated the sampling equipment to sustain additional laboratories, and enhanced the statistical analysis of the data.

The comparison is intended to support each program by evaluating the ability of each laboratory to produce consistent data from an ambient air sample in terms of the number of compounds present and their concentrations. It also enables laboratories to directly compare their responses with other laboratories located throughout the United States. The interlaboratory comparison protocol is similar to a round-robin check, with the primary difference being that each participating laboratory receives a separate canister. This comparison check procedure is more effective than a round-robin check as it does not encounter delays in canister routing between laboratory participants or experience gradual loss of pressure as the canister contents are analyzed. Since a multiple canister approach is used, the samples experience limited travel time between collection and analysis. The sampling time and location are based on historically high temporal and spatial concentrations of pollutants. Typically, the ideal sampling location and time has been a site with close proximity to freeways during early morning hours to capture commute patterns.

Once the samples are collected, each laboratory conducts a minimum of two analyses from the canister contents using a gas chromatograph (GC) to determine the compounds present and their concentrations. Each laboratory reports its results to CARB. CARB in turn tabulates the responses and calculates the mean and standard deviation for each compound. Using the mean and standard deviation, upper and lower critical values are established to identify outliers in the data set. Responses that exceed either critical value are eliminated and an adjusted mean and standard deviation are then calculated. Each individual laboratory response is compared against the adjusted mean and standard deviation. The laboratories are notified of any response that differs more than two standard deviations from the adjusted mean response.

SAMPLING PROCEDURE

Background

Each participating laboratory is required to provide one clean, evacuated, 6-liter stainless steel canister. One laboratory is asked to provide two canisters and they are requested to analyze both cans to verify the precision of the collection procedure. The sample canisters from all laboratories are simultaneously filled using a modified canister sampler with ambient air over a three-hour period. The three-hour sampling period ensures that a representative sample is collected. Following sample collection, the canisters are

returned to their respective laboratories for GC analysis. Results from the analyses are then forwarded to CARB, which compiles the results and performs an assortment of statistical calculations on each of the reported values. The compiled results, in tabular and graphical form, are distributed to each participating laboratory.

Equipment

A specialized RM Environmental Systems Inc. (RMESI) 910A™ canister sampler is equipped with a larger stainless steel pump, with Viton rings, as well as, a 2000 cubic centimeters per minute (cc/min) mass flow controller (MFC) to supply the increased flow required when filling numerous canisters. A custom built manifold was constructed to accept up to fourteen, 6-liter sampling canisters to be filled from the sampler's single inlet port. The collection probe inlet consists of ¼ inch stainless steel tubing, with ⅛ inch stainless lines supplying the sample to each of the canisters. Certified temperature, pressure and RH sensors are used to record ambient meteorological data.

Pre-Sample Cleaning

All sampling equipment, including the probe inlet and external presentation lines, are cleaned prior to sampling by flushing the entire system using zero air and ultrapure nitrogen. Zero air is passed through the system for a minimum of eight hours, followed by an ultrapure nitrogen purge for three hours. Once the three-hour nitrogen purge is complete, a certified clean, evacuated canister is connected to one of the sampler's output lines. The sampler is then allowed to draw in ultrapure nitrogen until the canister reaches a pressure between 12-14 psig. The sample canister is analyzed to insure that no contamination exists in the sampling system. If the analysis results indicate contamination, the system purge must be repeated. Once the sampling system cleanliness has been certified, all sampler ports and lines are capped to maintain an uncontaminated system. Each participating laboratory is required to submit one or two certified clean canisters following their normal canister cleaning procedure. CARB also requests documentation of the cleanliness of their canister. Since canister cleanliness represents a variable in the comparison check procedure, the comparison also serves as an indirect check of the canister cleaning process.

System Set-up

Once the sample site is selected, the sample probe inlet is situated in the same position as the probe routinely used at the station for sampling. The inlet probe to the sampler is connected to a ¼ inch stainless steel probe line. The sample canisters are then connected to the sampler outlet ports using ⅛ inch stainless steel tubing. Figure 1 illustrates a schematic of the system set-up. Prior to sample collection, a leak-free sampling system must be achieved. To perform the required leak check, the valve on one canister is opened, causing the gauge on the sampler to register a vacuum approximately equal to that of the opened canister, the valve is then immediately closed. If the system has maintained the initial vacuum after 15 minutes, the system is considered to be leak-free. If the system does not hold vacuum for the 15 minute period, the canister fittings and their associated connections are re-tightened and the leak check is performed again. The sampling unit's flow rate setting is determined by using the following equation. Using

Equation 1, the sampler's flow rate for filling 14 canisters in 3 hours, each with a final pressure of 2 atmospheres, should be adjusted to 933 cc/min.[2]

$$F = N\,[(P)\,(V)] / (T) \qquad \text{[Equation 1]}$$

$$F = 14\,[(2\text{ atm}) \times (6000\text{ cc/atm})] / (180\text{ min})$$

Where:
F = flow rate, in cubic centimeters per minute (cc/min)
N = number of canisters
P = final canister pressure, in atmospheres absolute (atm)
V = volume of sample canister, in cubic centimeters (cc)
T = desired sampling time, in minutes (min)

Figure 1. Sampling System Set-up

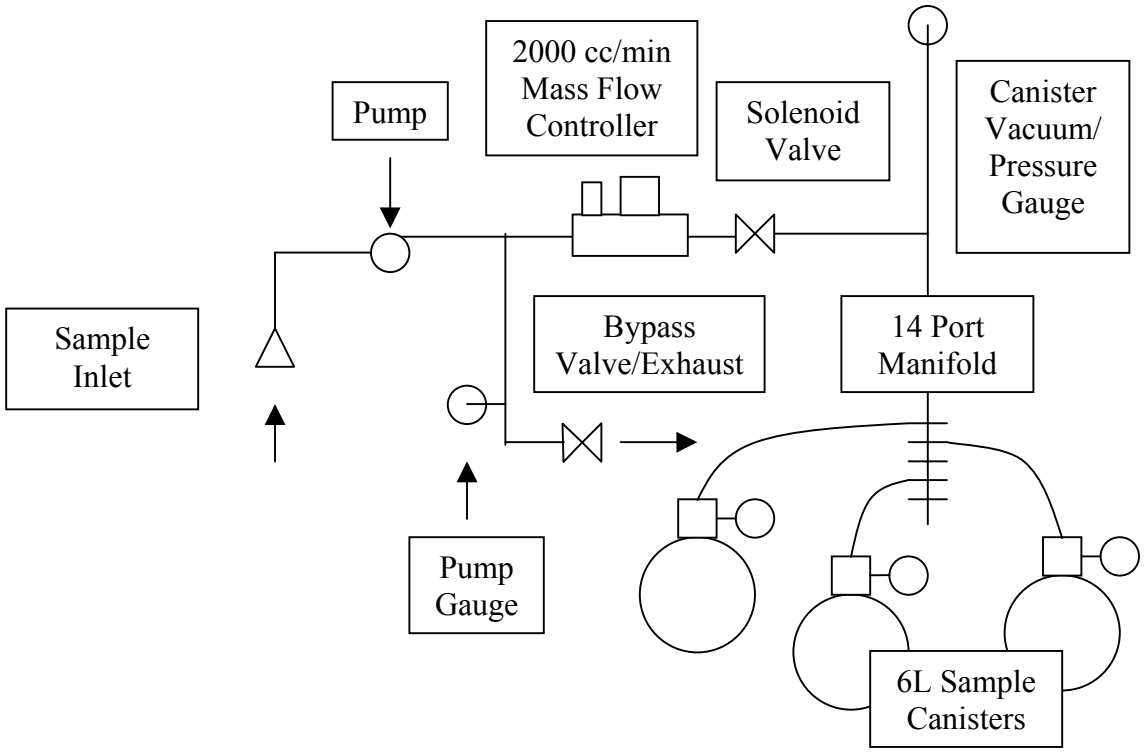

Sample Collection

Once the sampling unit is energized and prior to the start of sampling, the unit has a required 30-minute internal air purge. During this time all canister valves are opened and each canisters pre-sample vacuum is recorded. Once the internal air purge is complete, a solenoid actuates which allows airflow to run through the entire manifold and to the canisters. When the canister pressures reach approximately 14 psig, the canister valves are closed and the sampler power turned off. The canisters are then removed from the sample lines, capped, and stored properly. The filled canisters are then returned to their respective laboratories for analysis.

Results

Following their established standard operating procedures, each laboratory conducts a minimum of two analyses from their canister and reports its results, which includes the average for each detected species. Additionally, each laboratory must indicate the limit of detection of their instrument. After CARB has received each laboratory's results, the data are reviewed to detect any probable anomalies. Any response that appears to be a possible abnormality is flagged. All flagged data are confirmed with the reporting laboratory. The data are then tabulated and the average concentration and standard deviation for each compound are calculated. To eliminate atypical, infrequent values (outliers) from being included in the statistical calculations, upper and lower critical values are established. The critical values are based upon the probability that 80% of these values will fall within this range (two-tailed test). [3] All laboratory responses that exceed the upper or lower critical value are not included in the adjusted mean or standard deviation calculation. Prior to using critical values to determine outliers, the data analysis used a standard range for determining an adjusted mean, which created bias in responses with low concentrations. Since critical values are calculated directly from each compound's average and standard deviation, the adjusted mean and standard deviation are more accurately represented. By applying Equation 2, the critical values for each compound are calculated and established.

$$\text{Upper Critical Value} = \text{St Dev} \times 1.28 + \text{Mean} \qquad \text{[Equation 2]}$$
$$\text{Lower Critical Value} = \text{St Dev} \times 1.28 - \text{Mean}$$

Where: St Dev = standard deviation of all responses for each compound
Mean = mean of all responses for each compound, in ppb

Each laboratory response is then compared against the adjusted mean response. The results are compiled in a table that includes the mean, standard deviation, adjusted mean, adjusted standard deviation, and critical values for each target compound (Table 1). Graphs are generated depicting each laboratory response for each compound with the adjusted mean response for all laboratories, as well as, graphs displaying all laboratory responses (Figures 2 and 3). Prior to 2003, the graph plot error bars indicated a range of +/-20% from the adjusted mean response to illustrate laboratory performance. This approach created bias in compounds with low mean concentrations. To achieve a more accurate portrayal of laboratory performance, CARB implemented error bars using +/-2 standard deviations from the adjusted mean for each compound. The table and graph plots allow each laboratory to compare its responses to the responses from all other participants. The purpose of the laboratory comparison is to indicate general agreement or not among the laboratories, and is not necessarily an indication of accuracy. Each laboratory receives a result letter that explains the interlaboratory comparison process and details all reported responses that differ more than two standard deviations from the adjusted mean response for any given compound.

CONCLUSION

The ambient air interlaboratory comparison check program has steadily progressed since its inception. CARB has improved the program by updating and utilizing superior equipment, expanding participation, and making the results more useful for its participants. In 1998, the first comparison check was conducted with a few California laboratories using a sampler built by CARB staff with compression fittings and stainless steel tubing. The early comparisons had a small sample size and included limited data and statistical analysis. Implementing a new sampler with greater capability has allowed CARB to vastly increase the number of laboratory participants. Presently, the comparison has expanded to include up to 14 laboratories with locations nationwide. The use of greater statistical methods improves the results and allows each laboratory to see how they compare with others when assaying ambient air. CARB is continuously striving to improve the comparison with future improvements and developments. Some of the future improvements may include increasing the sampler flow capability and sampling ports potential, initializing interlaboratory comparison checks within other programs, and investigating the possibility of introducing a NIST certified tracer compound into the sampling stream.

REFERENCES

1. Webster S. Tasat and Eric V. Albright; "Interlaboratory Comparison of Ambient Air Samples", Presented at the U.S. EPA/Air & Waste Management Association International Symposium on the Measurement of Toxic and Related Air Pollutants, Research Triangle Park, North Carolina, September 12-14, 2000.

2. "Compendium of Methods for the Determination of Toxic Organic Compounds in Ambient Air: Method TO-15, Second Edition", U.S. Environmental Protection Agency, Cincinnati, OH, EPA/625/R-96/010b, January 1997.

3. Trudy A. Watt, "Introductory Statistics for Biology Students 2nd Edition", Chapmann and Hall/CRC, Boca Raton, Florida, 1997

Table 1.

2004 Ambient Air Toxics Laboratory Comparison Check

Compound	Lab 1 (ppbv)	Lab 2 (ppbv)	Lab 3a (ppbv)	Lab 3b (ppbv)	Lab 4 (ppbv)	Lab 5 (ppbv)	Lab 6 (ppbv)	Lab 7 (ppbv)	Lab 8 (ppbv)	Lab 9 (ppbv)	Lab 10 (ppbv)	Lab 11 (ppbv)	Lab 12a (ppbv)	Lab 12b (ppbv)	Lab 12c (ppbv)	Lab 12d (ppbv)	Lab 12 Avg (ppbv)	Total	Mean	St Dev	Lower Critical Value	Upper Critical Value	Adj Mean	St Dev of Adj Mean	St Dev from Adj Mean	
																									-2 SD	+2 SD
1,4-dichlorobenzene	--	0.07	--	--	0.03	0.04	0.04	0.03	--	--	--	--	--	--	--	--	--	0.21	0.04	0.02	0.02	0.06	0.04	0.01	0.02	0.06
1,1,1-trichloroethane	--	0.04	--	--	0.03	--	0.02	0.02	--	--	--	0.03	0.03	0.03	0.03	0.03	0.03	0.14	0.03	0.01	0.02	0.04	0.03	0.01	0.01	0.05
1,3-butadiene	--	--	--	--	0.02	--	0.02	0.04	--	--	0.03	0.03	--	--	--	--	--	0.11	0.03	0.01	0.02	0.04	0.03	0.01	0.01	0.05
carbon tetrachloride	--	0.11	0.08	0.08	0.08	0.16	0.08	0.07	--	--	0.10	0.10	0.13	0.14	0.13	0.14	0.14	1.00	0.10	0.03	0.06	0.14	0.09	0.02	0.05	0.13
chloroform	--	0.04	--	--	0.03	0.06	0.03	0.03	--	--	0.06	0.02	0.04	0.04	0.04	0.03	0.04	0.30	0.04	0.01	0.02	0.06	0.04	0.01	0.02	0.06
1,3,5-trimethylbenzene	--	0.03	--	--	0.08	0.13	0.07	0.05	--	--	--	--	--	--	--	--	--	0.36	0.07	0.04	0.02	0.12	0.06	0.02	0.02	0.10
trichlorotrifluoroethane	--	--	--	--	0.08	0.15	--	--	--	--	--	0.08	--	--	--	--	--	0.31	0.10	0.04	0.05	0.16	0.10	0.04	0.02	0.18
trichloroethylene	--	0.03	--	--	0.02	--	0.02	0.02	--	--	0.01	0.02	0.03	0.03	0.03	0.03	0.03	0.13	0.02	0.01	0.01	0.03	0.02	0.01	0.00	0.04
styrene	--	0.03	--	--	0.04	0.07	0.04	0.03	--	--	0.05	--	--	--	--	--	--	0.26	0.04	0.02	0.02	0.06	0.04	0.01	0.02	0.06
tetrachloroethylene	--	0.09	--	--	0.08	0.13	0.09	0.07	--	--	0.05	0.09	--	--	--	--	--	0.60	0.09	0.02	0.05	0.12	0.08	0.02	0.04	0.12
bromomethane	--	0.04	--	--	0.02	--	--	0.03	--	--	--	--	--	--	--	--	--	0.09	0.03	0.01	0.02	0.04	0.03	0.01	0.01	0.05
dichlorodifluoromethane	0.60	0.62	--	--	0.56	1.13	--	--	0.54	0.60	0.64	--	--	--	--	--	--	4.69	0.67	0.21	0.41	0.93	0.59	0.04	0.51	0.67
o-xylene	--	0.16	0.13	0.19	0.20	0.38	0.22	0.13	0.16	0.16	0.20	0.20	0.21	0.19	0.22	0.20	0.21	2.34	0.19	0.07	0.11	0.28	0.18	0.03	0.12	0.24
chloromethane	0.60	0.49	--	--	0.53	0.93	0.58	0.49	0.55	0.56	--	--	--	--	--	--	--	4.73	0.59	0.14	0.41	0.77	0.54	0.04	0.46	0.62
benzene	--	0.40	0.38	0.32	0.34	0.74	0.37	0.30	0.29	0.36	0.37	0.40	0.33	0.37	0.34	0.38	0.36	4.63	0.39	0.12	0.24	0.54	0.35	0.04	0.27	0.43
dichloromethane	0.60	0.66	0.52	0.54	0.59	0.98	0.59	--	0.73	0.63	0.91	0.70	0.64	0.61	0.63	0.59	0.62	8.07	0.67	0.14	0.49	0.85	0.62	0.07	0.48	0.76
trichlorofluoromethane	--	0.30	--	--	0.29	0.55	--	--	0.30	0.31	0.23	0.26	--	--	--	--	--	2.24	0.32	0.11	0.19	0.45	0.28	0.03	0.22	0.34
ethylbenzene	--	0.18	0.17	0.13	0.16	0.32	0.21	0.12	0.15	0.16	0.22	0.15	--	--	0.20	--	0.20	2.17	0.18	0.05	0.11	0.25	0.17	0.03	0.11	0.23
m/p-xylene	--	0.30	0.65	0.48	0.47	0.75	0.55	0.34	0.34	0.35	0.67	0.40	0.50	0.47	0.57	0.51	0.51	5.82	0.48	0.15	0.30	0.67	0.46	0.13	0.20	0.72
propylene	--	--	--	--	--	0.75	0.42	--	--	--	--	--	--	--	--	--	--	1.17	0.59	0.23	0.29	0.88	0.59	0.23	0.13	1.05
1,2,4-trimethylbenzene	--	0.09	--	--	0.32	0.41	0.29	0.23	0.22	0.16	0.29	--	--	--	--	--	--	2.01	0.25	0.10	0.12	0.38	0.23	0.08	0.07	0.39
methyl ethyl ketone	--	1.33	1.25	0.98	--	2.01	1.05	--	0.87	--	--	0.80	--	--	--	--	--	8.29	1.18	0.41	0.66	1.71	1.05	0.21	0.63	1.47
toluene	2.80	1.82	2.41	2.25	2.50	4.24	2.40	2.61	2.40	2.34	3.20	1.90	2.46	2.41	2.47	2.50	2.46	33.33	2.56	0.61	1.78	3.35	2.42	0.36	1.70	3.14

Note:

(1) -- = Not reported.

(2) = Not included in statistical calculations at laboratory's request

(3) = Responses exceeded the upper or lower critical value and were not included in the adjusted mean or standard deviation.

(4) The lower and upper critical values were established to exclude outliers when comparing all laboratory responses.

For each compound:

Lower critical value = St Dev X 1.28 - mean

Upper critical value = St Dev X 1.28 + mean

(5) Labs 1, 2, 6 and 12 reported values were adjusted to two significant figures.

(6) Lab 3a and 3b were two separate canisters analyzed by two different instruments.

(7) Lab 12 analyzed collocated canisters with two different instruments, the average value was used for statistical calculations.

Figure 2.

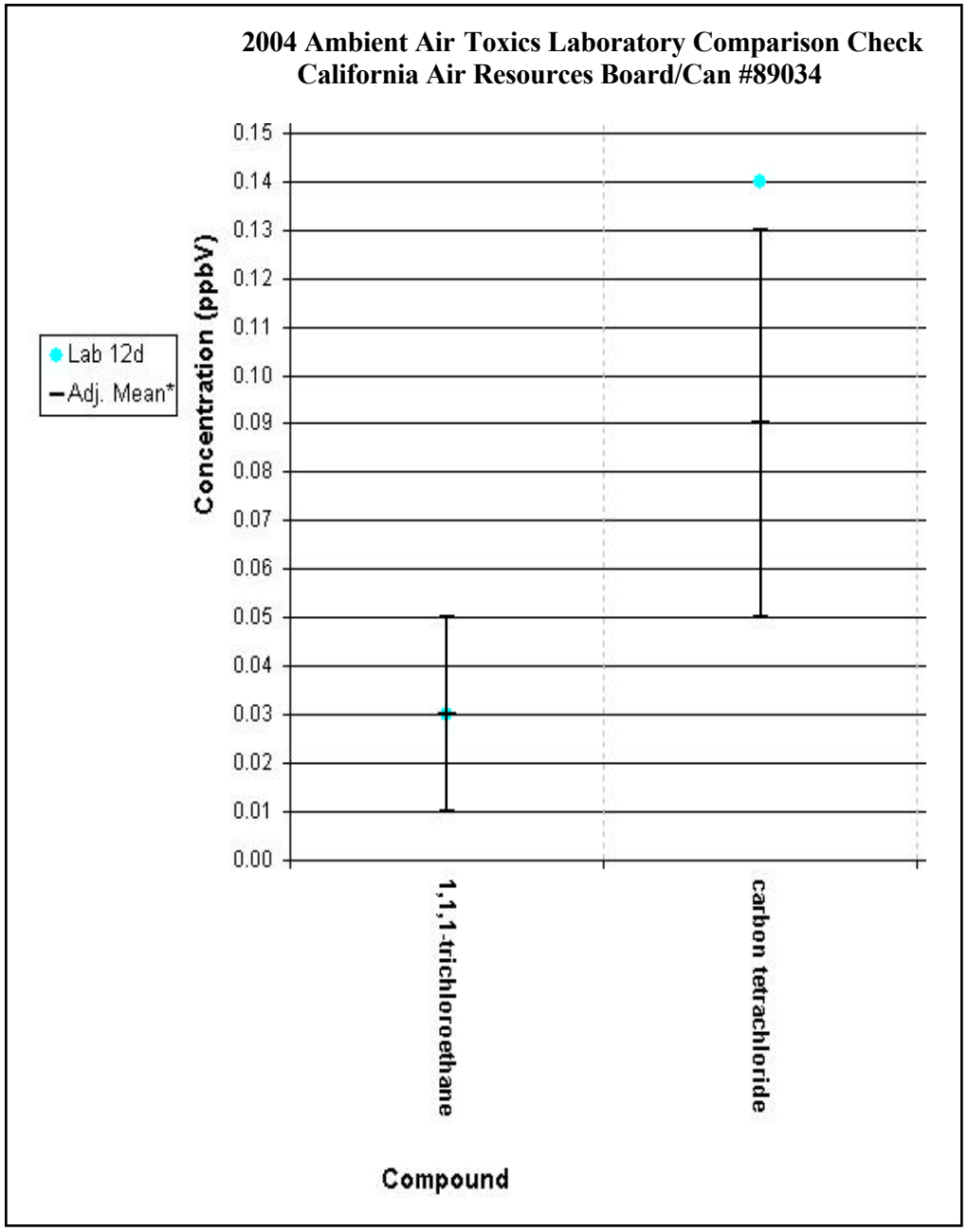
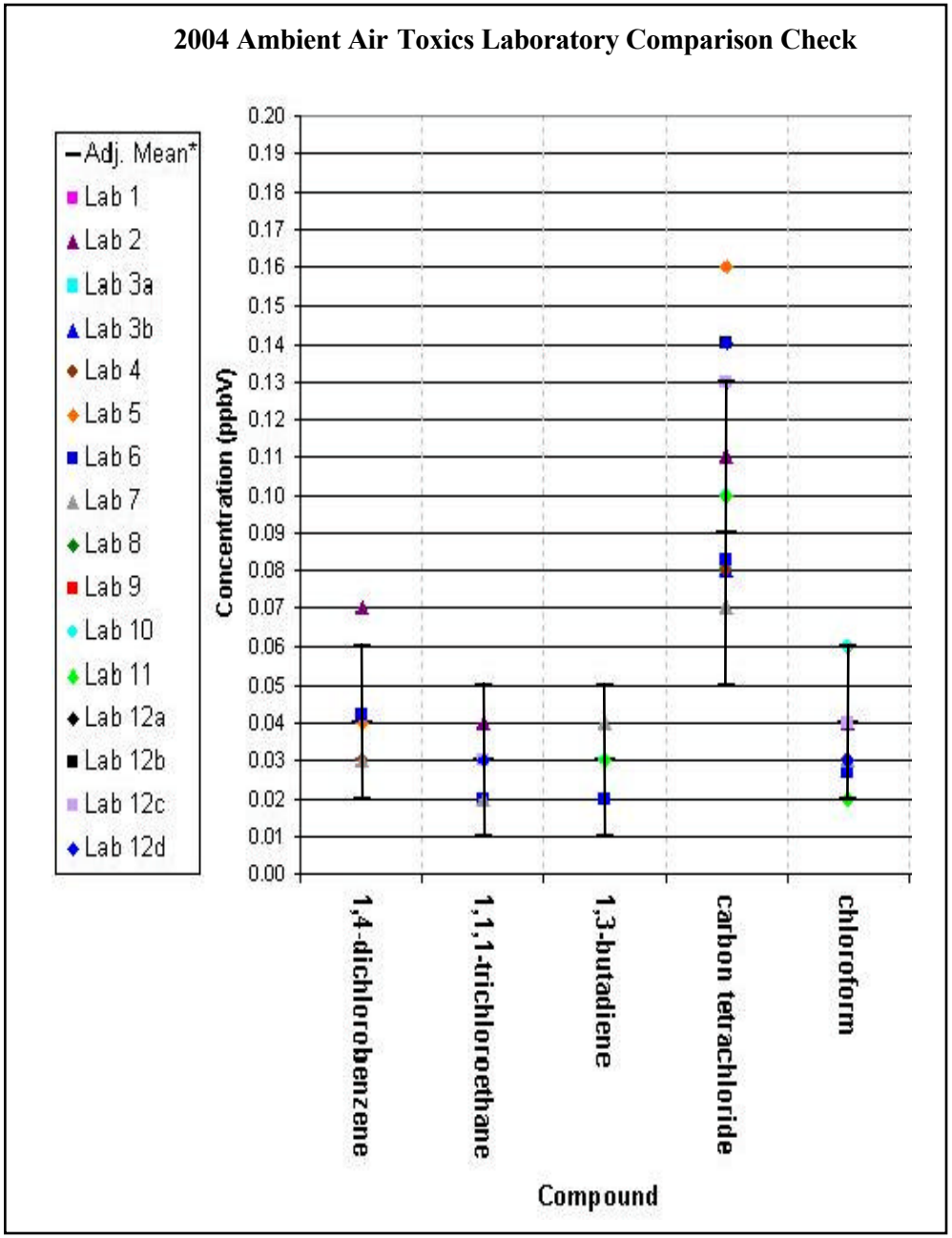
Figure 3.