APPENDIX B

CYLINDER HEAD MODIFICATION DRAWINGS

APPLICATION		REVISIONS			
NEXT ASSY.	USED ON	REV.	DESCRIPTION	DATE	APPROVED

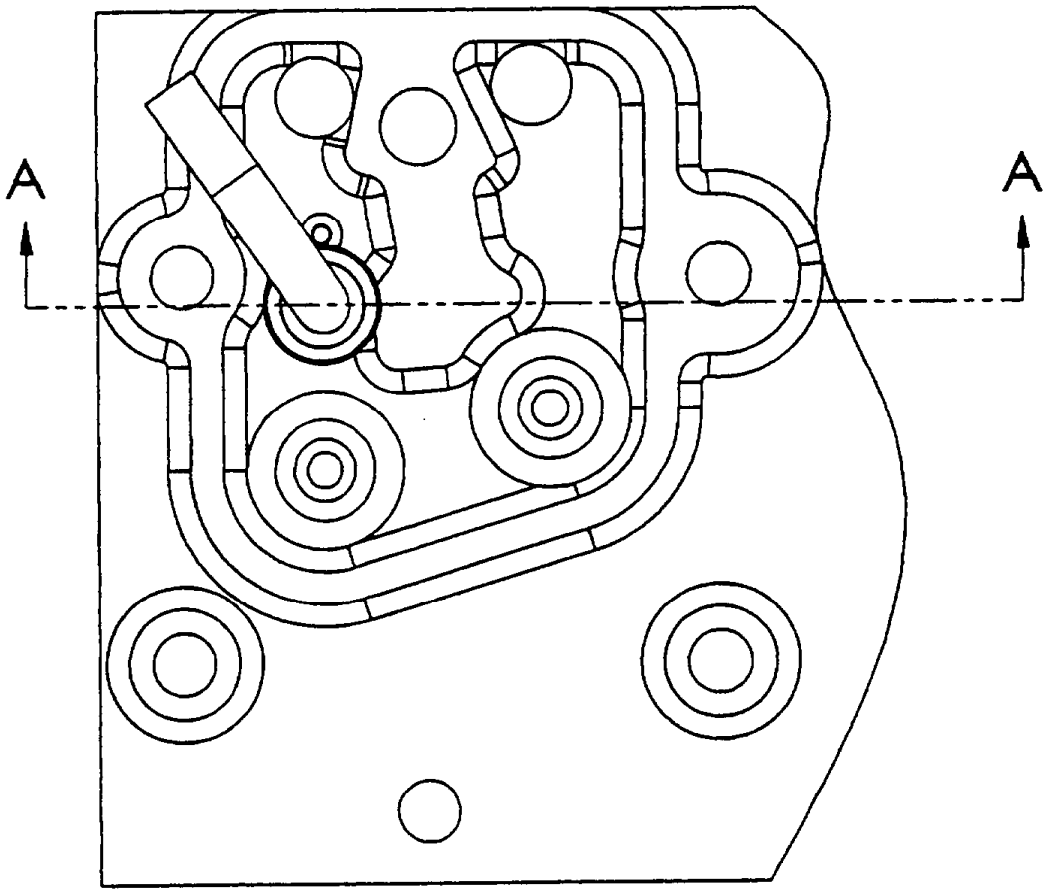

Top View

UNLESS OTHERWISE SPECIFIED DIMENSIONS ARE IN INCHES. TOLERANCES ARE: DECIMALS .XX ± .02 .XXX ± .005 ANGLES ±5°	CONTRACT NO.		**Southwest Research Institute** *6220 Culebra Rd., San Antonio, Tx 78238*
	APPROVALS	DATE	TITLE Cylinder Head Assembly Shown With Transducer Hardware Installed
	DRAWN Evan S. Guy	11/27/98	
MATERIAL	CHECKED Richard J. Branecky RB		
	ENGR. David P. Meyers DM		SIZE A / DWG. NO. 2369-1 / REV.
FINISH	ISSUED		
DO NOT SCALE DRAWING			SCALE 2:3 / SHEET 1 of 3

03-2369-104

APPLICATION		REVISIONS			
NEXT ASSY.	USED ON	REV.	DESCRIPTION	DATE	APPROVED

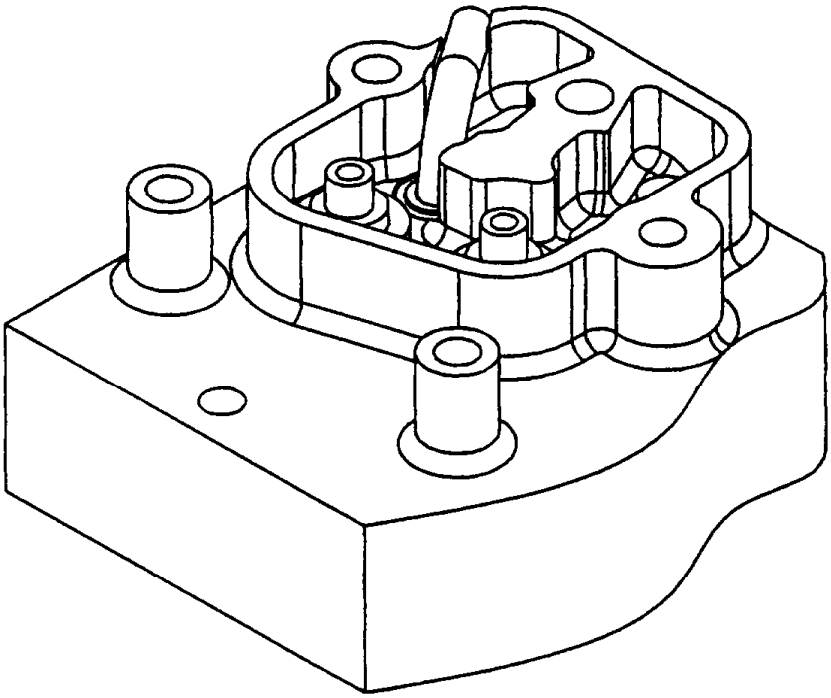

Isometric View

UNLESS OTHERWISE SPECIFIED DIMENSIONS ARE IN INCHES. TOLERANCES ARE:	CONTRACT NO.	**Southwest Research Institute** *6220 Culebra Rd., San Antonio, Tx 78238*	
DECIMALS .XX ± .02 .XXX ± .005 ANGLES ±.5°	APPROVALS / DATE	TITLE Cylinder Head Assembly Shown With Transducer Hardware Installed	
	DRAWN Evan S. Guy 11/27/98		
MATERIAL	CHECKED Richard J. Branecky RJB		
	ENGR. David P. Meyers DPM	SIZE A	DWG. NO. 2369-2 / REV.
FINISH	ISSUED		
DO NOT SCALE DRAWING		SCALE 1:2	SHEET 2 of 3

03-2369-104

APPLICATION		REVISIONS			
NEXT ASSY.	USED ON	REV.	DESCRIPTION	DATE	APPROVED

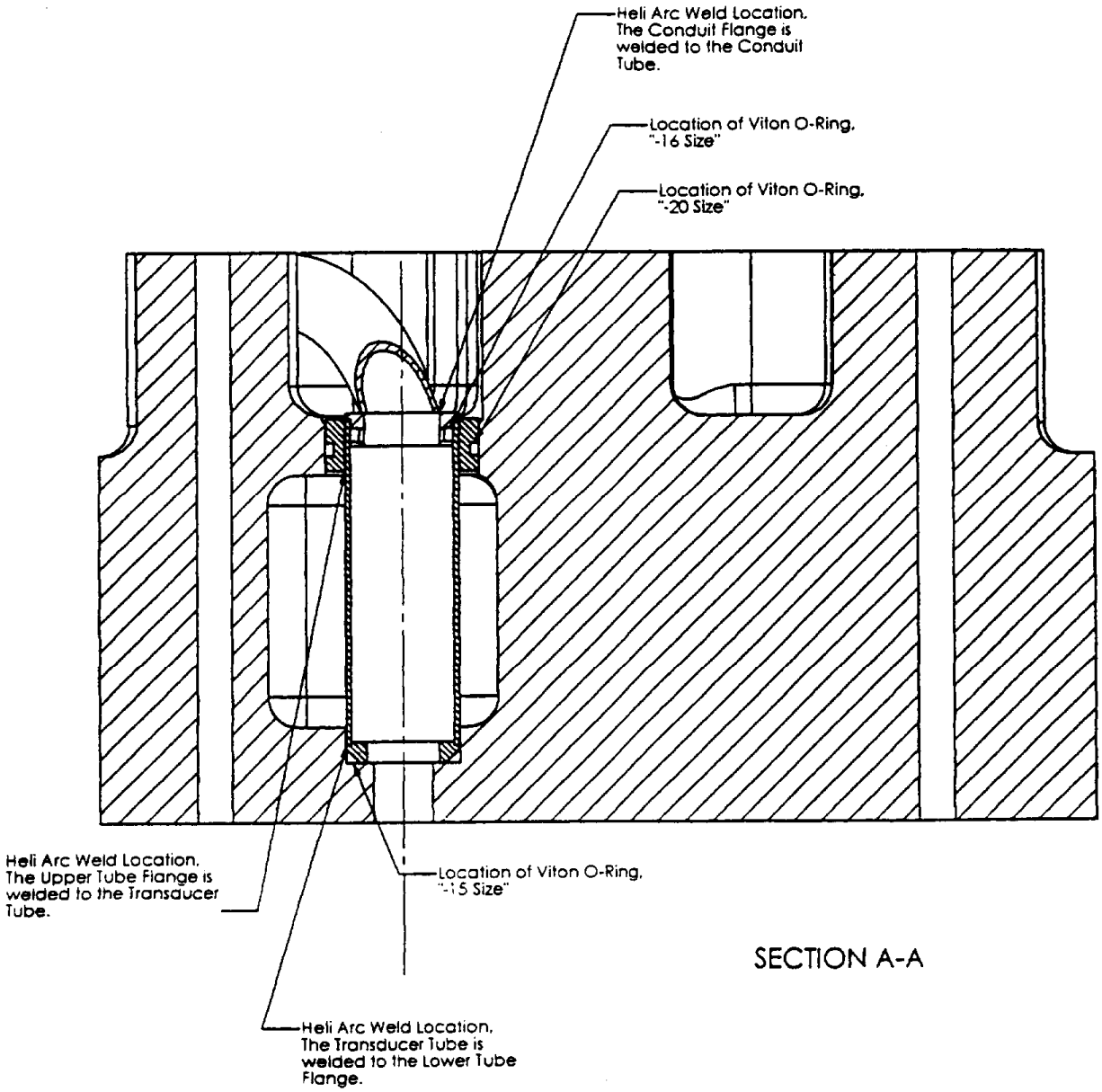

SECTION A-A

UNLESS OTHERWISE SPECIFIED DIMENSIONS ARE IN INCHES. TOLERANCES ARE: DECIMALS .XX ±.02 .XXX ± .005 ANGLES ±.5°	CONTRACT NO.		**Southwest Research Institute** *6220 Culebra Rd., San Antonio, Tx 78238*
	APPROVALS	DATE	TITLE Cylinder Head Assembly Shown With Transducer Hardware Installed
	DRAWN Evan S. Guy	11/27/98	
MATERIAL	CHECKED Richard J. Branecky		
	ENGR. David P. Meyers		SIZE A / DWG. NO. 2369-3 / REV.
FINISH	ISSUED		
DO NOT SCALE DRAWING			SCALE 1:1 / SHEET 3 of 3

03-2369-104

APPLICATION		REVISIONS			
NEXT ASSY.	USED ON	REV.	DESCRIPTION	DATE	APPROVED

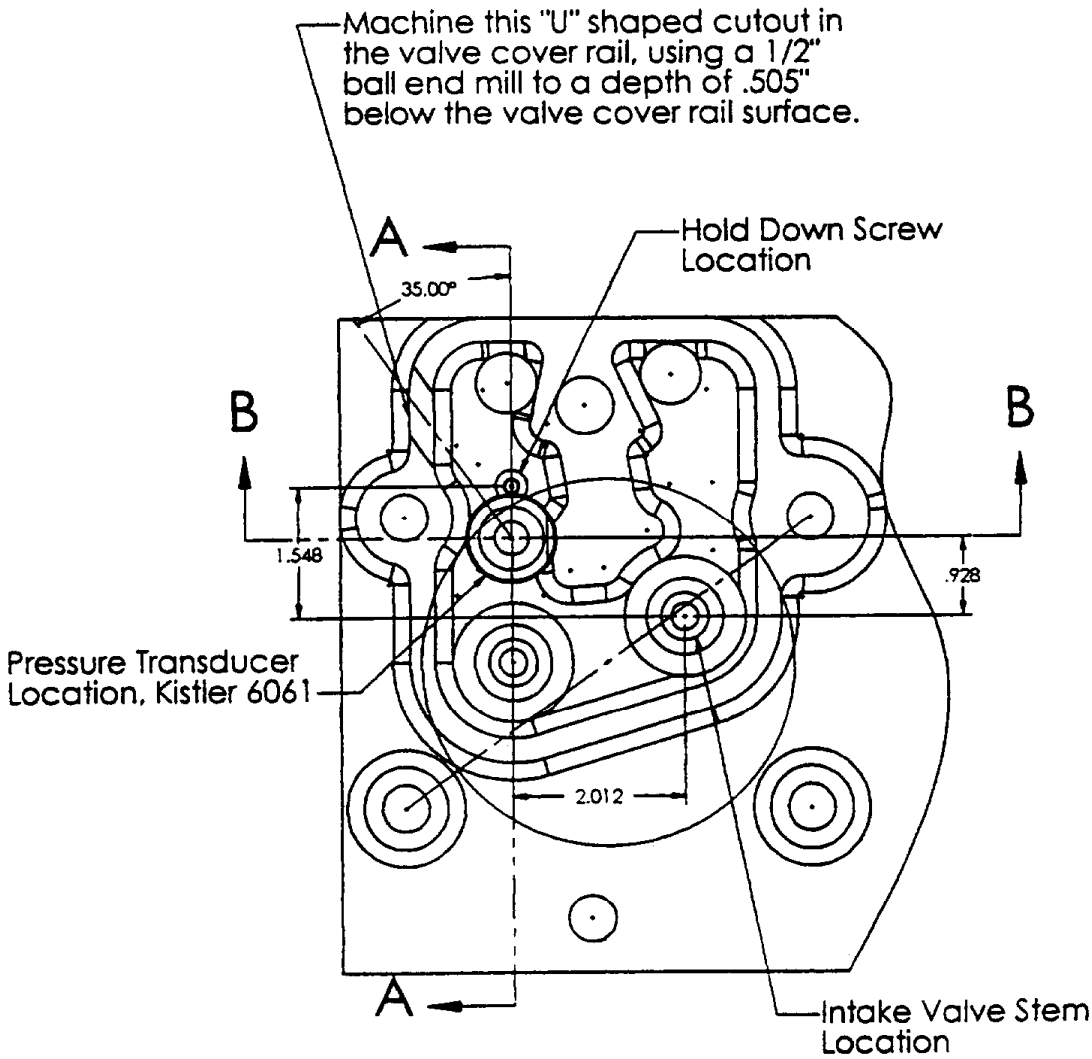

UNLESS OTHERWISE SPECIFIED DIMENSIONS ARE IN INCHES. TOLERANCES ARE: DECIMALS .XX ± .02 .XXX ± .005 ANGLES ±5°	CONTRACT NO.		**Southwest Research Institute** 6220 Culebra Rd., San Antonio, Tx 78238
	APPROVALS	DATE	TITLE Cylinder Head, #6 End Detail, Pressure Transducer Installation, Cummins 6B Gas Engine
	DRAWN Evan S. Guy	11/27/98	
MATERIAL	CHECKED Richard J. Branecky RB		
	ENGR. David P. Meyers DM		SIZE A / DWG. NO. 2369-4 / REV.
FINISH	ISSUED		
DO NOT SCALE DRAWING			SCALE 1:2 / SHEET 1 of 3

03-2369-104

APPLICATION		REVISIONS			
NEXT ASSY.	USED ON	REV.	DESCRIPTION	DATE	APPROVED

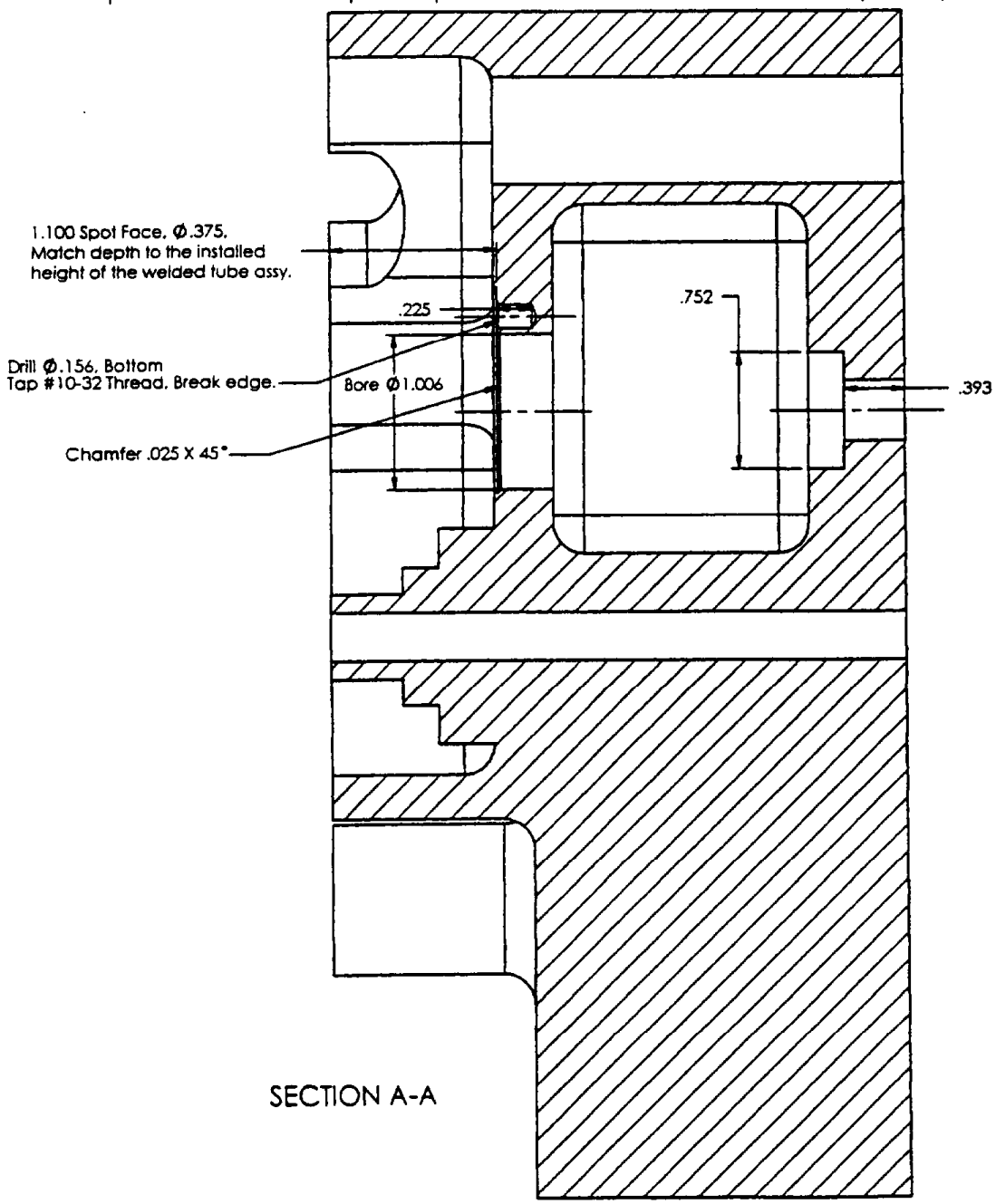

SECTION A-A

UNLESS OTHERWISE SPECIFIED DIMENSIONS ARE IN INCHES. TOLERANCES ARE: DECIMALS .XX ± .02 .XXX ± .005 ANGLES ±.5°	CONTRACT NO.		**Southwest Research Institute** 6220 Culebra Rd., San Antonio, Tx 78238
	APPROVALS	DATE	TITLE Cylinder Head, #6 End Detail, Pressure Transducer Installation, Cummins 6B Gas Engine
MATERIAL	DRAWN Evan S. Guy	11/27/98	
	CHECKED Richard J. Branecky RB		
	ENGR. David P. Meyers DM		SIZE A / DWG. NO. 2369-5 / REV.
FINISH	ISSUED		
DO NOT SCALE DRAWING			SCALE 1:1 / SHEET 2 of 3

03-2369-104

APPLICATION		REVISIONS			
NEXT ASSY.	USED ON	REV.	DESCRIPTION	DATE	APPROVED

Machined cutout for the 1/2" stainless steel tube

Isometric view of the #6 cylinder portion of the cylinder head.

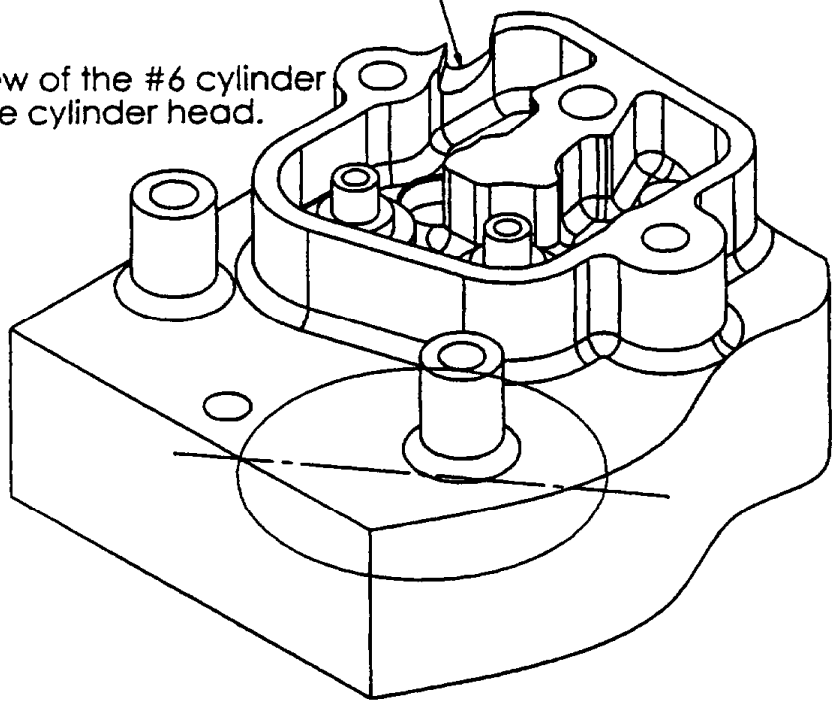

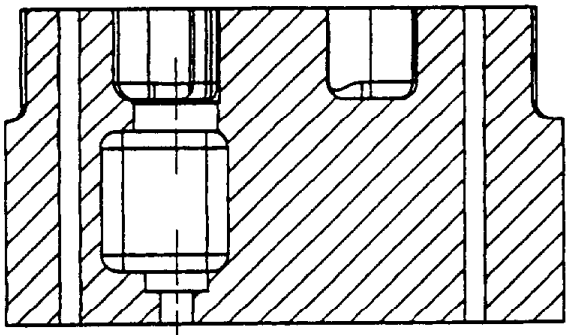

SECTION B-B.

UNLESS OTHERWISE SPECIFIED DIMENSIONS ARE IN INCHES. TOLERANCES ARE: DECIMALS .XX ± .02 .XXX ± .005 ANGLES ±.5°	CONTRACT NO.	**Southwest Research Institute** 6220 Culebra Rd., San Antonio, Tx 78238	
	APPROVALS / DATE	TITLE	Cylinder Head, #6 End Detail, Pressure Transducer Installation, Cummins 6B Gas Engine
MATERIAL	DRAWN Evan S. Guy 11/27/98		
	CHECKED Richard J. Branecky RB		
	ENGR. David P. Meyers DM	SIZE A	DWG. NO. 2369-6 / REV.
FINISH	ISSUED		
DO NOT SCALE DRAWING		SCALE 1:2	SHEET 3 of 3

03-2369-104

APPLICATION		REVISIONS			
NEXT ASSY.	USED ON	REV.	DESCRIPTION	DATE	APPROVED

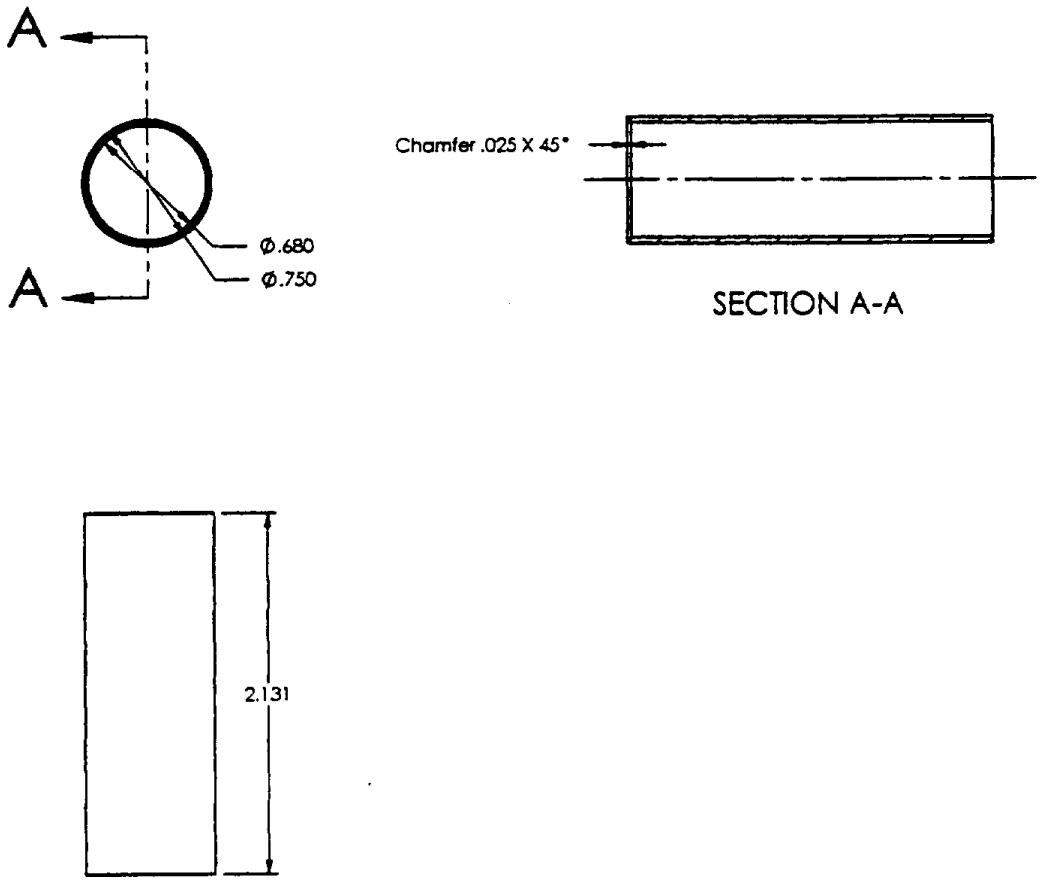

UNLESS OTHERWISE SPECIFIED DIMENSIONS ARE IN INCHES. TOLERANCES ARE: DECIMALS .XX ± .02 .XXX ± .005 ANGLES ±.5°	CONTRACT NO.		**Southwest Research Institute** *6220 Culebra Rd., San Antonio, Tx 78238*
	APPROVALS	DATE	TITLE Transducer Tube
	DRAWN Evan S. Guy	11/27/98	
MATERIAL 304 Stainless Steel	CHECKED Richard J. Branecky RB		
	ENGR. David P. Meyers DM		SIZE A / DWG. NO. 2369-7 / REV.
FINISH	ISSUED		
DO NOT SCALE DRAWING			SCALE 1:1 / SHEET 1 of 1

03-2369-104

APPLICATION		REVISIONS			
NEXT ASSY.	USED ON	REV.	DESCRIPTION	DATE	APPROVED

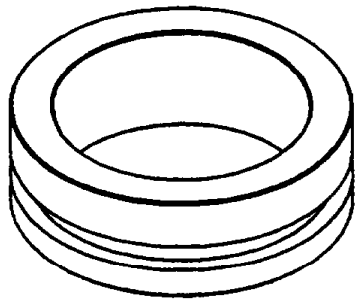

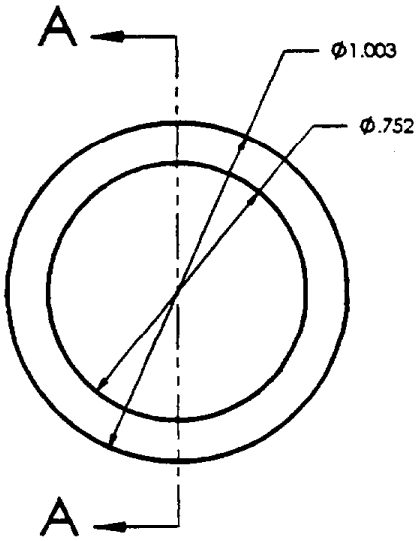

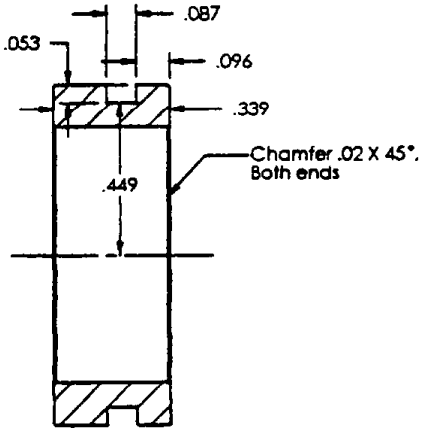

SECTION A-A

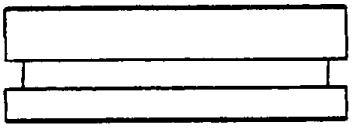

UNLESS OTHERWISE SPECIFIED DIMENSIONS ARE IN INCHES. TOLERANCES ARE: DECIMALS .XX ± .02 .XXX ± .005 ANGLES ±5°	CONTRACT NO.		**Southwest Research Institute** 6220 Culebra Rd., San Antonio, Tx 78238
	APPROVALS	DATE	TITLE
	DRAWN Evan S. Guy	11/27/98	Upper Tube Flange
	CHECKED Richard J. Branecky RJB		
MATERIAL 304 Stainless Steel	ENGR. David P. Meyers DM		SIZE A / DWG. NO. 2369-8 / REV.
FINISH	ISSUED		
DO NOT SCALE DRAWING			SCALE 2:1 / SHEET 1 of 1

03-2369-104

APPLICATION		REVISIONS			
NEXT ASSY.	USED ON	REV.	DESCRIPTION	DATE	APPROVED

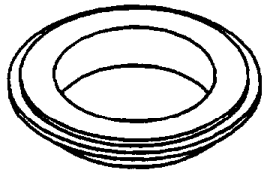

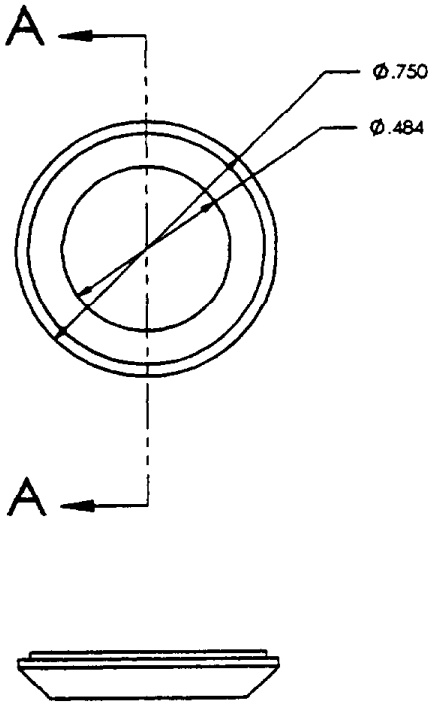

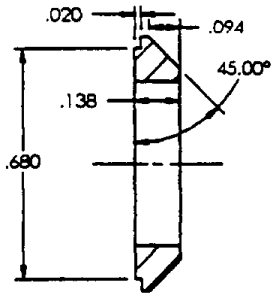

SECTION A-A

UNLESS OTHERWISE SPECIFIED DIMENSIONS ARE IN INCHES. TOLERANCES ARE: DECIMALS .XX ±.02 .XXX ±.005 ANGLES ±.5°	CONTRACT NO.		**Southwest Research Institute** *6220 Culebra Rd., San Antonio, Tx 78238*
	APPROVALS	DATE	TITLE Lower Tube Flange
	DRAWN Evan S. Guy	11/27/98	
	CHECKED Richard J. Branecky		
MATERIAL 304 Stainless Steel	ENGR. David P. Meyers		SIZE A / DWG. NO. 2369-4 / REV.
FINISH	ISSUED		
DO NOT SCALE DRAWING			SCALE 2:1 / SHEET 1 of 1

53-2369-104

APPLICATION		REVISIONS			
NEXT ASSY.	USED ON	REV.	DESCRIPTION	DATE	APPROVED

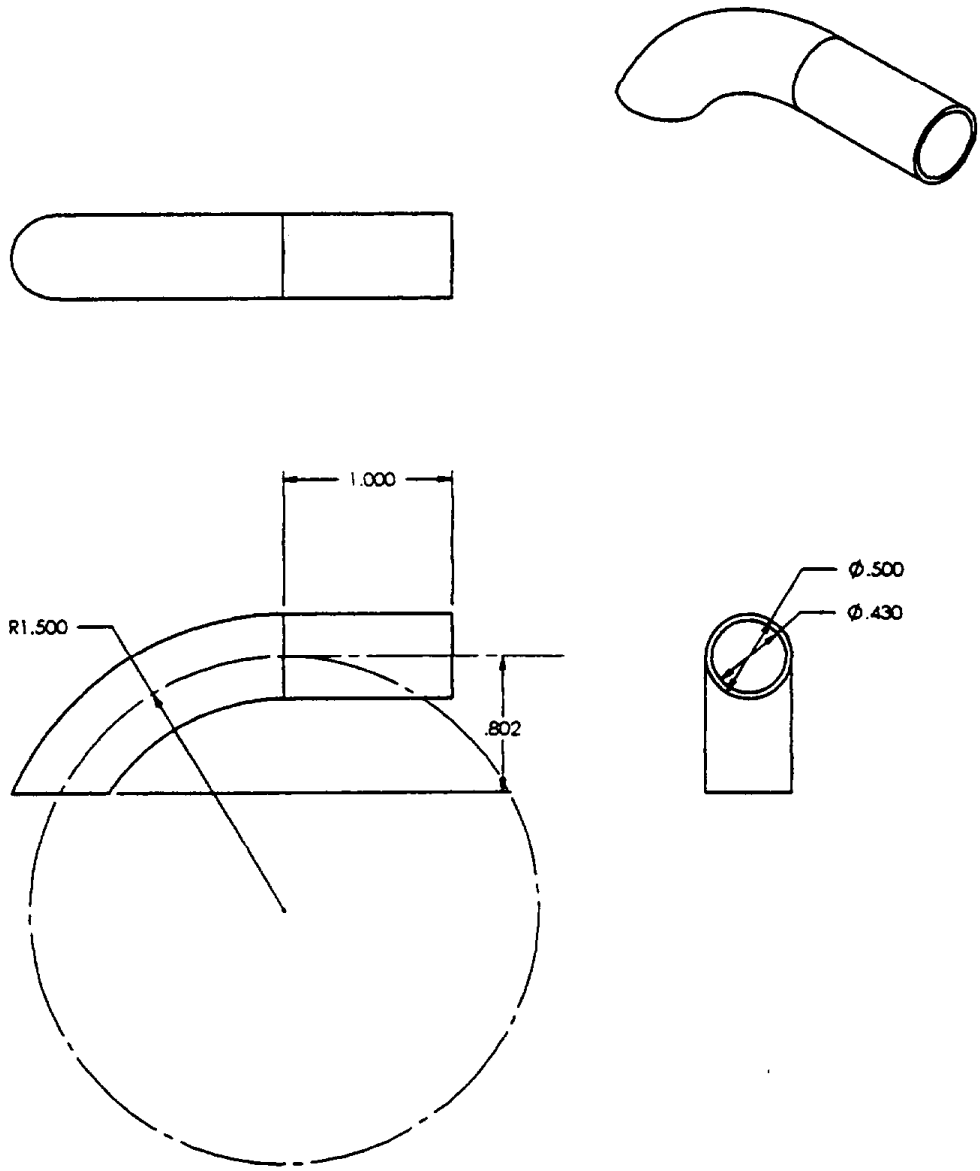

UNLESS OTHERWISE SPECIFIED DIMENSIONS ARE IN INCHES. TOLERANCES ARE: DECIMALS .XX ± .02 .XXX ± .005 ANGLES ±.5°	CONTRACT NO.		**Southwest Research Institute** 6220 Culebra Rd., San Antonio, Tx 78238
	APPROVALS	DATE	TITLE Conduit Tube
	DRAWN Evan S. Guy	11/27/98	
	CHECKED Richard J. Branecky RB		
MATERIAL 304 Stainless Steel	ENGR. David P. Meyers DM		SIZE A / DWG. NO. 2369-10 / REV.
FINISH	ISSUED		
DO NOT SCALE DRAWING			SCALE 1:1 / SHEET 1 of 1

03-2369-104

APPLICATION		REVISIONS			
NEXT ASSY.	USED ON	REV.	DESCRIPTION	DATE	APPROVED

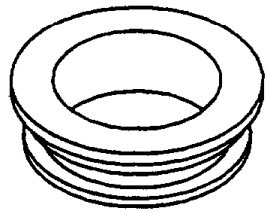

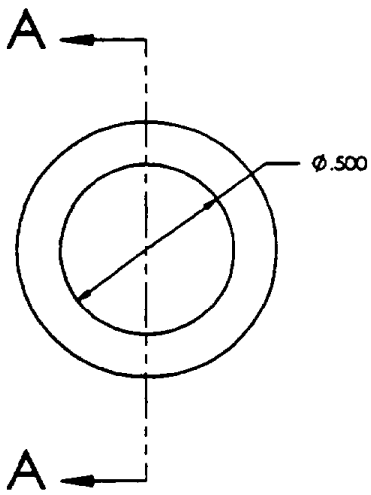

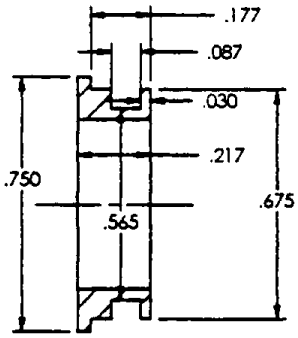

SECTION A-A

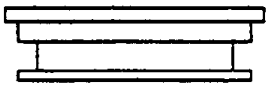

UNLESS OTHERWISE SPECIFIED DIMENSIONS ARE IN INCHES. TOLERANCES ARE: DECIMALS .XX ± .02 .XXX ± .005 ANGLES ±.5°	CONTRACT NO.		**Southwest Research Institute** 6220 Culebra Rd., San Antonio, Tx 78238
	APPROVALS	DATE	TITLE
	DRAWN Evan S. Guy	11/27/98	Conduit Flange
MATERIAL 304 Stainless Steel	CHECKED Richard J. Branecky RJB		
	ENGR. David P. Meyers DM		SIZE A / DWG. NO. 2369-11 / REV.
FINISH	ISSUED		
DO NOT SCALE DRAWING			SCALE 2:1 / SHEET 1 of 1

03-2369-104