Cal/EPA

California
Environmental
Protection
Agency

Air Resources Board
Haagen-Smit Laboratory
P.O. Box 8001
9528 Telstar Avenue
El Monte, CA
91734-8001

MAIL-OUT #96- 30

Pete Wilson
Governor

James M. Strock
Secretary for Environmental Protection

December 18, 1996

TO: ALL MANUFACTURERS OF UTILITY AND LAWN AND GARDEN EQUIPMENT ENGINES
ALL OTHER INTERESTED PARTIES

SUBJECT Tamper-Resistance Requirements for Gaseous-Fueled Engines

The Air Resources Board (ARB) adopted emission regulations and incorporated test procedures for utility and lawn and garden equipment (ULGE) engines in March 1992. All California-sold ULGE engines produced at this time must be certified by the ARB. Certification includes demonstrating that any adjustable-engine parameters that affect emissions are designed with adequate tamper-resistance methods for inhibiting unauthorized in-use adjustments. In-use adjusting of the fuel-system parameters is allowed when the adjustments do not invalidate an engine's emissions compliance.

Fuel-system regulators and mixers used with gaseous-fueled (i.e., liquefied petroleum gas and natural gas) engines typically need in-use adjustments when compensating for varying fuel compositions and pressures. These fuel-system components have traditionally been equipped with in-use anti-tampering safety-related devices because these engines are required to satisfy existing non-ARB quality- and safety-certification requirements, such as those imposed by the Underwriters Laboratories, Inc. and the Canadian Gas Association. Consequently, the engine manufacturers have been reluctant to develop new, more complex, and expensive anti-tampering methods needed to satisfy the ARB requirements for such low-volume production components.

The ARB has always recognized the benefits of in-use engine parameter adjustments (See Mail-Out No. 92-06, issued July 7, 1992). The ARB also realizes that, while many of these equipment engines already comply with other non-ARB certification requirements, such compliance does not necessarily ensure compliance with the ARB emission requirements, or specifically, with the ARB anti-tampering requirements. (See Item No. 12, Mail-Out No. 95-30, issued September 14, 1995). However, recognizing that engine manufacturers would need additional leadtime to develop and implement acceptable, cost-effective tamper-resistance methods, the ARB has permitted certification of gaseous-fueled engine families in the 1996 calendar year on the condition that engine manufacturers continued to make good-faith efforts towards achieving complete compliance with the tamper-

resistance method requirements for the 1997 calendar year (See Item No. 8, Mail-Out No. 95-45, issued January 10, 1996).

In the past year, the Engine Manufacturers Association (EMA) has developed concepts of various tamper-resistance methods that provide flexibility in cost and design. The ARB has evaluated these concepts and preliminarily determined that many may be acceptable for use in actual practice. The results of these evaluations are described herein for the benefit of the entire gaseous-fueled ULGE engine industry.

The ARB will approve for use in production any of the concepts that are preliminarily determined to be acceptable subject to the following conditions:

I. Engine manufacturers are expected to utilize good engineering practice when incorporating any of the preliminarily accepted conceptual methods into their engine designs. The ARB will be checking on how successful an engine manufacturer is in implementing a concept by evaluating actual tamper-resistance method samples. However, evaluating every method that an engine manufacturer is using will not be necessary because the ARB believes that an engine manufacturer's ability to incorporate any of these concepts can be determined by evaluating the execution of only a single method. Accordingly, the ARB will randomly select only one tamper-resistance method from those used in the engine manufacturer's entire product line. Only one selection and evaluation will be conducted per engine manufacturer for each calendar year.

   A manufacturer can facilitate this annual random evaluation by submitting a summary (e.g., tabular format, etc.) of tamper-resistance methods used on engine family models that are expected to be certified for the current year and on models that were certified for the previous year. This summary should identify the specific anti-tampering method used on each engine model, and whether or not the particular method was previously evaluated and approved by the ARB. This summary should be submitted prior to the start of an engine manufacturer's "model-year" certification program (such as an attachment to the required letter of intent [Ref.: Section 14, Part I, Test Procedures of Mail-out No. 95-29, issued August 18, 1996]).

The anti-tampering method that has been specifically approved and any other acceptable methods used in production by an engine manufacturer that were not selected for evaluation, are not required to be reevaluated (or evaluated, as applicable) in later years if the approved method remains the same (i.e., the anti-tampering method(s) may be "carried over"). If the currently approved method is changed in later years, then the ARB may do another random selection in order to evaluate one of the tamper-resistance methods from those used in an engine manufacturer's entire product line. Engine manufacturers may request permission to "carry across" an approved tamper-resistance method from one engine family to another engine family without an ARB evaluation.

II. A previously approved tamper-resistance method may be reevaluated in later years if in-use surveillance, or other information, reveals that the method is failing to provide satisfactory in-use anti-tampering deterence.

III. The ARB will evaluate the randomly selected anti-tampering method using the tamper-resistance provisions in Part I, Section 18(d), of the "California Exhaust Emission Standards and Test Procedures For 1995 and Later Utility and Lawn and Garden Equipment Engines," amended May 26, 1995 [Mail-out No. 95-29]). The methods will be evaluated to determine their ability to deter improper in-use adjustments. In making this determination, the ARB will consider whether the manufacturer makes information about procedures for circumventing and/or disabling an anti-tampering method generally availability. If such information is generally available, the ARB will find that these systems do not adequately deter tampering. Accordingly, engine manufacturers should not make information about circumventing or disabling a particular tamper-resistance method available to unauthorized parties. This information should not be contained within the engine or equipment (as applicable) technical service manuals and owners' manuals.

IV. An engine-family certification application must provide a description of the adjustable engine parameters and the anti-tampering method(s) used on the engine family models.

ALL MANUFACTURERS OF UTILITY AND LAWN AND GARDEN EQUIPMENT ENGINES
ALL OTHER INTERESTED PARTIES

PRELIMINARILY ACCEPTABLE TAMPER-RESISTANCE CONCEPTUAL METHODS

1. Aluminum Plug
   Aluminum plugs can be used to cover recessed adjustment screws on regulators and carburetors. The plug thickness is a function of the corresponding diameter; however, a minimum thickness of 0.060 inch is required. Plugs should be installed with a press-in operation that provides an interference fit. See Figure F-1, Attachment A.
2. Steel Plug
   Steel plugs can be used to cover recessed adjustment screws on regulators and carburetors. The plug thickness is a function of the corresponding diameter; however, a minimum thickness of 0.030 inch is required. Plugs should be installed with a press-in operation that provides an interference fit. See Figure F-2, Attachment A.

3. Rubber, Plastic, and RTV Plug
   Form-in-place and premolded plugs of polymers (e.g., thermoplastics, thermosetting plastics, elastomers, etc.) may be acceptable for covering recessed adjustment screws on regulators and carburetors only if the plug material has sufficient strength, hardness and adhesive properties. In other words, the plug must be of a very robust material that is not easily penetrated and/or pulled out of the recessed hole. Additionally, a plug may be of a material that "softens" after applying a solvent so that removing the plug is easier during authorized servicing. A plug should be installed flush with, or recessed below, the surrounding surface (See Figure F-3, Attachment A). Listings of examples of commercially available premolded parts that may be suitable for plugs are in Tables T-1 through T-5 of Attachment A.

4. Screw-In Plug with Special Head
   Adjustment screws with specially machined heads are acceptable. The various special-head designs of the fasteners shown in Figure F-10 of Attachment A may also be used for the special-head designs of screw-in adjustment plugs. Installing and removing these screw-in plugs should require using a special tool. Also, installing a screw-in plug should include specifying a torque value. See Figure F-4, Attachment A.

5. Locking-Steel Cap or Cover
   Locking-steel caps consist of a collar held in place by a lock nut screwed onto the adjustable parameter. A cap having a minimum of four lugs covers the collar-lock nut assembly. The lugs are pressed into a circumferential groove on the collar (See Figure F-5, Attachment A). Steel is the preferred material.

6. Alternate Steel Plug
Alternate steel plugs can be used to cover recessed adjustment screws on regulators and carburetors. These plugs are steel caps with compressible prongs extending from the caphead (See Figure F-6, Attachment A). Also, these plugs could possibily be used in conjunction with plastic, elastomers, etc., materials to further enhance the tamper-resistance ability.

7 Cover Plate
Cover plates can be used to conceal an adjustable parameter. These plates may be attached to either the engine or a bracket. Special-headed screws, such as the fasteners illustrated in Figure F-10 of Attachment A, should be used to fasten a cover plate (See Drawing D-1, Attachment A). Installing and removing the screw should require using a special tool. The screw installation should specify a torque value.

8. Roll Pin
A small-diameter steel pin mounted crosswise within a recessed hole will bar access to an adjustment screw (See Figure F-8, Attachment A) The pin should be installed with an interference fit. The exposed head of the adjusting screw should be a hex-head insert type. Otherwise, all other types of special-headed adjustment screws should be covered by a steel plug.

9 Special-Headed Locking Set-Screw
A special-headed screw (e.g., Torx ™ head, etc.) for locking the setting of adjustment is acceptable (See Figure F-9, Attachment A, and Acceptable Concept Method No. 4). The various special-head designs of the fasteners shown in Figure F-10 of Attachment A indicate acceptable special-head designs for a locking set-screw. Installing and removing the set-screw should require using a special tool. Installing a set-screw should include specifying a torque value.

10. Limited Adjustment Range on A Regulator
Acceptable.

11. Special Screw Adhesive and Solvent
Acceptable (Ref.: Acceptable Concept Method No. 3.).

12. Pressed-In Orifice
Acceptable.

13. Adjustment Using Internal Special-Headed Screw and Insert
Acceptable when used with a friction-inducing insert, or with Loctite™ or similar compound. This method is similar to Acceptable Concept Method No. 9.

NOT ACCEPTABLE TAMPER-RESISTANCE CONCEPTUAL METHODS

1. Circular Ring -- Circlip
Not acceptable (See Figure F-11, Attachment A). Pliers used for removing and installing these clips are readily available at retail outlets.

2. Polyurethane Foam Application and Solvent Removal
Not Acceptable. Suggest using the method described in Acceptable Concept Method No. 3.

3. Other Screw or Screwhead Designs
Lefthand screw threads, and roundhead square-drive and clutch-head screw head designs are not acceptable for use in anti-tampering methods.

4 Different-Colored Replacement Plug
The use of different colored plugs solely as an anti-tampering method is not acceptable. Plugs of different colors may be used; however, one of the acceptable concepts must be used to provide the anti-tampering method.

The EMA proposal also included suggestions about other possible areas or sources for additional anti-tampering method concepts. These other sources include:

1 Increased Usage of Plastic Materials
The ARB recognizes that plastic materials may offer significant advantages over metallic materials in anti-tampering applications. Accordingly, a continued investigation of the availability of such suitable polymer materials is encouraged.

2. SAE J2317 -- Tamper Resistance For Diesel Fuel Injection Pumps
The Society of Automotive Engineers' (SAEs') Document J2317, "Tamper Resistance For Adjustable Parameters On Diesel Fuel Injection Pumps,' issued August 1996, provides information that may be applicable for anti-tampering methods used on gaseous-fueled ULGE engines.

ALL MANUFACTURERS OF UTILITY AND LAWN AND GARDEN EQUIPMENT ENGINES
ALL OTHER INTERESTED PARTIES

Any requests for addtional information regarding this subject should be directed to Mr. Duc Nguyen, Manager, Certification Section, or Mr. Ronald Haste, Staff Engineer, at (818) 575-7067.

Sincerely,

R. B. Summerfield, Chief
Mobile Source Operations Division

Attachment

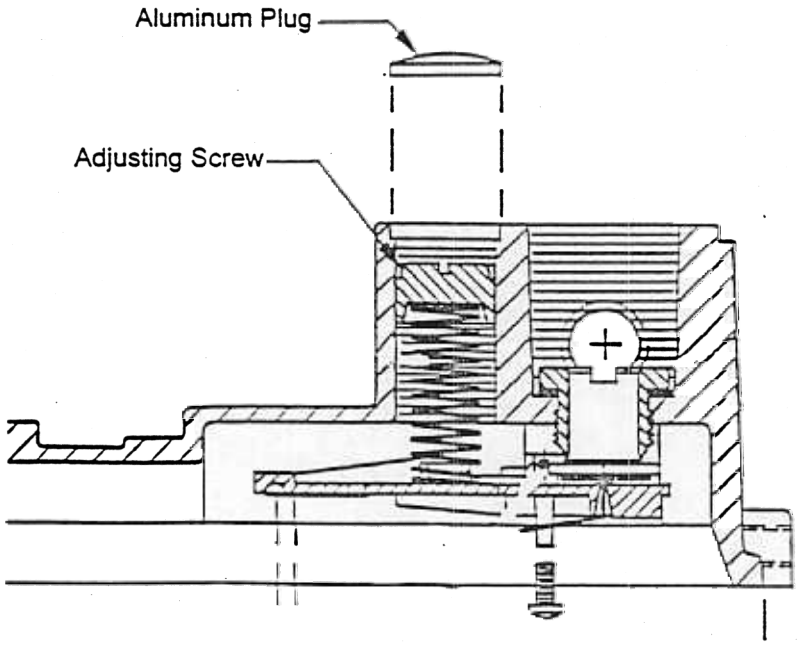

FIGURE F-1: ALUMINUM PLUG

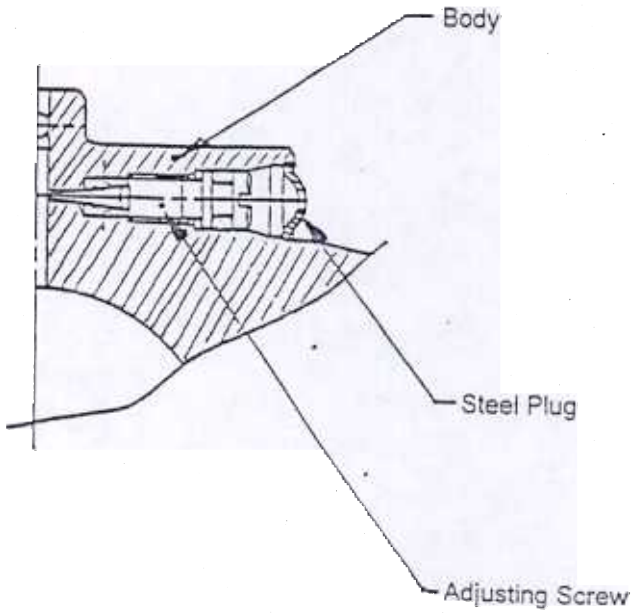

FIGURE F- 2: STEEL PLUG

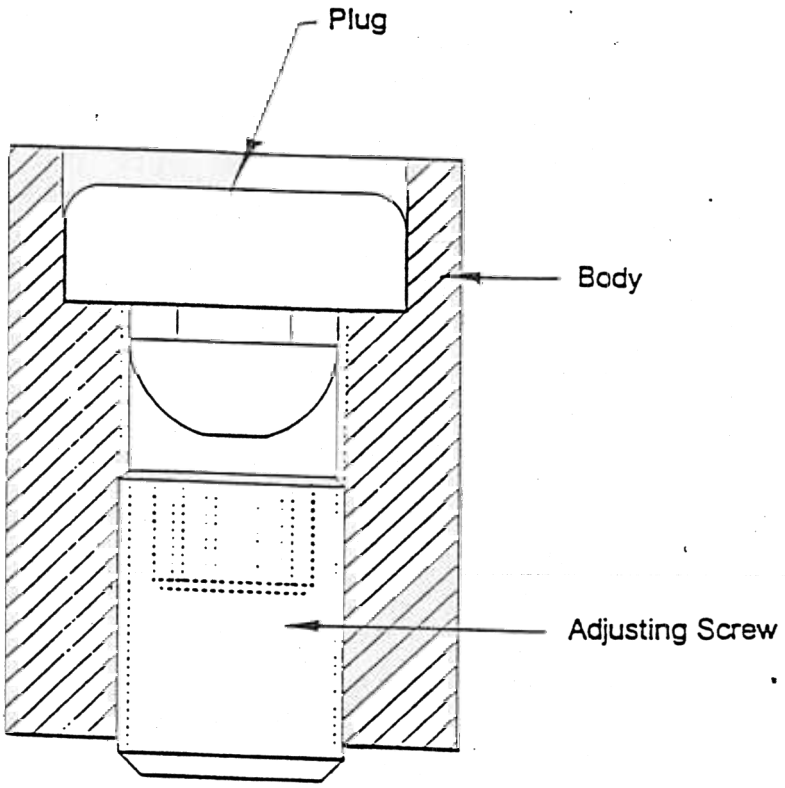

FIGURE F-3: PLASTIC PLUG

GROMMET BUMPERS — MOLDED GROMMETS

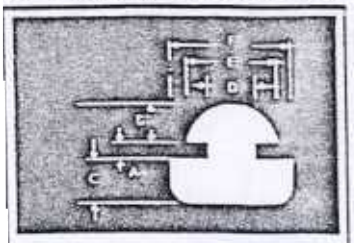

A Groove Width	B Head Height	C Bumper Height	D Groove Diameter	E Head Diameter	F Bumper Diameter	PART NO.
1/16	1/8	5/32	1/4	5/16	1/2	1561
1/32	1/8	1/8	1/8	3/16	5/16	284
1/8	11/64	11/32	9/32	7/16	5/8	1422
1/16	3/32	5/8	11/32	13/32	9/16	1725

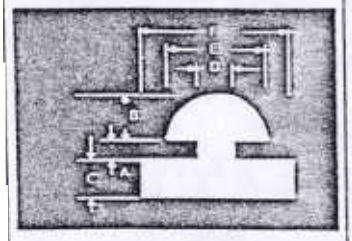

3/64	5/64	1/4	1/4	3/8	9/16	6156
1/16 1/16 1/16 1/16	7/64 7/64 1/8 1/8	3/64 3/32 5/32 1/4	1/8 5/32 1/4 1/4	3/16 7/32 5/16 5/16	5/16 3/8 1/2 1/2	829 1257 3987 734
1/8	1/8	1/8	1/4	11/32	9/16	711
5/64	5/32	1/8	9/32	3/8	9/16	1138
1/16 1/16	3/32 3/32	5/32 5/16	11/32 11/32	13/32 13/32	9/16 9/16	740 740-B
3/16	3/16	5/16	1/2	11/16	1	2250

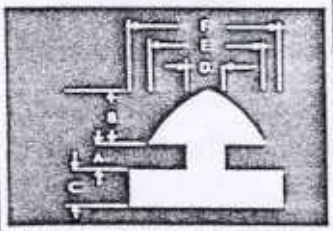

1/32	7/64	3/64	1/8	3/16	5/16	521
1/16 1/16 1/16	3/16 3/16 3/16	3/32 5/32 13/32	3/16 3/16 3/16	1/4 1/4 1/4	1/2 1/2 1/2	1178-1 1178-2 1178-3

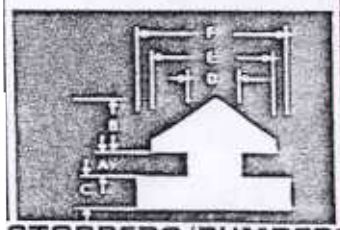

7/64 3/64	5/64 3/32	1/16 1/8	5/32 3/16	1/4 1/4	1/2 5/16	1792 785
1/16	1/16	1/8	3/16	1/4	5/16	962
3/64 3/64	1/8 1/8	3/32 3/16	1/4 1/4	5/16 5/16	7/16 7/16	716 759
3/32	1/8	1/4	5/16	3/8	5/8	778

MOLDED

STOPPERS/BUMPERS

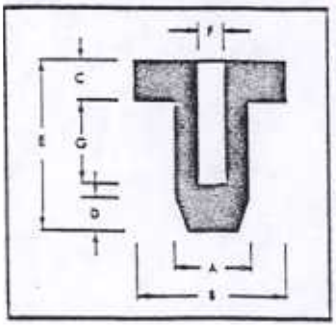

A Stem Diameter	B Cap Diameter	C Cap Height	D Chamferred Height	E Total Height	F Recess Diameter	G Recess Height	PART NO.
11/32	5/8	3/16	1/4	1	1/8	13/16	1149
3/8	3/4	7/32	5/16	1-1/8	5/32	7/8	1580
1/2	7/8	1/4	5/16	1-1/4	3/16	1	854
19/32	1	15/64	29/64	1-9/16	1/4	1-3/8	1026
5/8	1	1/4	7/16	1-1/2	1/4	1-5/16	835
21/32	1-1/16	15/64	29/64	1-1/4	1/4	1-1/16	1027
3/4	1	1/4	9/16	1-1/2	1/4	1-5/16	1148

MANY PARTS ARE AVAILABLE FROM STOCK

13308 W. CREEKSIDE DR.
LOCKPORT, IL 60441
(312) 479-4000
TELEX 265661
FAX 479-4003

ALL STATES RUBBER & TOOL CORP.

TABLE T-1: PLASTIC PLUGS

STEM BUMPERS

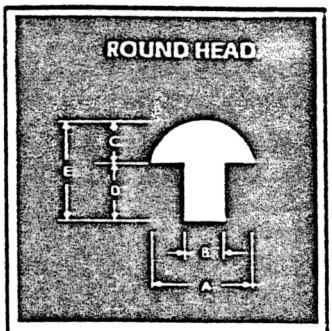

A Head Diameter	B Stem Diameter	C Head Height	D Stem Length	E Overall Thickness	PART NO.
1/4	3/16	3/16	3/16	3/8	1107
5/16	3/16	1/8	3/16	5/16	713
3/8	3/16	1/8	3/16	5/16	12
7/16	1/4	1/8	1/4	3/8	709
5/8 5/8	5/16 5/16	5/16 11/32	1/4 9/32	9/16 5/8	868 1114
3/4	3/8	3/8	3/8	3/4	1111
5/8 7/8	7/16 1/2	5/16 3/8	5/16 15/32	5/8 27/32	1005 1006
15/16 1-3/16	19/32 5/8	19/32 11/16	15/32 3/4	1-1/16 1-7/16	1112 1113

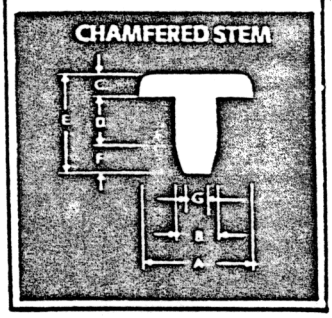

A Head Diameter	B Stem Diameter	C Head Height	D Stem Length	E Overall Thickness	F Chamfer Height	G Chamfer Diameter	PART NO.
1/2 1/2	3/16 3/16	.025 1/16	1/4 1/4	.275 5/16		3/32	4521 11F
3/4	1/2	21/32	1/2	1-5/32			160
7/8 1-5/8	5/8 57/64	1/4 5/16	3/8 7/8	5/8 1-3/16	1/16	9/16	1647 1134

BUSHINGS

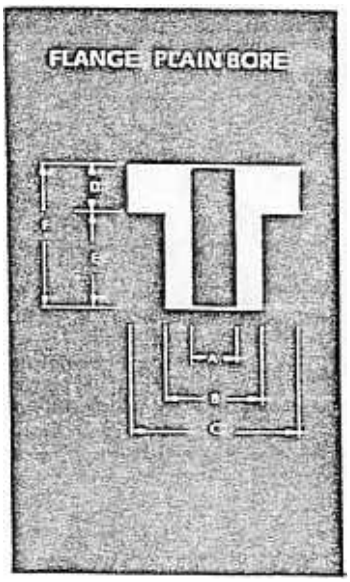

A Inside Diameter	B Stem Diameter	C Flange Diameter	D Flange Height	E Stem Height	F Total Height	PART NO.
1/8 1/8	1/4 7/16	3/8 1/2	7/64 1/4	17/64 3/8	3/8 5/8	962 380
3/64	1/2	3/4	1/8	1/4	3/8	1015
11/64	3/32	1/2	3/32	7/64	13/64	795
3/16 3/16 3/16 3/16 3/16	7/16 7/16 7/16 1/2 1/2	3/4 3/4 3/4 11/16 3/4	1/16 1/16 1/16 1/4 1/8	5/16 7/16 11/16 3/16 1/4	3/8 1/2 3/4 7/16 3/8	723 724 722 378 1761
7/32 7/32 7/32 7/32	13/32 7/16 1/2 1/2	1/2 1 3/4 3/4	1/16 3/16 1/8 3/16	3/16 1/8 1/4 27/32	1/4 5/16 3/8 1-1/32	557 232 767 1222
*1/4 1/4 1/4 1/4 *1/4 1/4	3/8 13/32 7/16 1/2 19/32 5/8	3/4 5/8 5/8 1 3/4 1-1/2	1/8 3/32 3/64 1/8 1/8 1/16	3/8 5/16 13/64 3/8 3/8 5/8	1/2 13/32 1/4 1/2 1/2 11/16	174 1681 748 643 579 718-1
5/16 *5/16 5/16 5/16	15/32 1/2 1/2 5/8	1-1/4 3/4 1-1/4 1	3/16 1/8 3/16 1/4	3/16 9/32 13/32 3/8	3/8 13/32 19/32 5/8	1544 646 1185 29
3/8	5/8	1-1/2	1/16	5/8	11/16	7182
4-3/4	5-3/4	6-5/8	3-3/16	7/8	5-5/8	1606

* = Rounded edge

ALL STATES RUBBER & TOOL CORP.

13308 W. CREEKSIDE DR.
LOCKPORT, IL 60441
(312) 479-4000
TELEX 265661
FAX 479-4003

TABLE T-2: PLASTIC PLUGS

NYLON HOLE PLUGS VENT PLUGS

Micro Plastics economical snap-in Poly-Plugs will close unneeded chassis holes, wiring cutlets, fill unused accessory openings, cover inspection and production access holes. They can be used as tube end caps and protective bumpers. Poly Plugs are molded in Nylon 6/6 which is abrasion and vibration resistant making them ideal for drawer glides and small appliance feet. Poly Plugs are designed with special flexible and tapered prongs which snugly lock in place with finger pressure but can be removed and reused when necessary. Parts can be furnished in natural nylon or dyed in colors. Poly Plugs are available in smooth, gloss finish or in dull, matte finish.

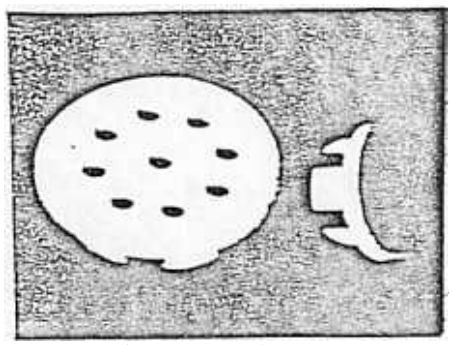

ITEM NUMBER	HEAD STYLE	FINISH	HOLE SIZE A	PANEL THICKNESS B	HEAD SIZE D	HEAD HEIGHT H
62PP016SG14	Binder	Smooth	.187 (4.75)	.031/.140 (0.79/3.55)	11/32 (8.74)	.040 (1.02)
62PP016SM14	Binder	Matte	.187 (4.75)	.031/.140 (0.79/3.55)	11/32 (8.74)	.040 (1.02)
62PP022PG06	Dome	Smooth	.218 (5.54)	.031/.062 (0.79/1.58)	3/8 (9.53)	.250 (6.35)
62PP025SG06	Binder	Smooth	.250 (6.35)	.031/.062 (0.79/1.58)	27/64 (10.72)	.040 (1.02)
62PP025SM06	Binder	Matte	.250 (6.35)	.031/.062 (0.79/1.58)	27/64 (10.72)	.040 (1.02)
62PP031SG14	Binder	Smooth	.312 (7.93)	.031/.140 (0.79/3.55)	29/64 (11.51)	.050 (1.27)
62PP031SM14	Binder	Matte	.312 (7.93)	.031/.140 (0.79/3.55)	29/64 (11.51)	.050 (1.27)
62PP012SG09	Binder	Smooth	.125 (3.18)	.031/.094 (0.79/2.39)	13/64 (5.16)	.040 (1.02)
62PP015SG09	Binder	Smooth	.150 (3.81)	.031/.094 (0.79/2.39)	1/4 (6.35)	.040 (1.02)
62PP037SG14	Binder	Smooth	.375 (9.53)	.031/.140 (0.79/3.55)	43/64 (17.07)	.062 (1.58)
62PP037SG31	Binder	Smooth	.375 (9.53)	.031/.140 (0.79/3.55)	37/64 (14.68)	.050 (1.27)
62PP037SM31	Binder	Matte	.375 (9.53)	.031/.140 (0.79/3.55)	37/64 (14.68)	.050 (1.27)
62PP043SG17	Binder	Smooth	.437 (11.10)	.031/.171 (0.79/4.34)	39/64 (15.47)	.050 (1.27)
62PP043SM17	Binder	Matte	.437 (11.10)	.031/.171 (0.79/4.34)	39/64 (15.47)	.050 (1.27)
62PP048SM12	Binder	Matte	.480 (12.19)	.031/.039 (0.79/0.99)	37/64 (14.68)	.050 (1.27)
62PP050SG14	Binder	Smooth	.500 (12.70)	.031/.140 (0.79/3.55)	43/64 (17.07)	.062 (1.58)
62PP050SM14	Binder	Matte	.500 (12.70)	.031/.140 (0.79/3.55)	43/64 (17.07)	.062 (1.58)
62PP056SG14	Binder	Smooth	.562 (14.28)	.031/.140 (0.79/3.55)	47/64 (18.64)	.062 (1.58)
62PP056SM14	Binder	Matte	.562 (14.28)	.031/.140 (0.79/3.55)	47/64 (18.64)	.062 (1.58)
62PP062SG07	Binder	Smooth	.625 (15.88)	.031/.072 (0.79/1.83)	51/64 (20.24)	.062 (1.58)
62PP062SM07	Binder	Matte	.625 (15.88)	.031/.072 (0.79/1.83)	51/64 (20.24)	.062 (1.58)
62PP069SG10	Binder	Smooth	.687 (17.45)	.031/.109 (0.79/2.77)	57/64 (22.53)	.062 (1.58)
62PP069SM10	Binder	Matte	.687 (17.45)	.031/.109 (0.79/2.77)	57/64 (22.53)	.062 (1.58)
62PP075SG11	Binder	Smooth	.750 (19.05)	.031/.109 (0.79/2.77)	63/64 (25.00)	.062 (1.58)
62PP075SM11	Binder	Matte	.750 (19.05)	.031/.109 (0.79/2.77)	63/64 (25.00)	.062 (1.58)
62PP078SG09	Binder	Smooth	.787 (20.00)	.059/.080 (1.50/2.03)	63/64 (25.00)	.062 (1.58)
62PP078SM09	Binder	Matte	.787 (20.00)	.059/.080 (1.50/2.03)	63/64 (25.00)	.062 (1.58)
62PP081SG11	Binder	Smooth	.812 (20.63)	.031/.109 (0.79/2.77)	1 1/32 (26.19)	.062 (1.58)
62PP081SM11	Binder	Matte	.812 (20.63)	.031/.109 (0.79/2.77)	1 1/32 (26.19)	.062 (1.58)
62PP087SG11	Binder	Smooth	.875 (22.23)	.031/.109 (0.79/2.77)	1 5/64 (27.38)	.062 (1.58)
62PP087SM11	Binder	Matte	.875 (22.23)	.031/.109 (0.79/2.77)	1 5/64 (27.38)	.062 (1.58)
62PP100SG11	Binder	Smooth	1.000 (25.40)	.031/.109 (0.79/2.77)	1 7/32 (30.96)	.062 (1.58)
62PP100SM11	Binder	Matte	1.000 (25.40)	.031/.109 (0.79/2.77)	1 7/32 (30.96)	.062 (1.58)

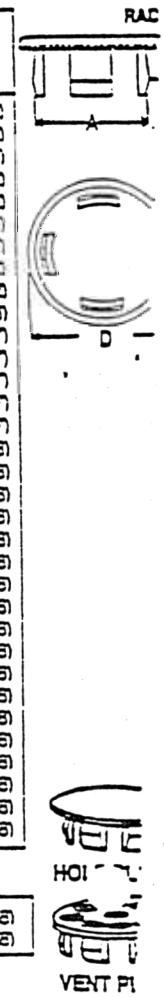

VENT PLUGS

62VP087SM11	Binder	Matte	.875 (22.23)	.031/.109 (0.79/2.77	1 5/64 (27.38)	.062 (1.58)
62VP100SM11	Binder	Matte	1.000 (25.40)	.031/.109 (0.79/2.77)	1 7/32 (30.96)	.062 (1.58)

TELEPHONE (501) 453-8861 / 453-2281 micro plastics, inc. FAX (501) 453-8841

TABLE T-3: PLASTIC PLUGS

NYLON LOCKING HOLE PLUGS

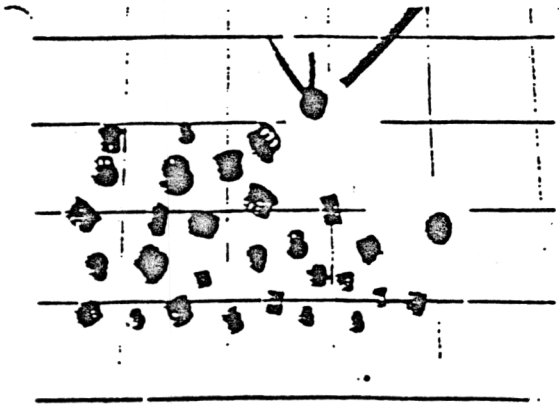

Nylon Locking Hole Plugs are available in a large selection of sizes from 3/16" to 2". These hole plugs are designed with multiple locks to positively snap in panel thicknesses ranging from 1/64" to 1/8".

Locking Hole Plugs are used to close excess chassis holes, wiring outlets, and production access holes. These hole plugs are molded of heat stabilized nylon (UL94V2) and may be more suitable for critical or elevated temperature applications.

Vent Plugs are available in the 7/8" and 1" diameters. Locking Hole Plugs are stocked in black. Other colors are available in volume requirements.

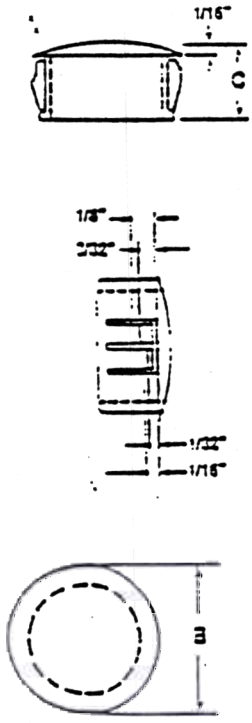

DESCRIPTION	CHASSIS DIMENSIONS			PART DIMENSIONS	
ITEM NUMBER	HOLE DIAMETER		MAXIMUM THICKNESS	HEAD DIAMETER B	THICKNESS C
• 62MP0187	.187	(4.8)	.062 (1.6)	.250 (6.4)	.234 (5.9)
• 62MP0250	.250	(6.4)	.062 (1.6)	.312 (8.0)	.312 (8.0)
• 62MP0312	.312	(8.0)	.062 (1.6)	.375 (9.5)	.312 (8.0)
• 62MP0375	.375	(9.5)	.125 (3.2)	.468 (12.0)	.406 (10.3)
• 62MP0437	.437	(11.0)	.125 (3.2)	.531 (13.5)	.406 (10.3)
• 62MP0500	.500	(12.7)	.125 (3.2)	.578 (14.6)	.406 (10.3)
• 62MP0552	.552	(14.3)	.125 (3.2)	.656 (16.7)	.406 (10.3)
• 62MP0625	.625	(15.9)	.125 (3.2)	.718 (18.2)	.406 (10.3)
• 62MP0687	.687	(17.5)	.125 (3.2)	.781 (20.0)	.406 (10.3)
• 62MP0750	.750	(19.0)	.125 (3.2)	.922 (23.2)	.406 (10.3)
• 62MP0812	.312	(20.6)	.125 (3.2)	.890 (22.6)	.406 (10.3)
• 62MP0875	.875	(22.2)	.125 (3.2)	1.016 (25.8)	.453 (11.5)
** 62MP1000	1.000	(25.5)	.125 (3.2)	1.203 (30.5)	.453 (11.5)
** 62MP1093	1.093/125	(28.0/28.5)	.125 (3.2)	1.218 (31.0)	.453 (11.5)
** 62MP1187	1.187	(30.1)	.125 (3.2)	1.312 (33.3)	.453 (11.5)
** 62MP1250	1.250	(32.0)	.125 (3.2)	1.375 (34.9)	.453 (11.5)
** 62MP1375	1.375	(35.0)	.125 (3.2)	1.500 (38.0)	.453 (11.5)
** 62MP1500	1.500	(38.0)	.125 (3.2)	1.672 (42.7)	.453 (11.5)
** 62MP1750	1.750	(45.0)	.125 (3.2)	1.906 (48.4)	.453 (11.5)
** 62MP2000	2.000	(51.0)	.125 (3.2)	2.140 (55.0)	.453 (11.5)

LOCKING VENT PLUGS

• 62MP0875V	.875	(22.5)	.125 (3.2)	1.016 (25.8)	.453 (11.5)
** 62MP1000V	1.000	(25.5)	.125 (3.2)	1.203 (30.5)	.453 (11.5)

*Minimum order quantity 1,000 pieces.
**Minimum order quantity 500 pieces.

HIGHWAY 178 NORTH micro plastics, inc. FLIPPIN, ARKANSAS 72634

TABLE T-4: PLASTIC PLUGS

MOLDED ACETAL RIVET

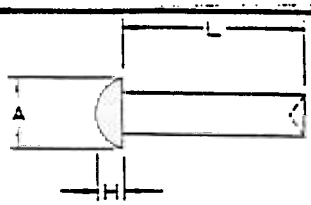

Molded plastic rivets are used for glides, insulators, etc.

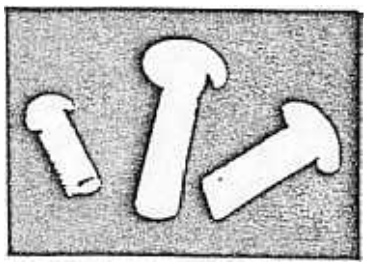

ITEM NUMBER	DESCRIPTION	SHANK		A		H		LENGTH	
26RIV001	RIV 1	.085	(2.16)	.147	(3.73)	.058	(1.47)	1/8	3
26RIV002	RIV 2	.085	(2.16)	.147	(3.73)	.058	(1.47)	3/16	.,6
26RIV003	RIV 3	.085	(2.16)	.147	(3.73)	.058	(1.47)	1/4	(6.35
26RIV004	RIV 4	.085	(2.16)	.147	(3.73)	.058	(1.47)	5/16	(7.94
26RIV005	RIV 5	.085	(2.16)	.147	(3.73)	.058	(1.47)	3/8	(9.53
26RIV006	RIV 6	.085	(2.16)	.147	(3.73)	.058	(1.47)	7/16	(11.11
26RIV007	RIV 7	.085	(2.16)	.147	(3.73)	.058	(1.47)	1/2	(12.70
26RIV011	RIV11	.125	(3.18)	.250	(6.35)	.068	(1.73)	1/8	(3.18
26RIV012	RIV12	.125	(3.18)	.250	(6.35)	.068	(1.73)	3/16	(4.76
26RIV013	RIV13	.125	(3.18)	.250	(6.35)	.068	(1.73)	1/4	(6.35
26RIV014	RIV14	.125	(3.18)	.250	(6.35)	.068	(1.73)	5/16	(7.94
26RIV015	RIV15	.125	(3.18)	.250	(6.35)	.068	(1.73)	3/8	(9.53
26RIV016	RIV16	.125	(3.18)	.250	(6.35)	.068	(1.73)	7/16	(11.1
26RIV017	RIV17	.125	(3.18)	.250	(6.35)	.068	(1.73)	1/2	(12.70
26RIV018	RIV18	.125	(3.18)	.250	(6.35)	.068	(1.73)	9/16	(14.2
26RIV019	RIV19	.125	(3.18)	.250	(6.35)	.068	(1.73)	5/8	(15.8
26RIV020	RIV20	.125	(3.18)	.250	(6.35)	.068	(1.73)	11/16	(17.4
26RIV021	RIV21	.125	(3.18)	.218	(5.54)	.090	(2.29)	1/8	(3.1
26RIV022	RIV22	.125	(3.18)	.218	(5.54)	.090	(2.29)	3/16	(4.7
26RIV023	RIV23	.125	(3.18)	.218	(5.54)	.090	(2.29)	1/4	(6.3
26RIV024	RIV24	.125	(3.18)	.218	(5.54)	.090	(2.29)	5/16	(7.9
26RIV025	RIV25	.125	(3.18)	.218	(5.54)	.090	(2.29)	3/8	(9.5
26RIV026	RIV26	.125	(3.18)	.218	(5.54)	.090	(2.29)	1/2	(12.7
26RIV050	RIV50	.125	(3.18)	.255	(6.48)	.051	(1.30)	1/4	(6.3
26RIV055	RIV55	.125	(3.18)	.255	(6.48)	.051	(1.30)	3/8	(9.5

MOLDED PLASTIC DOWELS

Uses include dowel pins, stop pins, insulating, ...e switch actuators, and keys. Natural color acetal plastic standard though they may be molded of other materia Other lengths are available.

ITEM NUMBER	DESCRIPTION	O.D.		LENGTH	
2500470125	047125	.047	(1.19)	1/8	(3.18)
2500470250	047250	.047	(1.19)	1/4	(6.35)
2500470375	047375	.047	(1.19)	3/8	(9.53)
2500470500	047500	.047	(1.19)	1/2	(12.70)
2500620125	062125	.062	(1.57)	1/8	(3.18)
2500620250	062250	.062	(1.57)	1/4	(6.35)
2500620375	062375	.062	(1.57)	3/8	(9.53)
2500620500	062500	.062	(1.57)	1/2	(12.70)
2500930125	093125	.093	(2.36)	1/8	(3.18)
2500930250	093250	.093	(2.36)	1/4	(6.35)
2500930375	093375	.093	(2.36)	3/8	(9.53)
2500930500	093500	.093	(2.36)	1/2	(12.70)
2501250125	125125	.125	(3.18)	1/8	(3.18)
2501250187	125187	.125	(3.18)	3/16	(4.76)
2501250250	125250	.125	(3.18)	1/4	(6.35)
2501250375	125375	.125	(3.18)	3/8	(9.53)
2501250500	125500	.125	(3.18)	1/2	(12.70)
2501870125	187125	.187	(4.75)	1/8	(3.18)
2501870250	187250	.187	(4.75)	1/4	(6.35)
2501870375	187375	.187	(4.75)	3/8	(9.53)
2501870500	187500	.187	(4.75)	1/2	(12.70)
2501870750	187750	.187	(4.75)	3/4	(19.05)
2502451250	245250	.245	(6.22)	1-1/4	(31.75)
2502100500	210500	.210	(5.33)	1/2	(12.70)
2502500125	250125	.250	(6.35)	1/8	(3.18)
2502500250	250250	.250	(6.35)	1/4	(6.35)
2502500375	250375	.250	(6.35)	3/8	(9.53)
2502500500	250500	.250	(6.35)	1/2	(12.70)
2502500750	250750	.250	(6.35)	3/4	(19.05)
2503120125	312125	.312	(7.92)	1/8	(3.18)
2503120250	312250	.312	(7.92)	1/4	(6.35)
2503120375	312375	.312	(7.92)	3/8	(9.53)
2503120500	312500	.312	(7.92)	1/2	(12.70)
2503120625	312625	.312	(7.92)	5/8	(15.88)
2503120750	312750	.312	(7.92)	3/4	(19.05)
2504370250	437250	.437	(11.10)	1/4	(6.35)

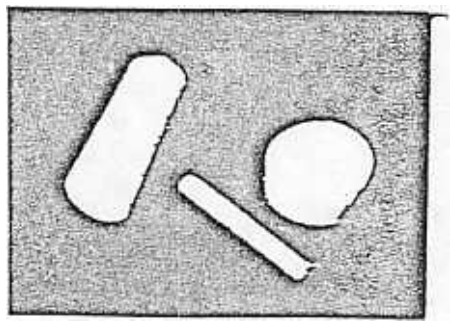

TELEPHONE (501) 453-8861 / 453-2261 micro plastics, inc. FAX (501) 453-8841

TABLE T-5: PLASTIC PLUGS

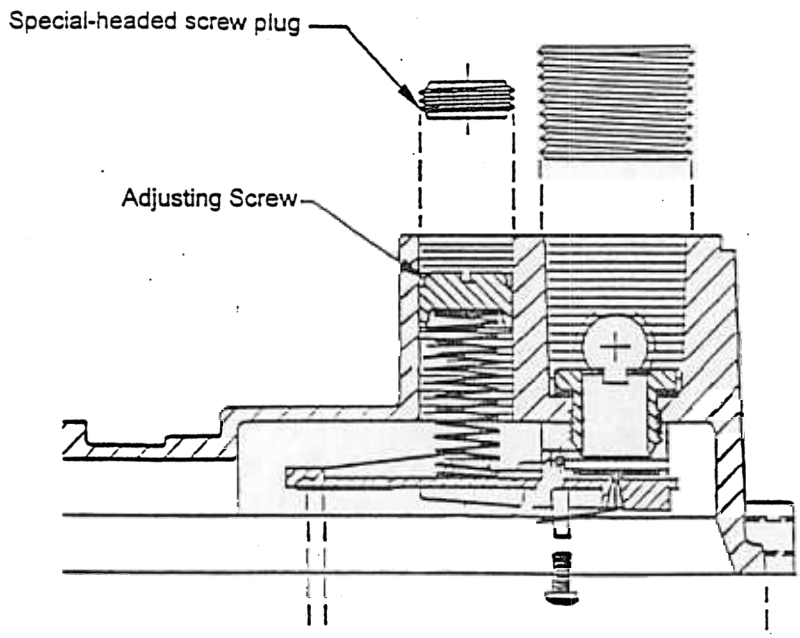

FIGURE F-4: SPECIAL-HEADED SCREW-IN PLUG

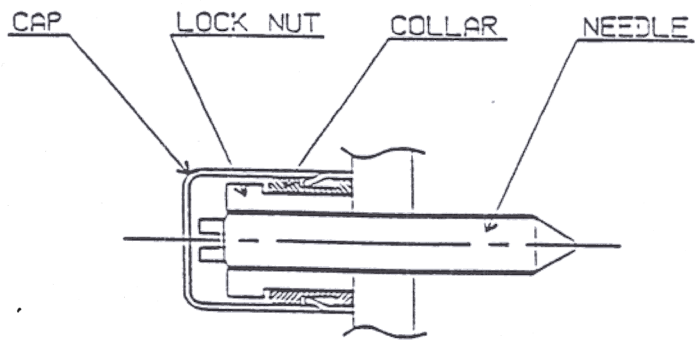

FIGURE F-5: LOCKING STEEL COVER

Stimpson Co., Inc.
900 Sylvan Ave.
Bayport, NY 11705-1097

TUBING HOLE PLUGS

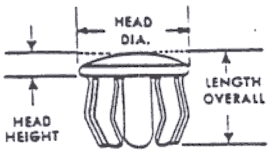

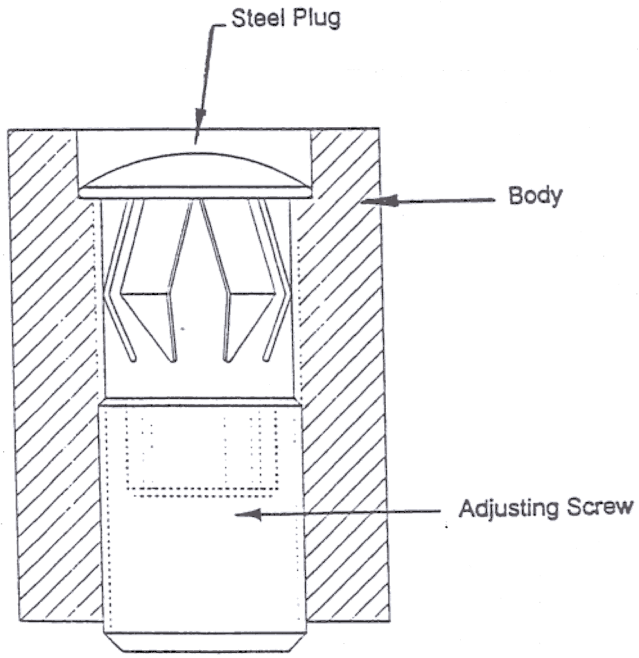

FIGURE F-6: ALTERNATIVE STEEL PLUG

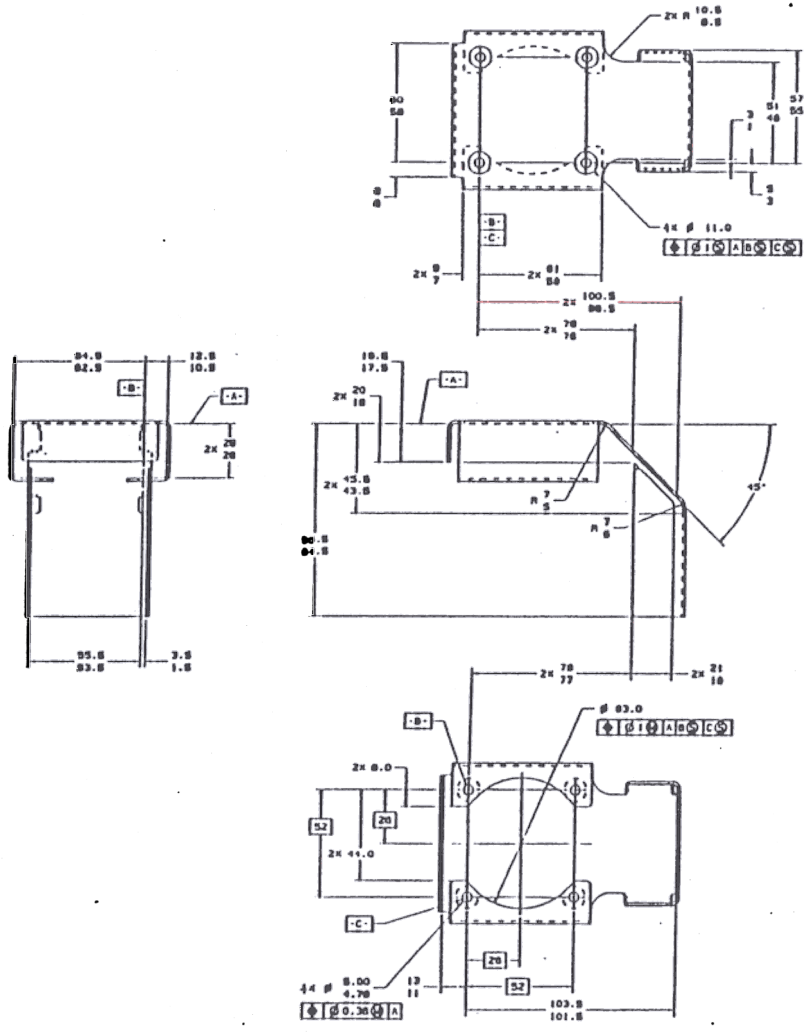

NOTES:

1) MATERIAL: .0598 INCH (#16 GA.) STEEL D.O.S.K PER ASTM A-620

2) UNSPECIFIED RADII: 2.0

APPLICABLE Z-SPECIFICATIONS:

Z-107 ZINC PLATING

Z-111 CHROMATE CONVERSION COATING

Z-284 METAL STAMPING TOLERANCE

DRAWING D-1: COVER PLATE

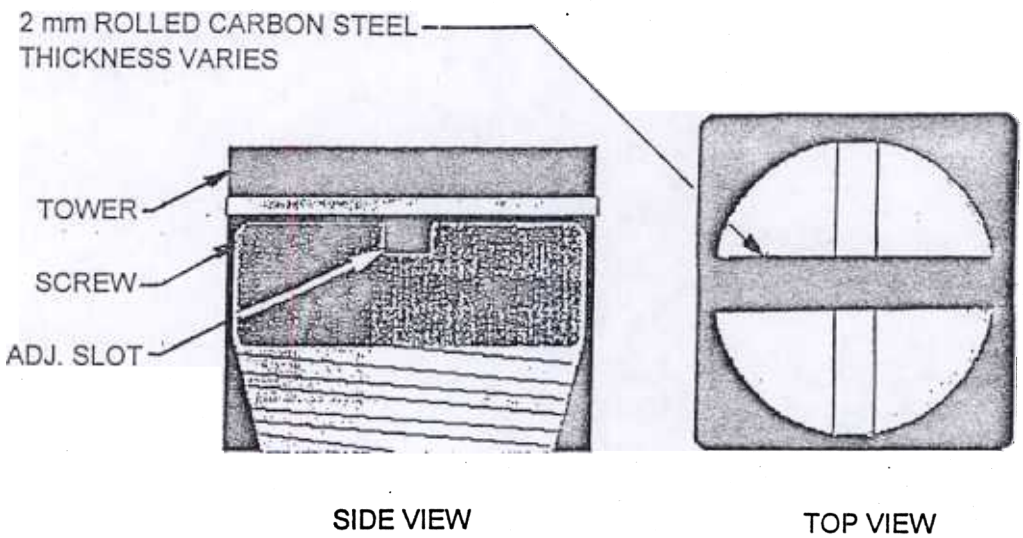

FIGURE F-8: ROLL PIN

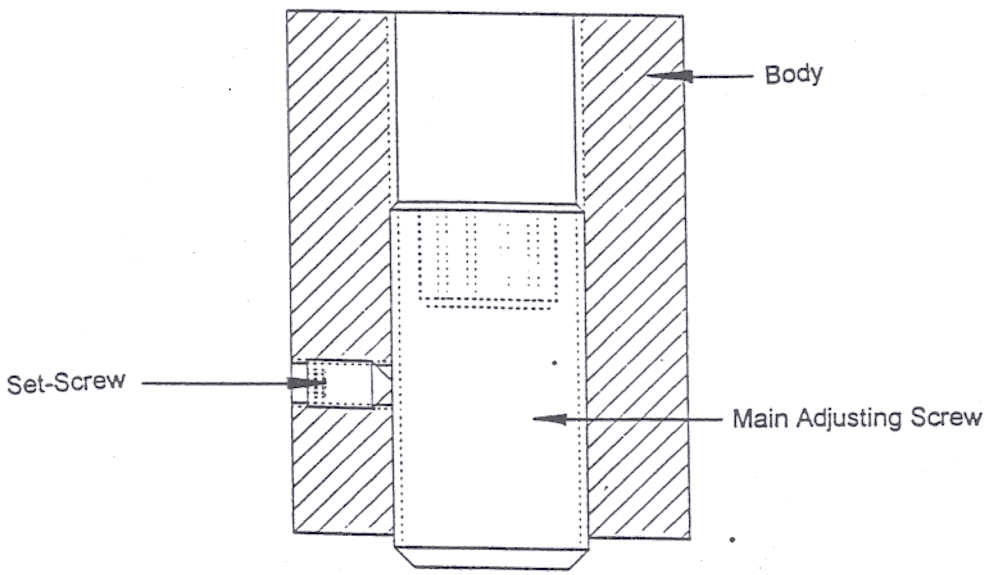

FIGURE F-9: SPECIAL-HEADED LOCKING-SET SCREW

Pan-Head Drilled Spanner

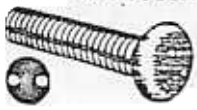

18-8 STAINLESS STEEL—The low-profile, large-diameter head gives you excellent driving power. Length is measured from under the head. Screw size and driver size are the same.

Flat-Head Drilled Spanner

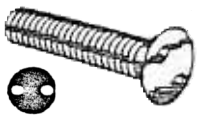

18-8 STAINLESS STEEL—Flat head sits flush with the surface when installed in a countersunk hole. Head angle is 82°. Length is measured from the top of the head. Screw size and driver size are the same.

Pan-Head Tri-Wing

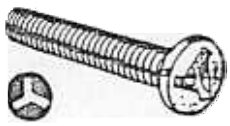

18-8 STAINLESS STEEL. Low-profile, large-diameter head gives you excellent driving power. Length is measured from under the head.

Round-Head Tri-Groove

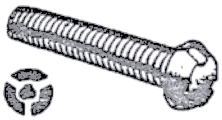

CASE HARDENED AND ZINC PLATED—Head protrudes above the material surface. Length is measured from under the head.

Break-Off Head

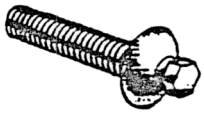

The hex head makes these screws easy to install—just tighten with a socket or wrench. Then break off the hex portion and a low-profile round head is all that remains. The screw cannot be removed unless it is drilled and removed with a screw extractor. Made from bar steel with black finish. Length is measured from under the head.

Flat Pin-in-Head Phillips

18-8 STAINLESS STEEL. The flat head sits flush with the surface of a countersunk hole.

Head angle is 82°. Length is measured from top of head.

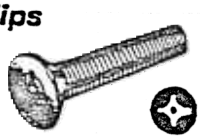

Pan Pin-in-Head Phillips

18-8 STAINLESS STEEL. The low-profile, large-diameter head provides excellent driving power and low clearance. Length is measured from under the head.

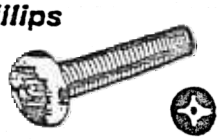

Flat Head and Button Head Pin-in-Head Torx

18-8 STAINLESS STEEL. Length is measured from the top of the head. Package quantity is 25.

Pan Head Notched Spanner

ZINC-PLATED STEEL. Length is measured from under the head.

FIGURE F-10: SPECIAL-HEADED FASTENERS

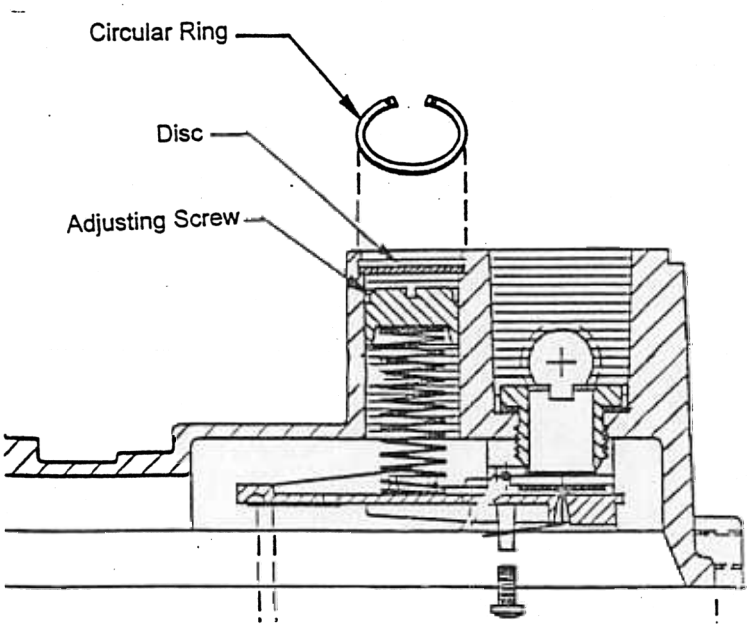

FIGURE F-11: CIRCULAR RING -- NOT ACCEPTABLE