FIGURE 1
TP-201.2 TEST POINTS

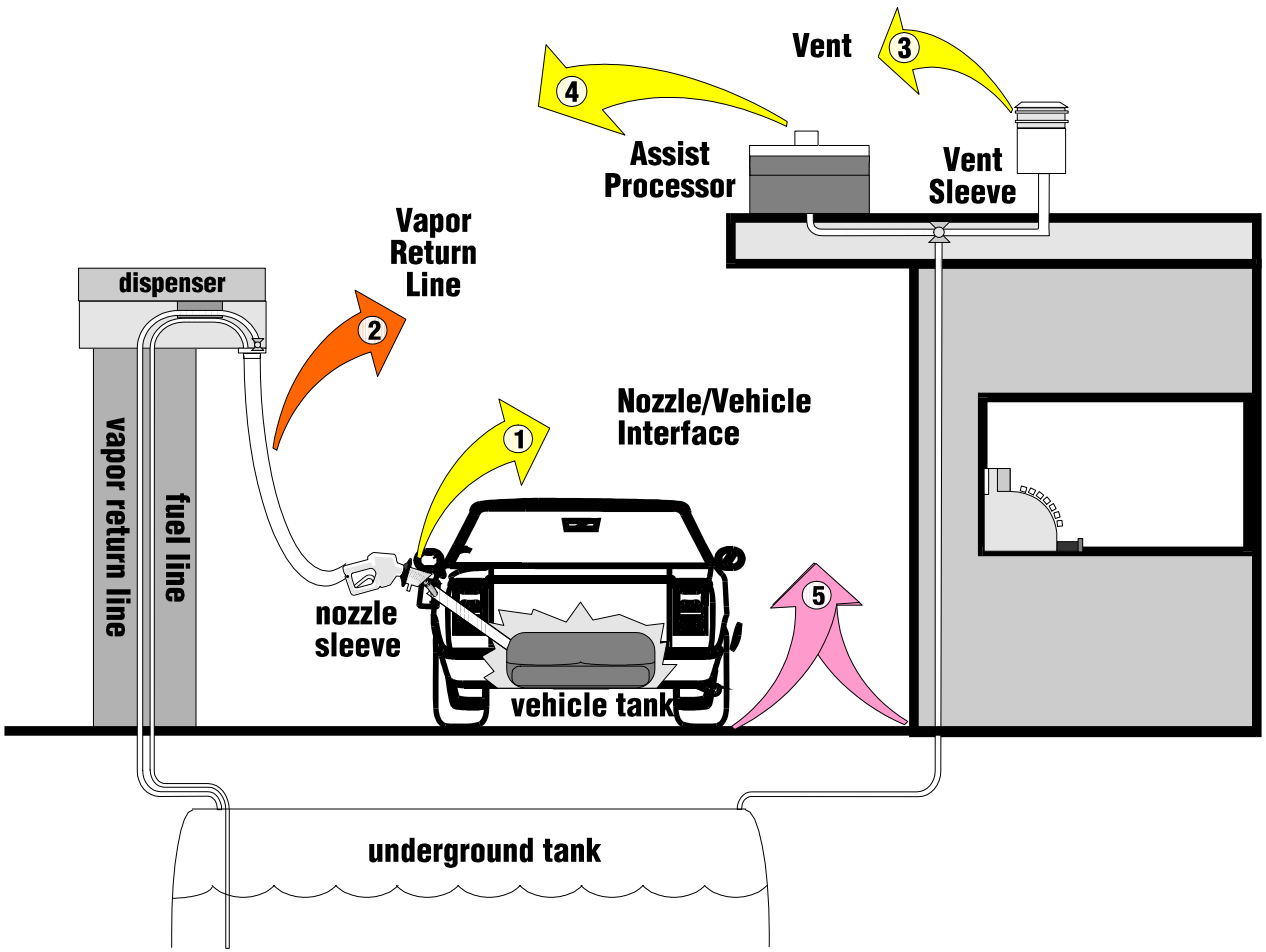

FIGURE 2
VEHICLE LEAK CHECK PROCEDURE (NITROGEN FLOW PRESSURIZATION)

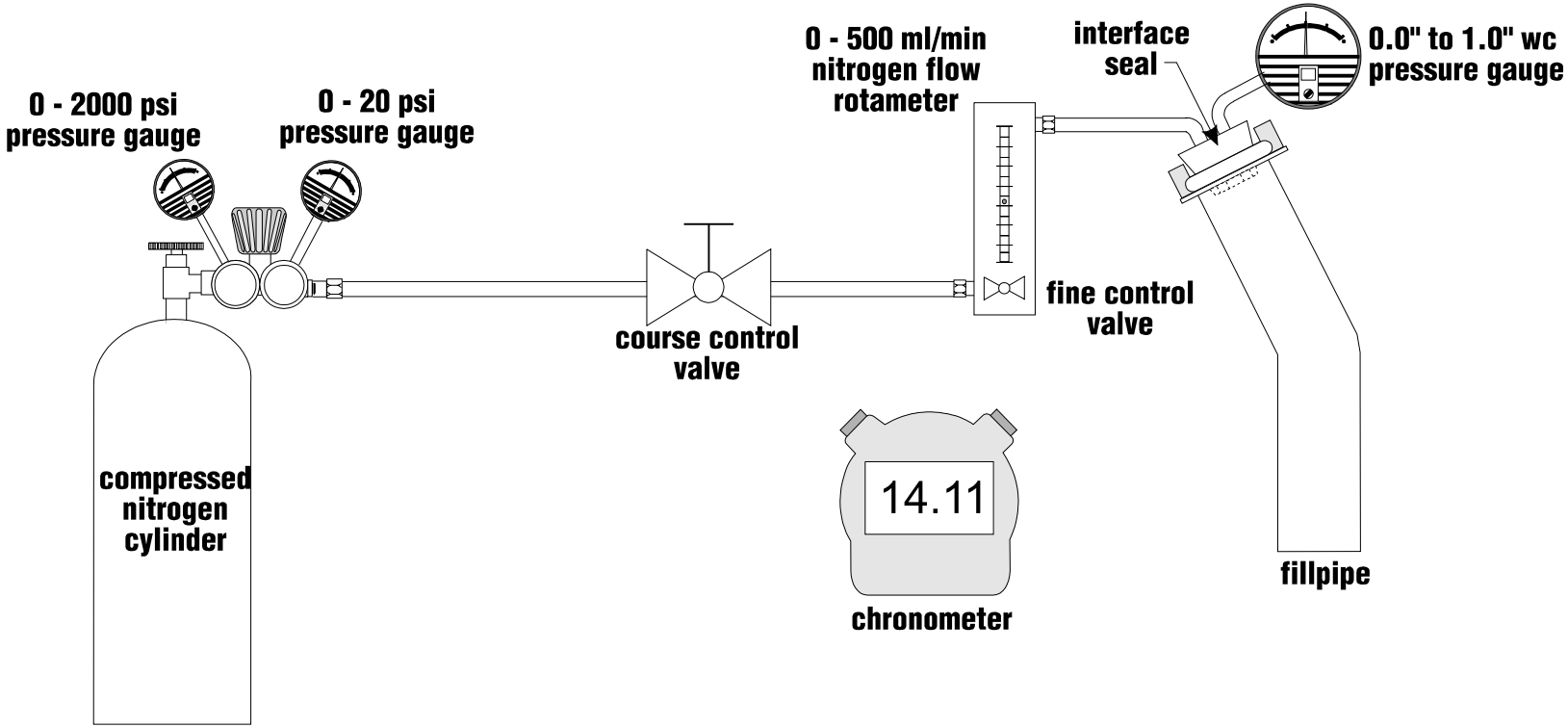

TP 201.2 F.3/NTA '00

FIGURE 3
NOZZLE SLEEVE ASSEMBLY (SECTIONAL VIEW)

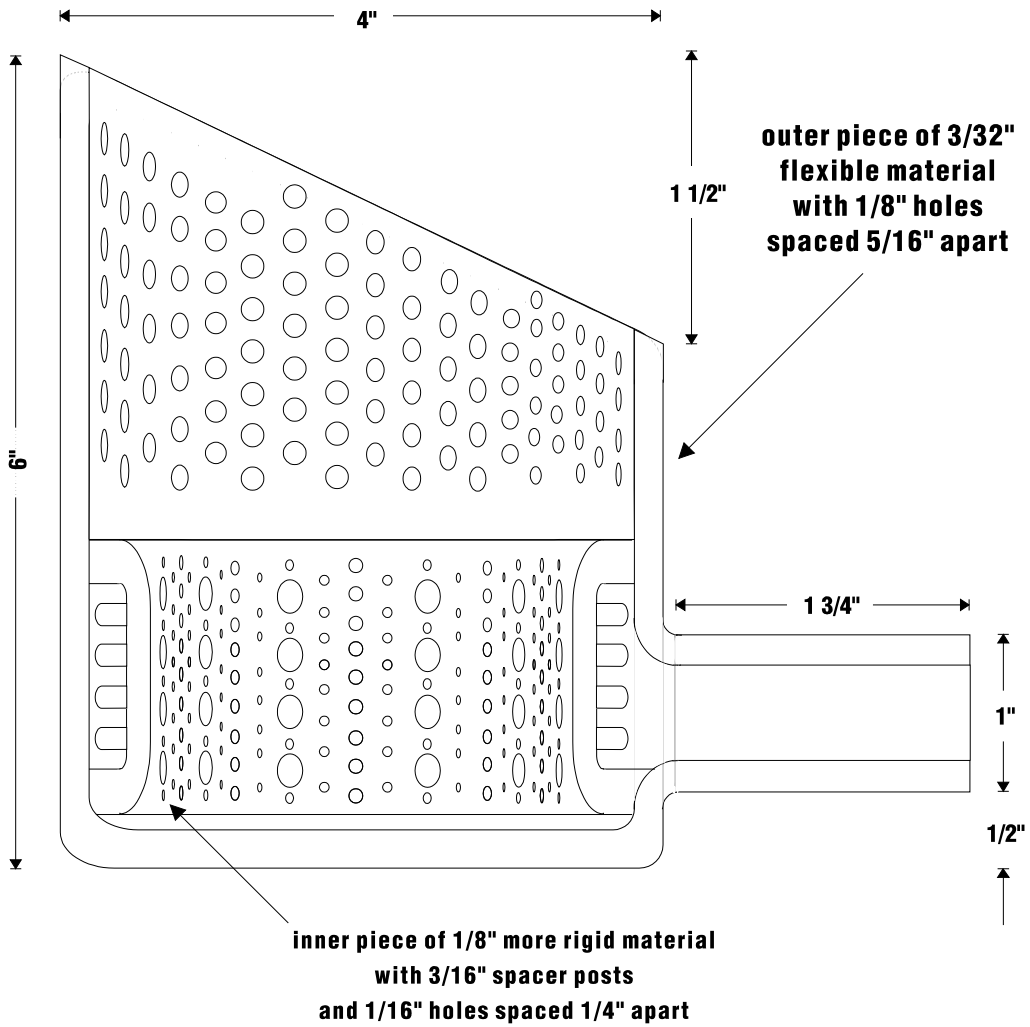

these dimensions are for example, and are not specifications

TP 201.2 F.6/ NTA '00

FIGURE 4
NOZZLE SLEEVE ASSEMBLY (AXIAL VIEW)

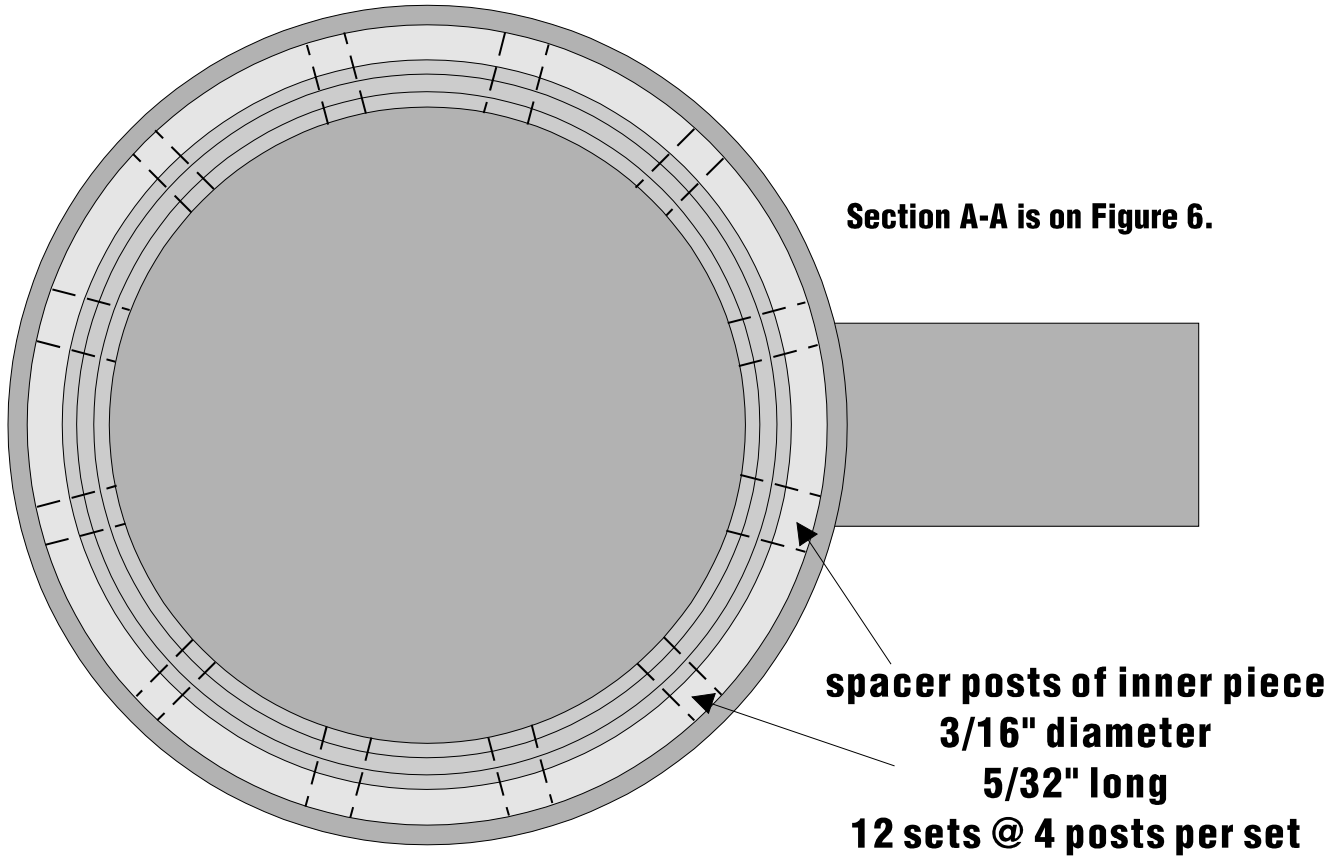

Materials must be resistant to breakdown by fuels and additives and easily bonded and repaired.

FIGURE 5
NOZZLE SLEEVE ASSEMBLY INSTALLED ON DISPENSING NOZZLE AT TEST POINT 1

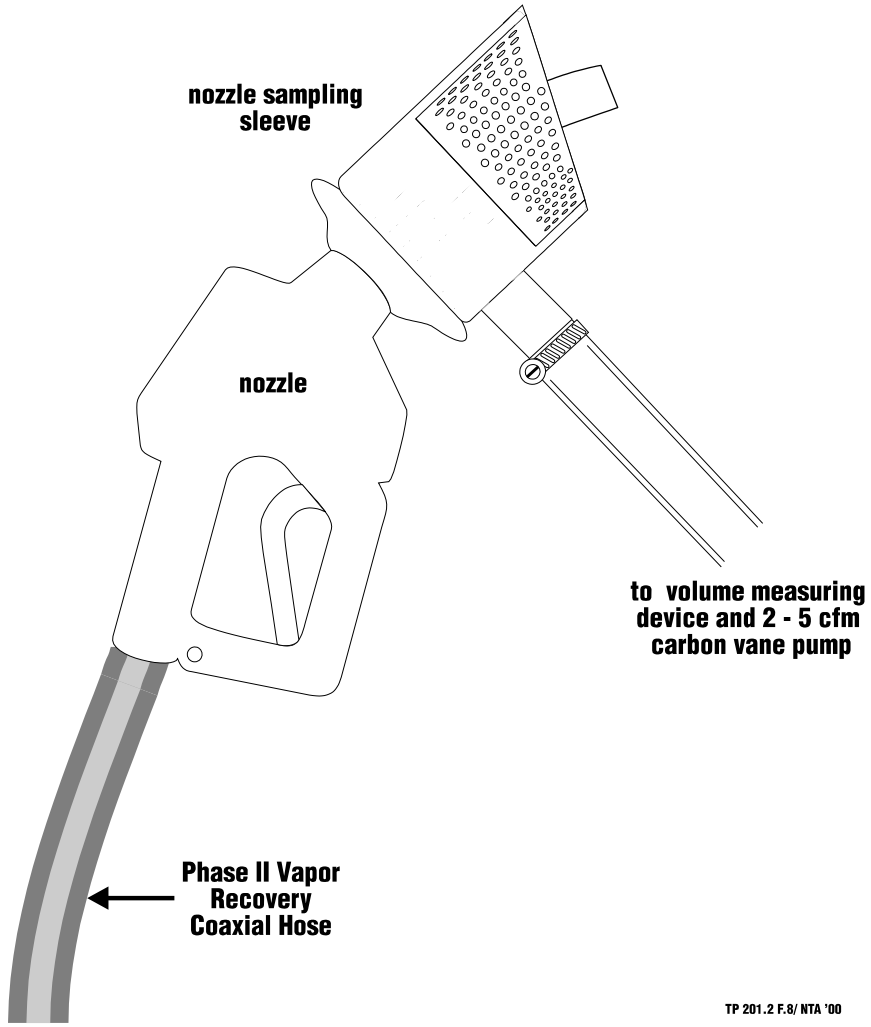

FIGURE 6
COMBUSTIBLE GAS DETECTOR USED FOR SLEEVE LEAK CHECKS

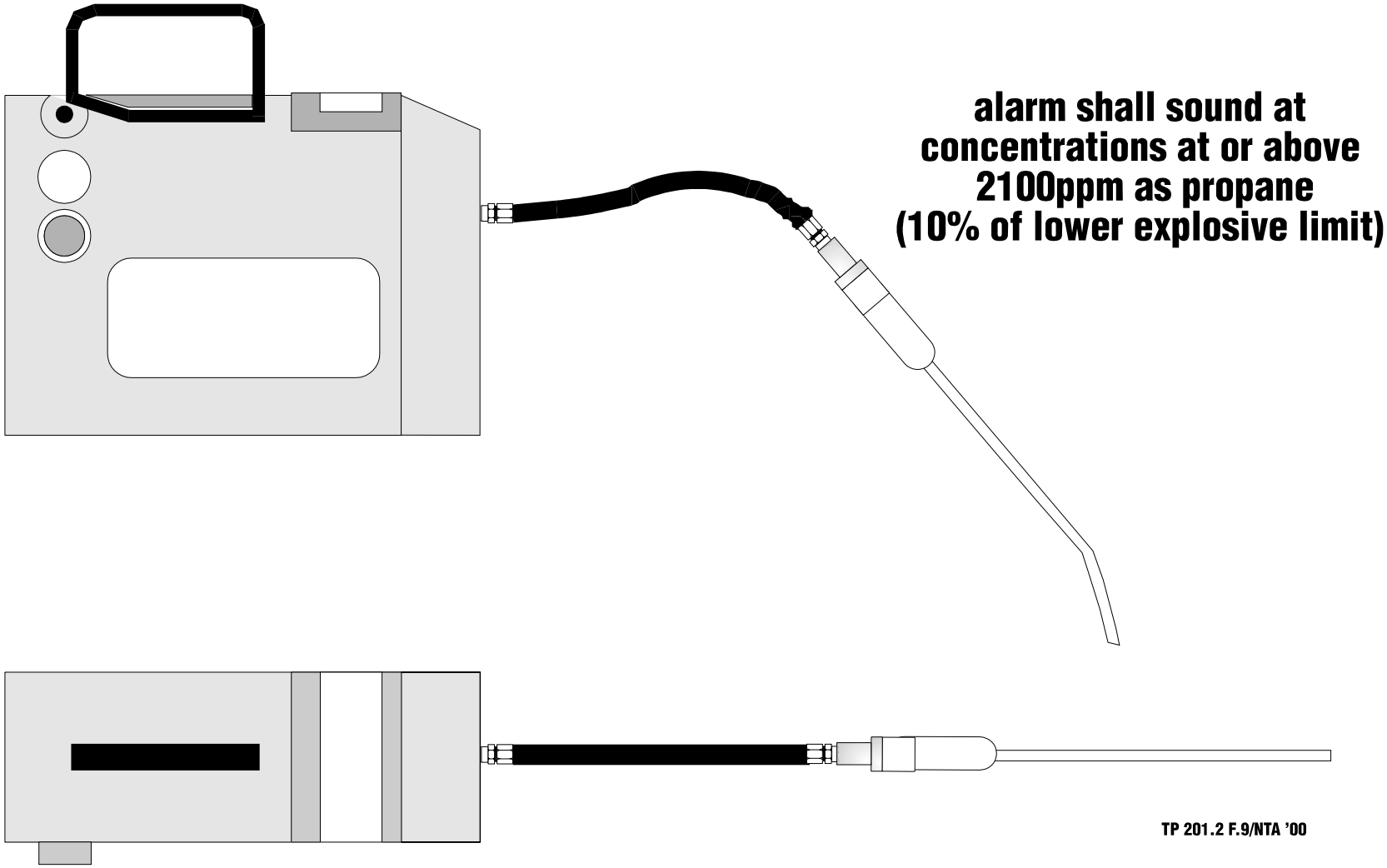

FIGURE 7
COMBUSTIBLE GAS DETECTOR IN USE DURING NOZZLE SLEEVE LEAK CHECK

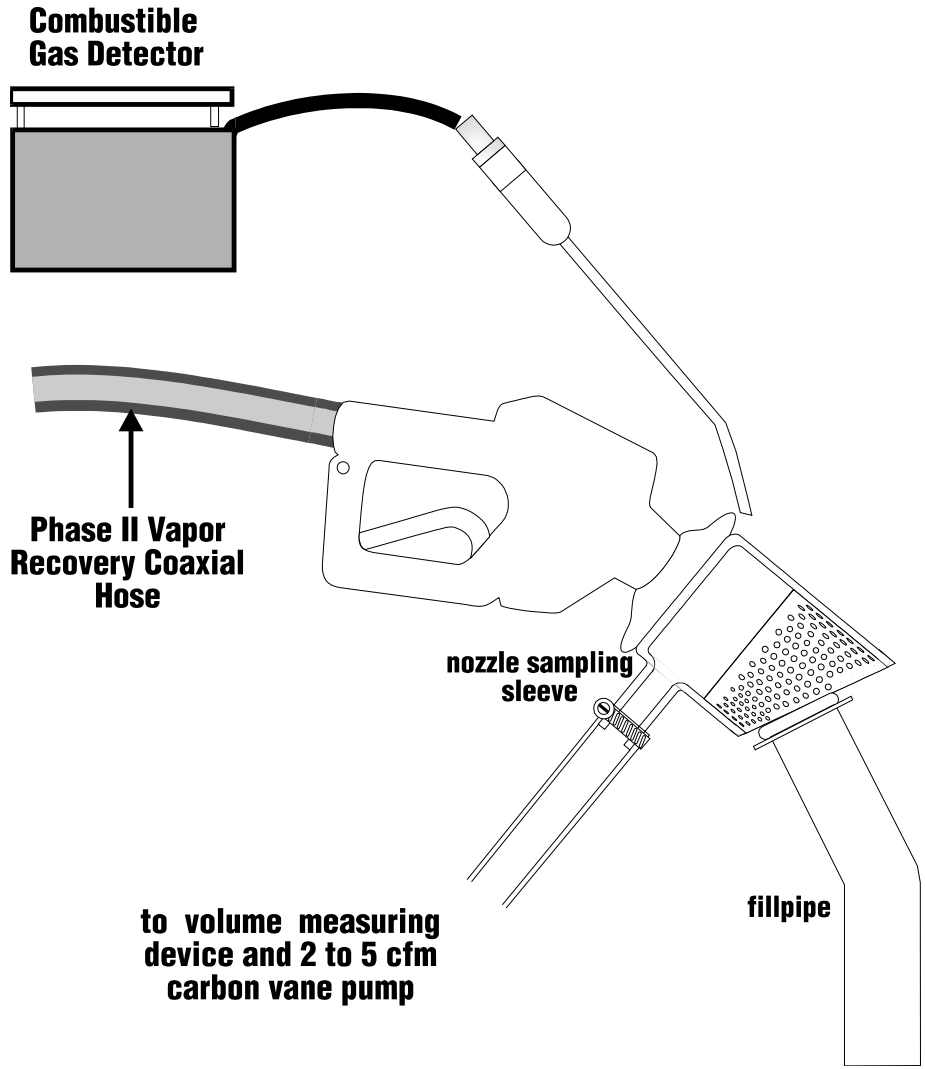

FIGURE 8
VAPOR RETURN LINE VOLUME MEASUREMENTS

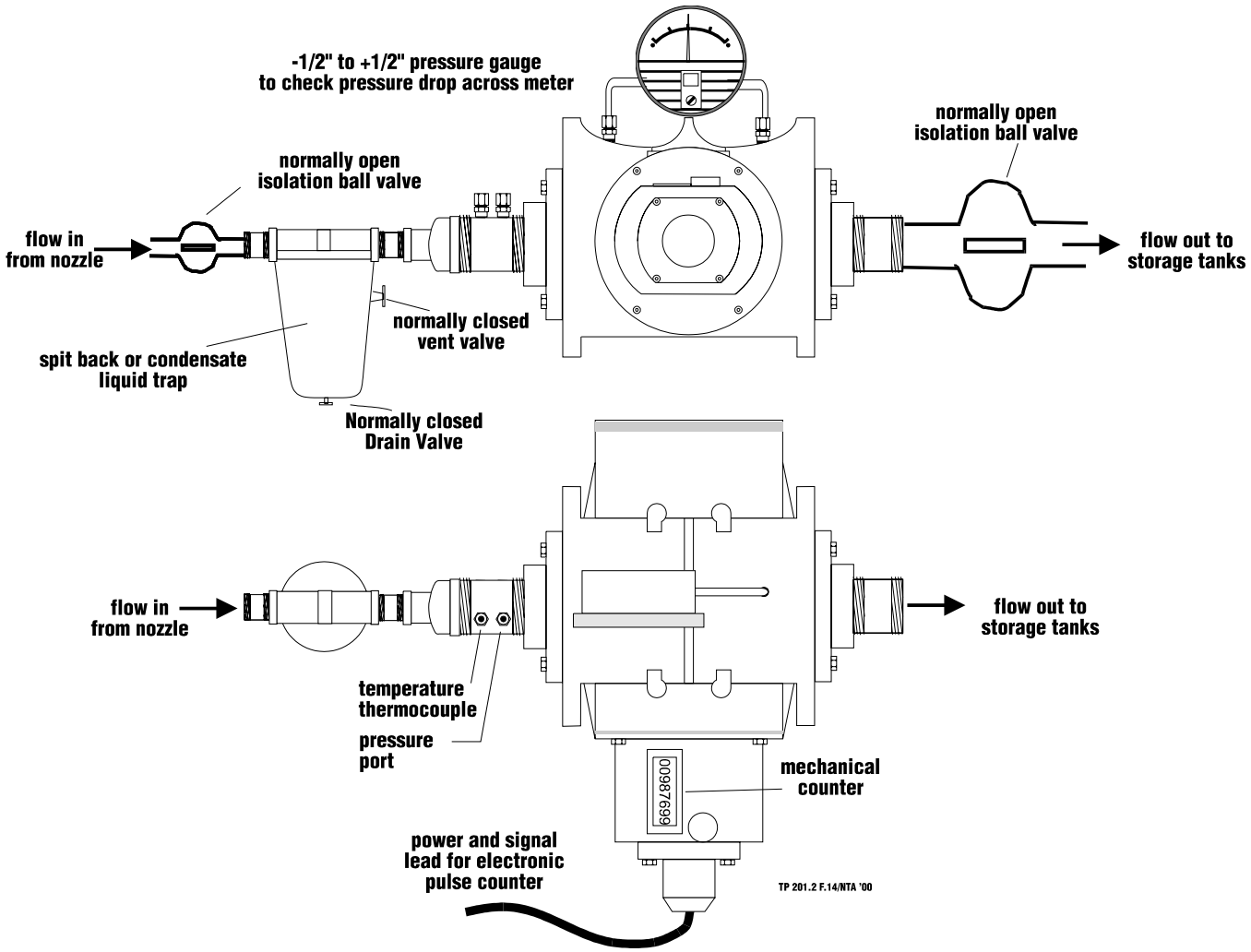

FIGURE 9
VAPOR RETURN LINE VOLUME MEASUREMENTS (SINGLE VR LINE)

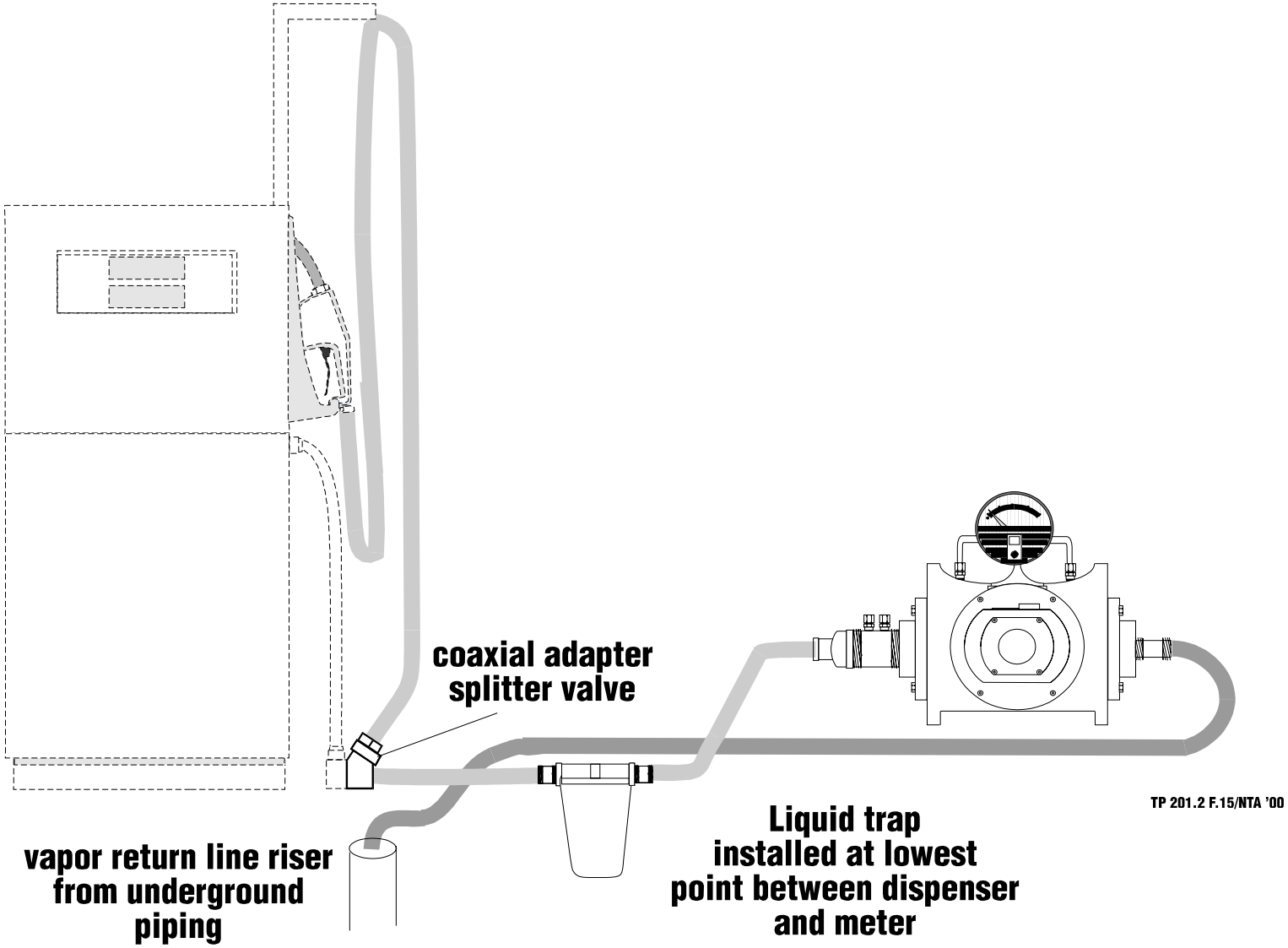

FIGURE 10
VAPOR RETURN LINE VOLUME MEASUREMENTS (VR LINES CONNECTED BY MANIFOLD)

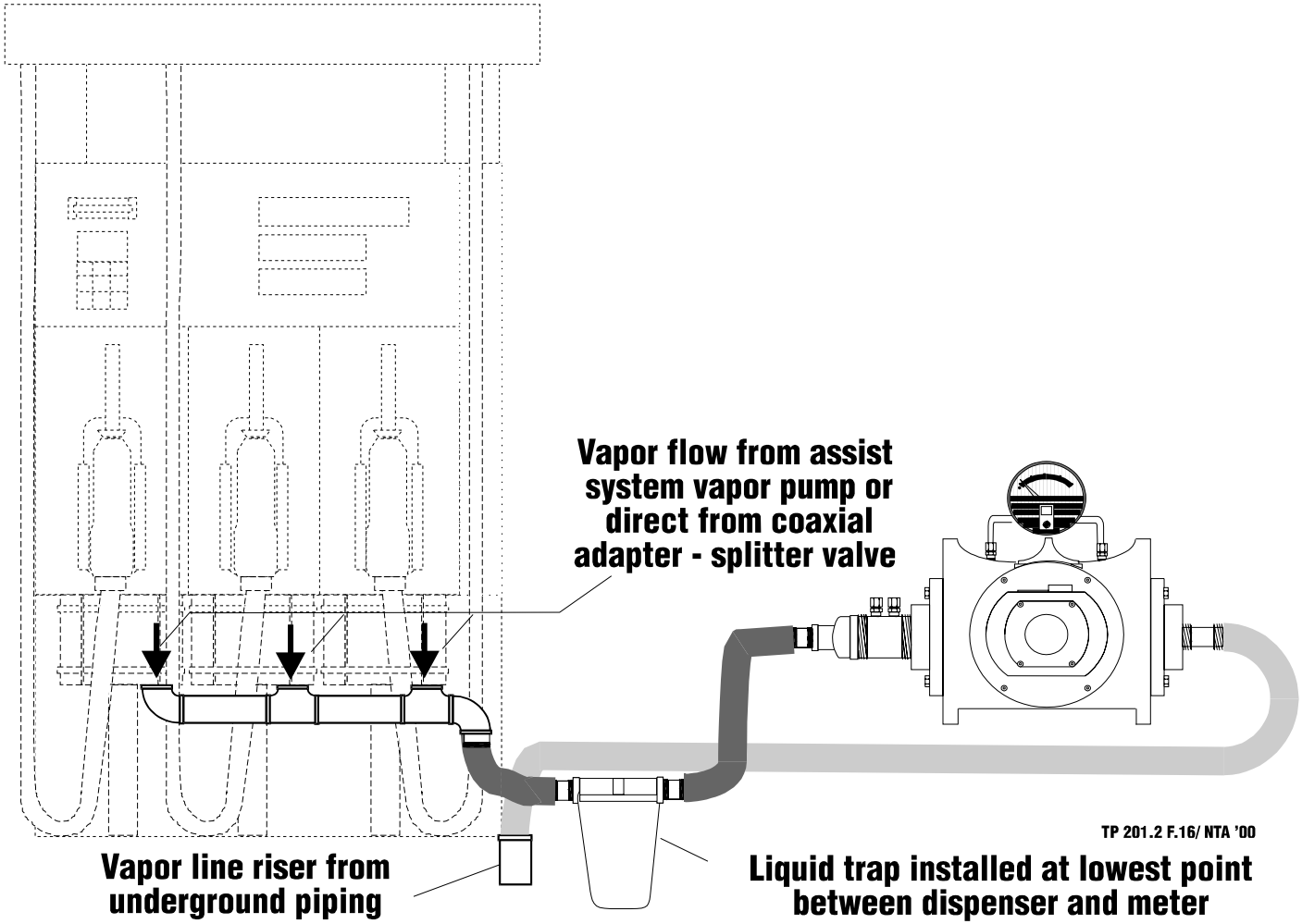

FIGURE 11
VAPOR RETURN LINE HC CONCENTRATION MEASUREMENTS

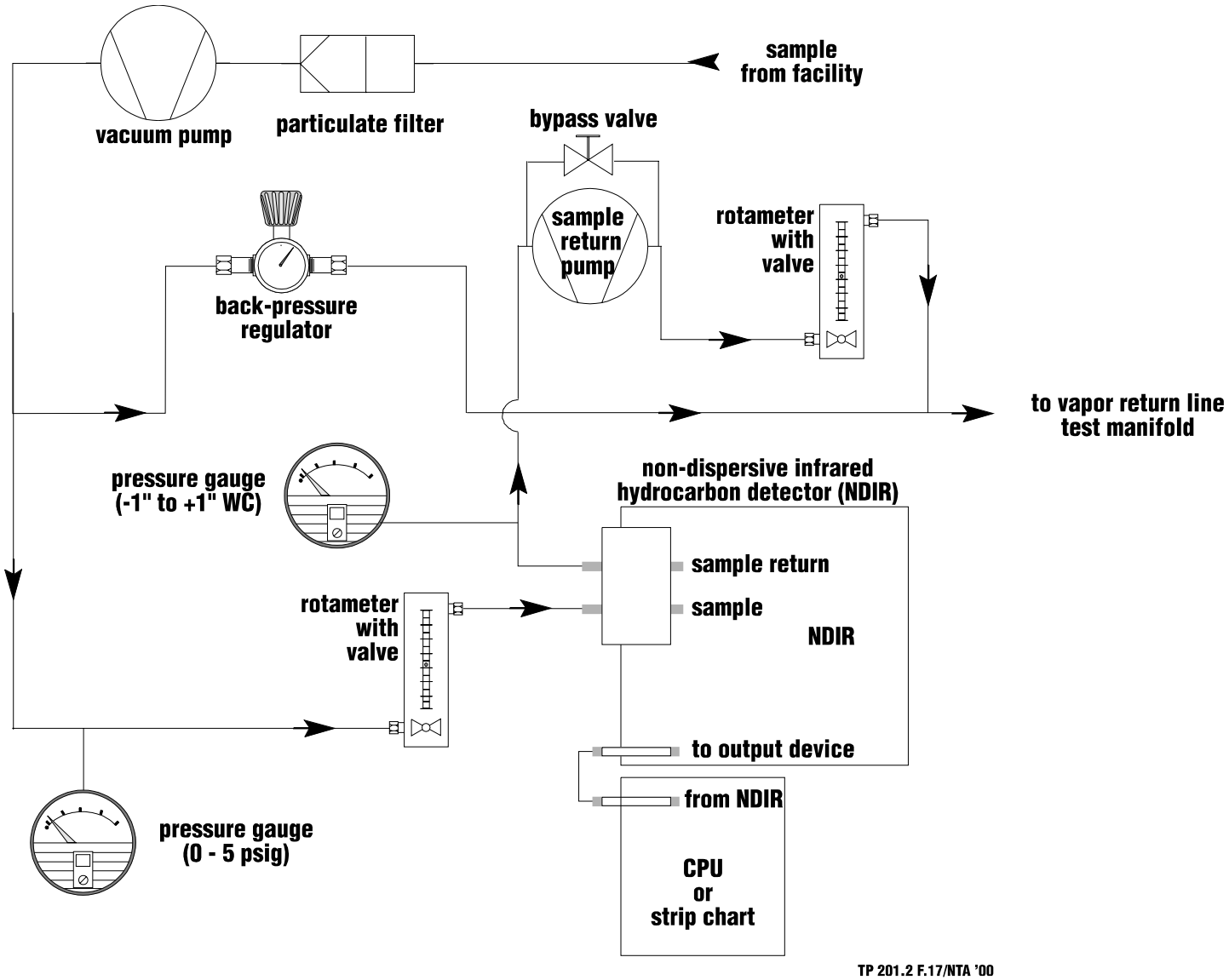

FIGURE 12
UST VENT PIPE SLEEVE ASSEMBLY

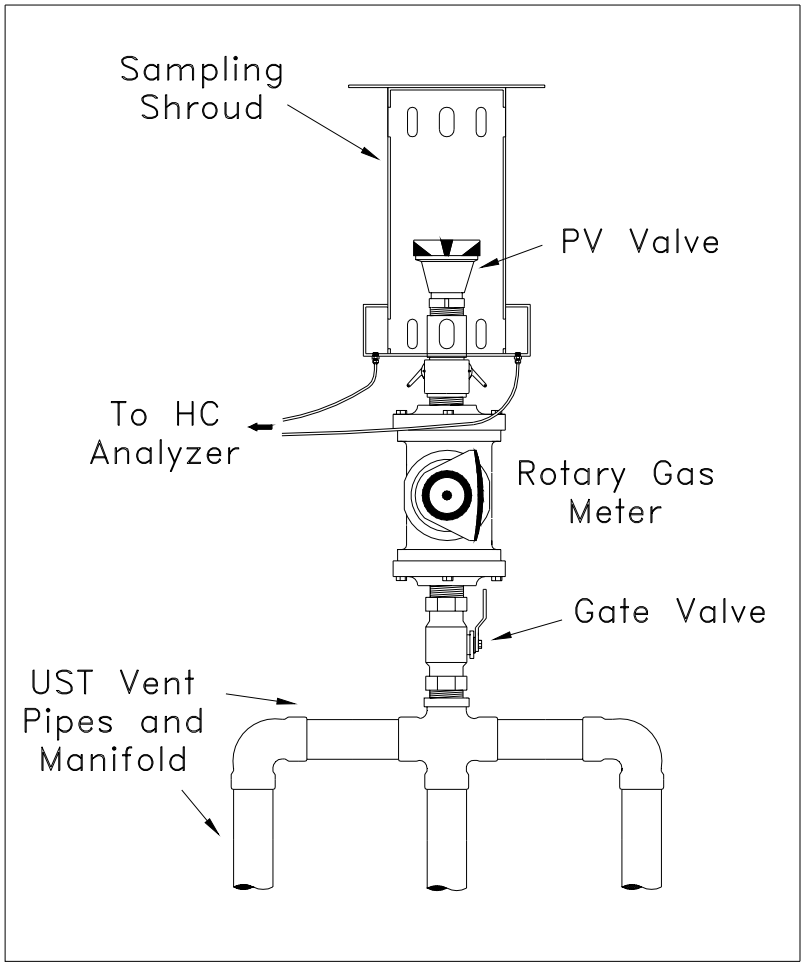

Figure 13 Test Site Vapor Recovery Equipment

Phase I Components

Fill Adapter Brand	Model	Serial	Installation Date	Warranty Exp. Date

Vapor Adapter Brand	Model	Serial	Installation Date	Warranty Exp. Date

Fill Cap Brand	Model	Serial	Installation Date	Warranty Exp. Date

Vapor Cap Brand	Model	Serial	Installation Date	Warranty Exp. Date

Drop Tube Brand	Model	Serial	Installation Date	Warranty Exp. Date

Spill Bucket Brand	Model	Serial	Installation Date	Warranty Exp. Date

Overfill Brand	Model	Serial	Installation Date	Warranty Exp. Date

PV Valve Brand	Model	Serial	Installation Date	Warranty Exp. Date

Other	Model	Serial	Installation Date	Warranty Exp. Date

Other	Model	Serial	Installation Date	Warranty Exp. Date

Phase II Components

Dsp. #	**Other**	Model	Serial	Installation Date	Warranty Exp. Date
1					
2					
3					
4					
5					
6					
7					
8					
9					
10					

Dsp. #	**Other**	Model	Serial	Installation Date	Warranty Exp. Date
1					
2					
3					
4					
5					
6					
7					
8					
9					
10					

Other	Model	Serial	Installation Date	Warranty Exp. Date

Other	Model	Serial	Installation Date	Warranty Exp. Date

FIGURE 14

VEHICLE REFUELING DATA SHEET

TP-201.2
DATA SHEET FOR TEST POINT 1

TEST ID: _____DATE: _____ DATA RECORDED BY:

VEHICLE INFORMATION

VEH.NO.	MAKE	MODEL	YEAR	MATRIX CATEGORY	ORVR?	TIME IN

REFUELING TEST DATA

LIQUID IN TRAP (N/Y [ml])	VEHICLE LEAK (cfm)	VEHICLE LEAK (P/F)	GAS GRADE	SLEEVE LEAK (P/F)	FUEL VOL (GAL)	FUELING TIME (SEC)	SLEEVE LIQUID (P/F[ml])	DISP RATE (GAL/MIN)

VOLUME METER READINGS

INITIAL METER (ACF)	FINAL METER (ACF)	METER TEMP (F)	METER PRESSURE (IN H2O)

COMMENTS: