State of California

AIR RESOURCES BOARD

TECHNICAL SUPPORT DOCUMENT

TO

PROPOSED AIRBORNE TOXIC CONTROL MEASURE FOR EMISSIONS OF HEXAVALENT CHROMIUM FROM CHROME PLATING AND CHROMIC ACID ANODIZING OPERATIONS

Prepared by:

Toxic Air Contaminant Control Branch
Stationary Source Division

Principal Investigators:

Gary Murchison, Manager, Process Evaluation Section
Clifford A. Popejoy
Richard Vincent
Frances Cameron

Contributing Divisions:

Research Division
Technical Support Division

Date of Release: January 4, 1988
Date of Proposed Action: February 18, 1988

This report has been reviewed by the staff of the Air Resources Board and approved for release. Approval does not signify that the contents necessarily reflect the views and policies of the Air Resources Board; nor does mention of trade names or commercial products constitute endorsement or recommendation for use.

Contents

		Page
I.	INTRODUCTION	1
II.	CHROME PLATING INDUSTRY	
	A. PROCESS DESCRIPTION	2
	B. PLATING SHOPS IN CALIFORNIA	3
	C. EXISTING REGULATIONS AFFECTING PLATERS	4
III.	EMISSIONS OF CR(VI) AND EXPOSURE	
	A. EMISSIONS	6
	B. EXPOSURE AND RISK	12
IV.	CONTROLS FOR PLATING EMISSIONS	
	A. DEMONSTRATED CONTROLS, HARD PLATING	21
	B. DEMONSTRATED CONTROLS, DECORATIVE PLATING	25
	C. OTHER POSSIBLE CONTROLS	26
	D. ACHIEVABLE CONTROL EFFICIENCY	32
V.	PROPOSED CONTROL MEASURE	
	A. BASIS AND SUMMARY OF PROPOSED REQUIREMENTS	36
	B. REDUCTION OF RISK AND CANCER INCIDENCE	44
VI.	COST OF PROPOSED CONTROL MEASURE	
	A. COSTS TO PLATING SHOPS	46
	B. COST-EFFECTIVENESS	48
	C. EFFECT ON PRICES	50
	D. EFFECT ON SMALL BUSINESSES	53
	E. COST TO AIR POLLUTION CONTROL DISTRICTS	54
	F. ENVIRONMENTAL EFFECTS	58
VII.	ALTERNATIVES TO CONTROL MEASURE	
	A. DECORATIVE PLATING	61
	B. HARD PLATING AND CHROMIC ACID ANODIZING	62
VIII.	COMMENTS ON DRAFT PROPOSAL; RESPONSES	65
REFERENCES		

APPENDICES

I. SURVEY SENT TO PLATERS 74

II. COST ESTIMATION 79

III. APCD PERMIT FEES 87

IV. AIR QUALITY MODELING 98

V. TEXT OF PROPOSED CONTROL MEASURE 144

VI. IDENTIFIED SHOPS AND EMISSIONS 151

VII. ACTUAL VS. AMBIENT EXPOSURE 158

VIII. FINANCIAL ANALYSIS OF SMALL PLATING COMPANIES 160

I. INTRODUCTION

Chrome finishes are applied to industrial and consumer goods by electrolytic deposition (plating) from solutions of chromic acid (hexavalent chromium). Mists generated from the plating tanks are captured by ventilation hoods and emitted to the ambient air. The hexavalent chromium (Cr(VI)) emitted in this way is a major contribution to ambient concentrations of Cr(VI), and it creates considerable exposure to the populations surrounding plating shops.

The Health and Safety Code (Section 39666) requires the Air Resources Board (ARB) to adopt regulations for emissions of a pollutant, like Cr(VI), that has been identified as a "toxic air contaminant." Usually, such a regulation requires the best available control technology for a particular kind of source of the pollutant. However, the ARB may adopt requirements for greater or lesser control as needed to protect the public health.

This report presents the ARB staff's analysis of emissions of Cr(VI) from chromium plating and the resulting exposure and risk (of cancer) to the affected population. It discusses the demonstrated technology for reducing emissions and the costs and effects of requiring the reduction that the technology can achieve. Finally, the report presents and explains the provisions of a proposed control measure (regulation). If adopted by the ARB, the control measure would be sent to air pollution control districts for adoption as locally enforceable regulations.

II. CHROME PLATING INDUSTRY

A. PROCESS DESCRIPTION

Chromium is "plated" onto the metal surfaces of a multitude of industrial and consumer goods. About 30% of plated chromium is applied as "decorative plating", which typically is a 0.25-micron (10^{-5}-inch) protective and decorative surface applied to auto parts, appliances, furniture and plumbing fixtures. About 60% is applied as "hard" plating, a wear- and corrosion-resistant working surface from 10 to 300 microns (10^{-4} to .01 inch) thick on industrial parts like tools, pump shafts, rollers, and crank shafts. (The relative amounts of chromic acid were estimated from responses to surveys described in Chapter III and shown in Appendix I.) Much of the hard plating is done to restore worn items. About 10% of the chromium use is for chromic acid anodizing, wherein an oxide is created on the surface of an aluminum or magnesium part in an electrolytic bath of chromic acid.

Both hard and decorative plating occur in tanks bearing chromic acid and a catalyst ion (usually sulfuric acid). The item to be plated is suspended in the acid bath and connected as the cathode (negative electrode) of an electrolytic cell. A low DC voltage applied across the cell causes hexavalent chromium to deposit as metallic chromium on the item. At the same time, water decomposes to produce hydrogen and oxygen gas. This undesired phenomenon consumes 80 to 90 percent of the current. The gas bubbles bursting at the surface of the bath create a mist of chromic acid. To protect employees, the mist is collected by ventilation systems and conveyed to the outside atmosphere. In some cases, the mist is passed through scrubbers or de-misters

that capture and recycle the acid. The residual mist, bearing Cr(VI), is released to the ambient air.

In anodizing, the metal part is connected as the anode (positive electrode) in the cell. As Cr(VI) is reduced in the bath, the metal surface oxidizes to provide a protective finish. The same phenomenon of hydrogen evolution produces a chromic acid mist.

B. PLATING SHOPS IN CALIFORNIA

Typically, decorative plating shops are part of larger manufacturing facilities. Hard chrome shops are often independent jobbers serving the aerospace, oil production, transportation, and other industries.

Table II-1 shows the number of platers of various kinds that the staff has estimated for the populous areas of California. Of the total of 416 platers, 65% are in the South Coast Air Basin.

Table II-1

Estimated Numbers of Chrome Platers

Air Basin	Numbers of Platers	
	decorative	hard/anodizing
South Coast[1]	154	119
Bay Area[2]	26	19
San Diego[3]	18	20
San Joaquin Valley[4]	21	6
Sacramento Valley[3]	15	4
So. Central Coast[3]	6	6
Others[3]	2	0
Total	242	174

Sources of data: (1) survey by SCAQMD (2) survey by BAAQMD (3) phone directory (4) survey by San Joaquin Co. APCD

C. EXISTING REGULATIONS AFFECTING PLATERS

1. Air Pollution

The South Coast Air Quality Management District (SCAQMD) is the only air pollution control district to require permits for plating. The District requires wet scrubbers, baffle mist eliminators, or mesh pads on most plating tanks that have ventilation systems. These are required on the basis of Health and Safety Code 41700, which prohibits emissions endangering health or creating a nuisance. New or modified plating operations will have to comply with proposed SCAQMD Rules 223 (Air Quality Impact Analysis) and 1401 (New Source Review of Known and Suspected Carcinogenic Air Contaminants), if these rules are adopted.

Many platers in other areas of the state equip their tanks with scrubbers or demisters despite the lack of permits or rules addressing plating emissions.

The EPA is scheduled to propose New Source Performance Standards for chrome plating in 1989. The standards would not affect existing emissions. The Bay Area AQMD may require permits for platers in the future.

2. Water Pollution

A plating operation may generate wastewater that must be treated to remove chromium before disposal in a sewer or a stream. Thus, platers often have treatment plants on site. This is especially true of decorative platers because they use a series of tanks for cleaning, etching, and rinsing steps that are not used by hard platers. This leads to the production of more wastewater than can be recycled as make-up water. Hard platers, on the other

hand, often produce little enough wastewater that, in daily operation, it can all be recycled. Some hard platers do have treatments plants, however.

If a plater must discharge chromium-laden water, the following standards apply to the total chromium concentration:

	New Source	Existing Source
EPA - daily max	2.77 mg/l	7.0 mg/l
- monthly avg.	1.77 "	4.0 "
Local		0.5 to 10 mg/l

3. Workplace

The Occupational Health and Safety Administration limits the concentration of Cr(VI) in the breathing air of employees to 0.05 mg/m^3 averaged over eight hours. Hard platers usually achieve compliance with ventilation systems built into the plating tanks to carry away mist. Decorative platers may also use ventilation, but some instead (or in addition) add a mist-suppressant to the chromic acid. This either prevents the formation of mist or creates a blanket of foam that knocks out much of the acid mist before it can escape the tanks.

III. EMISSIONS OF CR(VI) AND EXPOSURE

A. EMISSIONS

The staff estimated emissions of Cr(VI) from plating as the product of an average emission factor (grams per amp-hour), a typical current (amps) for each tank, and the number of hours of operation of each tank.* The data on current and hours of operation were acquired by a mail survey of all known platers in the Bay Area, South Coast, and San Diego Air Basins and a telephone survey of platers in the San Joaquin Valley Air Basin. About 63 percent of all survey recipients responded. We have assumed that the data from the non-respondents have the same statistical distributions as the data from the respondents in each air basin. Appendix 1 displays the survey form. Appendix VI shows the plating shops identified by the survey.

On the basis of source test data, separate emission factors were developed for hard plating or anodizing and for decorative plating, with or without control. (Control is usually by a low-energy wet scrubber and/or a demister.) We assumed that typical emissions from anodizing are equal to those of hard plating. The single source test result for anodizing supports this assumption.

Table III-1 tabulates the source test data used to develop the emission factors. Most tests reported emissions of both total chromium and Cr(VI). In

---

* The single exception to this method is for emissions from Standard Nickel Chromium Plating. Actual source test results were applied for some of the tanks at Standard.

Table III-1
Results of Source Tests at Plating Tanks

Plant	Location	Ref.	Annual Cr. Emissions (lbs.)	Emissions, mg/amp-hr uncontrolled[a]	Emissions, mg/amp-hr controlled	Control Efficiency
Hard Plating						
Able Machining	So. Carol.	1	9.0	9.1(9.1)[b]	.15 (.14)	98%
Steel Heddle	So. Carol.	2	9.9[d]	13.1 (13.9)	.50 (.450	96%
Greensboro Indust.	No. Carol.	3	25[d]	4.9 (4.3)	.61 (.59)	88%
Carolina Plating	No. Carol.	4	11[d]	2.3 (1.1)	.15 (0.44)	93%
U.S. Navy	Long Beach	5	5.4[d]	1.9 (1.9)	.15 (.15)	89%
U.S. Navy	Virginia	6	3.0[d]	3.7 (3.7)	.14 (.14)	95%
Tarby	Hunt. Bch.	7	11[d]	9.5 (1.5)	.23 (.06)	98%
Standard	Los Angeles	8	62	.082 (.057)	.040(.039)	51%
Ni-Cr	"	9	170	.17 (.1)[c]	.11 (-)	35%
Plato Products	Glendora	10	.54[d]	--	.04 (.02	43%
Chrome Crankshaft	Southgate	11	9.0[d]	--	--	98%
Pamarco	Orange	12	10	1.8 (1.8)	.99 (.99)	44%
"	"	13	.2	.73 (.54)	.02 (.01)	97%
Embee Plating	Santa Ana	14	3.8[d]	--	--	79%
Piedmont Indus.	No. Carol.	24	3.9[d]	23 (24)[c]	.14 (.14)	99.4%
Dec. Plating						
C.S. Ohm	Missouri	15	.29	.049 (.011)	--	
"		15		.007 (.002)	.010 (.002)	0%
Price-Pfister	Pacoima	16	.73	.019 (.021)	.015 (.007)	21%
"	Pacoima	17	1.4	.14 (.14)[c]	.029 (.029	79%
Anodizing						
Confidential until further notice			.018	1.9 (1.1)	.16 (.091)	94%

a before control device
b values ex-( ) are total chromium; values in ( ) are Cr(VI)
c data not used for emission factor
d assuming 3,000 hours of operation per year

some cases, the measurements of emissions of Cr(VI) were less than those of total chromium. This suggests a relative bias between the two measurements because the chromium in the baths should be at least 99% Cr(VI) for proper plating. We have used the data for total chromium emissions as a surrogate for Cr(VI) to avoid a low bias in the emission factor and the estimates of exposure. However, for the anodizing source test, we used the measured emissions of Cr(VI) because anodizing baths are known to contain Cr(III) as well as Cr(VI).

We have expressed the source test results and the emission factors in terms of weight emitted per amp-hour. Amp-hours should be a normalizing variable because, in any tank, the amount of mist created should be proportional to the amount of hydrogen evolved, which should be proportional to the current (amps) and to the length (hours) of a plating job. However, other variables like the geometries of the tank and the plated item, the surface tension of the solution (affected by composition and temperature), and the electrical efficiency (chromium plated per amp-hour) probably affect emissions also. Therefore, the sizeable ranges of emissions from hard platers evident in Table III-1 is not surprising.

The uncontrolled emissions of Cr(VI) from decorative platers in Table III-1 are on the order of one percent of uncontrolled emissions from hard platers, per amp-hour. Apparently this is the effect of anti-mist additives that decorative platers usually maintain on their baths to control the concentration of Cr(VI) in the workplace. EPA has estimated the effectiveness

of such foams as 90 to 99 percent. However, there may be other factors behind the low emission rates from decorative plating.

The data for uncontrolled emissions at Standard Nickel/Chromium and the unidentified plater were not included in the development of the hard plating emission factors. These were the highest and lowest data, by considerable margins. The mean of all other data for uncontrolled emissions from hard plating is 5.28 mg/amp-hour. This value was used as the emission factor for uncontrolled sources. The average efficiency of control among the source tests at hard plating shops is 94%. However, the average control efficiency among just the tests in California is only 75%. We have employed this value to estimate emissions from controlled hard plating operations. For plating shops that use controls, we have used 25% of the average uncontrolled emission factor, or 1.3 mg/amp-hour, to estimate emissions. For tanks that employ mist-reducing foam blankets, we have used .26 mg/amp-hour.

All tests at decorative shops were done while foam blankets were used. The mean emission rate was 0.025 mg/amp-hour. The few data for control efficiency at decorative shops do not establish a reliable value. We have used 75 percent control for shops having scrubbers and 95 percent control for shops using foams, the same values used for hard plating.

Table III-2 summarizes the emission factors used in this report.

Table III-3 shows emissions of Cr(VI) for the shops with the highest, lowest, and median emissions. These emissions were calculated with the average emission factors in Table III-2 and site-specific data on current and hours of operation. The large differences between the hard and decorative

Table III-2

Cr(VI) Emission Factors[a] for Plating Emissions
(mg/amp-hour)

	Uncontrolled	Controlled	
		scrubber	foam[b]
Hard plating anodizing	5.2	1.3	.26
Decorative plating	0.50	.13	.025

a based on data for total chromium
b foam or foam plus scrubber

examples reflect the emission factors in Table III-2 and the fewer hours of operation typical of decorative plating shops. The large range within each category, three to four orders of magnitude, reflects the range of size of the shops. As a result, the risks and theoretical cancer burdens in surrounding populations vary greatly among the individual sources.

Table III-3 also shows cumulative emissions in each category. Despite the presence of controls (assumed 75 percent efficient), the number and size of controlled hard plating shops cause their emissions to strongly dominate all other categories.

Table III-4 tabulates the total emissions of Cr(VI) from plating in the populous air basins of California. The statewide emissions of 12,000 pounds are roughly 30 percent of the current estimate of total emissions of Cr(VI) from all source categories. Ninety-four percent of plating emissions occur from hard plating. Sixty-four percent occur in the South Coast Air Basin.

Table III-3

Distribution of Emissions of Cr(VI)
(pounds per year per shop)

	Decorative	Hard	Anodizing
Shops that do not control emissions[a]			
lowest	.001	.077	.60
median	.092	11	6.7
highest	31	510	170
all[b]	122	1,900	320
Shops that control emissions			
lowest	.006	.002	.006
median	.10	20	.44
highest	.72	1,200	22
all[a]	11	9,800	98

[a] "Control" refers to a scrubber or de-mister.
[b] in state

The staff expects emissions from decorative plating to not increase much in the foreseeable future. Foreign competition limits the industry's growth potential. Hard plating and anodizing are assumed to have market potentials that will grow with general manufacturing activity. However, due to the risks associated with even moderately large operations (discussed in the next section), expansion of the industry in the urban areas is questionable. Obtaining permits for new or expanded plating operations will likely be difficult. Therefore, any increase in emissions (assuming no new control

requirements) may be largely in rural areas rather than the South Coast, Bay Area, or San Diego Air Basins.

Table III-4

Emissions of Cr(VI) from Plating[a]
(lbs/year)

Air Basin	Plating Type		
	hard	decorative	anodizing
Bay Area	1,910	8.1	6.7
Sacramento	427	0.	0.
San Diego	1,340	8.0	536
San Joaquin	72	.55	0.
South Central Coast	14	0.	2.1
South Coast	7,730	117	76.6
Total	11,500	133	620

a based on survey responses; adjusted for response rate

B. EXPOSURE AND RISK

The exposure of the populace to Cr(VI) can be analyzed in two components--the general ambient concentration experienced rather uniformly across an air basin and the highly localized elevated concentrations experienced near individual sources of Cr(VI). The general concentration may be estimated from data obtained by the ARB's fixed-site monitoring system. This system and its data on Cr(VI) are discussed in Hexavalent Chromium Control Plan. Table III-5 summarizes the data to provide a gauge for the relative importance of the local exposures near plating shops. The greatest general exposure is in the South Coast Air Basin, 4.0 mg/m^3-persons (4 million ng/m^3-persons).

In general, local exposures around specific sources are not reflected in the monitoring data because the monitors are not near significant sources. Air quality modelling is used to estimate the local concentrations of Cr(VI) attributable to an individual plating shop. These concentrations are increments to the general ambient concentration estimated from the monitoring data.

Table III-5

ARB Monitoring Data for Cr(VI)
(May 1986 - April 1987)

Air Basin	No of sites/data	Mean concentration,[a] ng/m^3	Exposure,[b] mg/m^3-persons
Bay Area	5/80	0.3	.9
San Diego	2/30	0.2	.4
San Joaquin Valley	3/72	0.2	.3
So. Cen. Coast	2/44	0.2	.2
South Coast	5/122	0.5	4.0
Total			5.8

a population-weighted mean of site averages, nanograms per standard cubic meter
b mean concentration x basin population

The ARB staff has modeled the effect of a hypothetical plating operation located in Los Angeles under the meteorology recorded in 1976 at Los Angeles International Airport.* (See Appendix IV) Using the ISCST model, the

* 1976 is one of three years for which the requisite meteorological data are available. The 1976 data produce the highest modeled concentrations. Their use may bias the modeling results high relative to actual long-term averages.

following results in Table III-6 were obtained for the average effects over one year of constant emissions of one mg/sec. These results were applied to the emissions from each identified shop in the South Coast Air Basin and to the estimated total emissions in that basin.

Several actual plating sites were modelled in each of the other air basins. The calculated exposure from each model in a basin was divided by the result that would be obtained from Table III-6 for the same emission rate. Then, the average such ratio ("correction factor" in Appendix IV) in each basin was applied to the results from using Table III-6 for each shop and total emissions in that basin. This procedure was followed for all platers except Rohr Industries in Chula Vista, where actual modelling results were used.

Table III-7a and III-7b show the resulting estimated effects on air quality near the example controlled and uncontrolled plating shops in Table III-3. Comparing Tables III-5, 7a and 7b shows that the exposure near hard/anodizing shops, especially those with controls, dominates exposure near decorating shops, both shop-by-shop and cumulatively. Also, the near-source concentrations and the total near-source exposure, 22.6 mg/m^3-persons, exceed the values from air monitoring. For this reason, the analysis in this report is devoted only to near-source exposure and risks. Therefore, actual reductions of risk and cancer incidence due to controlling emissions may be greater than the ensuing analysis indicates.

Table III-6

Exposure Model for Unit Emissions at
a Hypothetical Chrome Plater in Los Angeles

Input	
Source location, UTM:	3370 N, 338 E
Stack height:	9.1 m
Stack velocity:	17.4 m/s
Stack temperature	ambient
Emission rate:	1 mg/sec[a]
Meteorology:	LAX, 1976
Operations:	continuous
Output (annual averages)	
Maximum ground level concentration of Cr(VI)	6.26 ng/m^3
Upper fifth percentile concentration[b]:	0.19 ng/m^3
Population-weighted average concentration:	.0626 ng/m^3
Exposure:	1.41×10^5 ng/m^3-person

a The actual input was 17.64 mg/sec. Results have been adjusted by 1/17.64 because the model is linear.

b Five percent of the population in the modeling area would experience concentrations greater than 0.19 ng/m^3, annual average.

The Department of Health Services has estimated the individual's risk of cancer during a lifetime of exposure to ambient Cr(VI) as between 12 and 146 per million per ng/m^3 (equivalent to 12 to 146 cases of cancer per million people exposed for 70 years to 1 ng/m^3).[19] Multiplying the data in Tables III-7 by this risk factor yields the risks and calculated cancer incidence that would apply to a population constantly exposed to the outdoor ambient air. Per a discussion in Appendix VII, we further multiply by 0.80 to account

Table III-7a

Effects on Air Quality Near Uncontrolled Plating Shops

	Decorative			Hard/Anodizing		
	median shop[a]	highest shop	all shops[b]	median shop	highest shop	all shops[b]
Model Population, 10^6	2.3	2.3	--	2.3	2.2	--
Ambient Cr(VI) Concentration, ng/m^3						
maximum	.0083	2.8	--	.75	66	--
average[c]	8×10^{-5}	.028	--	.0075	.68	--
Exposure to Cr(VI), mg/m^3-persons	.00019	0.064	.23	.017	1.5	4.3

a "Median" and "highest" refer to emissions.
b statewide total
c among model population

Table III-7b

Effects on Air Quality Near (Currently) Controlled Plating Shops

	Decorative			Hard/Anodizing		
	median shop[a]	highest shop	all shops[b]	median shop	highest shop	all shops[b]
Model Population, 10^6	2.3	2.3	--	2.3	2.3	--
Ambient Cr(VI) Concentration, ng/m^3						
maximum	.009	.065	--	1.1	110	--
average[c]	9×10^{-5}	.00065	--	.011	1.1	--
Exposure to Cr(VI), mg/m^3-persons	.00020	.0015	.022	.024	2.5	18.2

a "Median" and "highest" refer to emissions.
b statewide total
c among model population

for the somewhat lower concentrations of chromium expected indoors (but due to plating emissions). The resulting risks and incidence of cancer are in Tables III-8a and 8b. As a direct result of the emission rates in Table III-3, the risks near hard plating shops, up to 13,000 per million, are generally much greater than risks near decorative platers. Their cumulative effect dominates cancer incidence, which totals 220 to 2,700 cases in 70 years.

The expected lifetime cases of cancer near the median controlled hard

Table III-8a

Risks and Cancer Incidence Near Example Uncontrolled Plating Shops

	Decorative			Hard/Anodizing		
	median shop[d]	highest shop[d]	all shops	median shop	highest shop	all shops
Maximum risk per million[a,b]	.08-.97[c]	27-330	--	7.3- 89	820-10,000	--
Cancer cases[b]	.002-.02	.61-7.4	2.4-27	.16-2.0	15-180	41-500

a individual's risk or expected cases per million people
b during 70 years
c xx-xx denotes low-high range of risk factor
d "Median" and "highest" refer to emissions.

Table III-8b

Risks and Cancer Incidence Near Example Controlled Hard Plating/Anodizing Shops

	Decorative			Hard/Anodizing		
	median shop[d]	highest shop[d]	all shops	median shop	highest shop	all shops
Maximum risk per million[a,b]	.09-1.1[c]	2.1-26	--	10-120	1,000-13,000	--
Cancer cases[b]	.002-.02	.047-.58	.21-2.6	.23-2.8	24-290	180-2,200

a individual's risk or expected cases per million people
b during 70 years
c xx-xx denotes low-high range of risk factor
d "Median" and "highest" refer to emissions.

plating shop (Table III-8b) are 0.23 to 2.8. (The range reflects the range of the risk factor.) The expected cases near the most emissive controlled shop are 24 to 290. Because uncontrolled shops are usually smaller, they (Table III-8a) have fewer expected cases.

Finally, applying the exposure factor from Table III-6 (1.41×10^5 ng/m^3-persons per mg/sec of emissions), the correction factors for exposure in air basins, the exposure correction (0.80), and the risk factors to the emission inventory in Table III-4 yields the break-down in Table III-9 of expected cancer cases by air basin and by type of plating. This calculation results in 220 to 2,700 cases of cancer over 70 years due to existing facilities in the state. About 96 percent of the cases are due to hard plating. The cumulative effects near plating shops exceed the cancer incidence attributable to the general ambient Cr(VI) concentration reflected by Table III-5. The latter incidence is about 60 to 700 cases in 70 years, statewide.

The staff has also modelled the effects at two small plating shops in the South Coast using actual local meteorology, actual stack parameters, and measured emission rates. Table III-10 shows the results. Predicted cases are within a factor of 2 of the results estimated from the factors in Table III-6. This result supports the staff's approach to estimating the effect of plating emissions in the South Coast.

Table III-9

Cancer Incidence from Plating Operations
(cases in 70 years)

Air Basin	Plating Type			Total[a]
	hard	decorative	anodizing	
Bay Area	20-240	.08-.93	.07-.83	20-240
Sacramento	18-220	0	0	18-220
San Diego	18-220	.11-1.3	6.6- 80	25-300
San Joaquin	2.2-27	.01-.13	0	2.2-27
So. Central Coast	.04-.44	0	0-.07	.04-.51
South Coast	170-1,900	2.3-28	1.5-19	170-2,000
Total[a]	210-2,600	2.5-30	8.2-100	220-2,700

a Columns and rows do not sum exactly because of rounding.

Table III-10

Modeling Results for Specific Shops

Company	Location	Type	Emissions, lbs/yr	Risk per 10^6	Cancer cases[a] model	Cancer cases[a] per Table III-6
Pamarco	Orange	hard	0.25	2 to 30	.038	.074
Price-Pfister	Pacoima	dec	0.41	3 to 39	.13	.12

a over 70 years, high risk factor

IV. CONTROLS FOR PLATING EMISSIONS

A. DEMONSTRATED CONTROLS, HARD PLATING

Almost all hard platers who treat the ventilation exhausts from plating tanks use mist eliminators (de-misters) or various low-energy scrubbers equipped with de-misters. Both types of devices are "impaction" collectors; they place barriers in the paths of aerosol (mist) particles in the flowing gas to intercept them and remove them from the gas stream.

De-misters are of various types. The most common, the chevron, is simply a group of parallel zig-zag channels through which the flue gas is directed. (See Figure IV-1.) Mist particles too large to make the sudden changes of direction in the channels touch the wet wall and stick. The collected moisture drains away to a sump. Another type of de-mister found at plating tanks is a woven fiber pad. The tortuous path of the gas through the pad causes mist particles to hit and collect on the fibers.

De-misters will remove 99 and greater percent of mist from gas streams in certain applications.[20] However, the collection efficiency for particles with diameters less than 2 microns is relatively poor. The few measurements of particle size distribution of emissions from chrome plating tanks show 2 to 10 percent of the mass of emitted chromium in mist particles at or below 2 microns. This fine particle content of the mist should limit the potential efficiency of de-misters. The staff is aware of one brand of woven de-mister pad that is claimed to be 99+ percent efficient on particles greater than 1.5 microns in diameter. However, there are no data on its performance on uncontrolled acid mist from plating tanks.

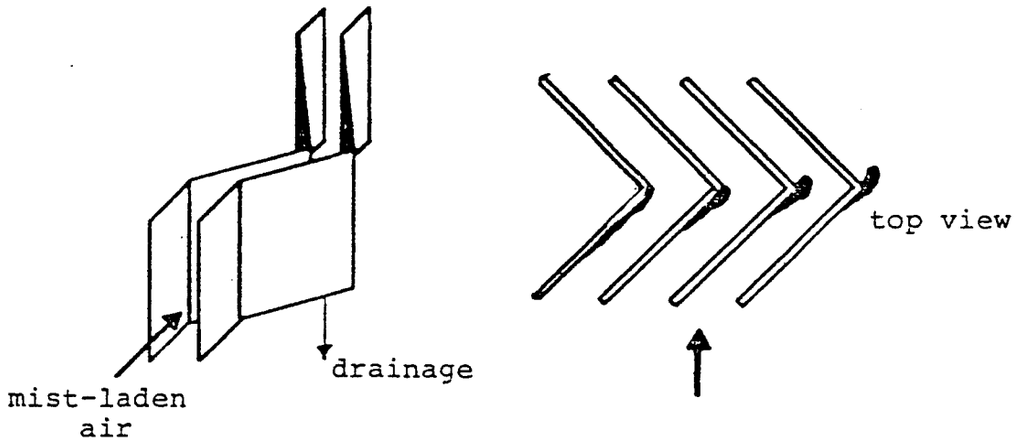

Figure IV-1

Illustration of Chevron De-mister

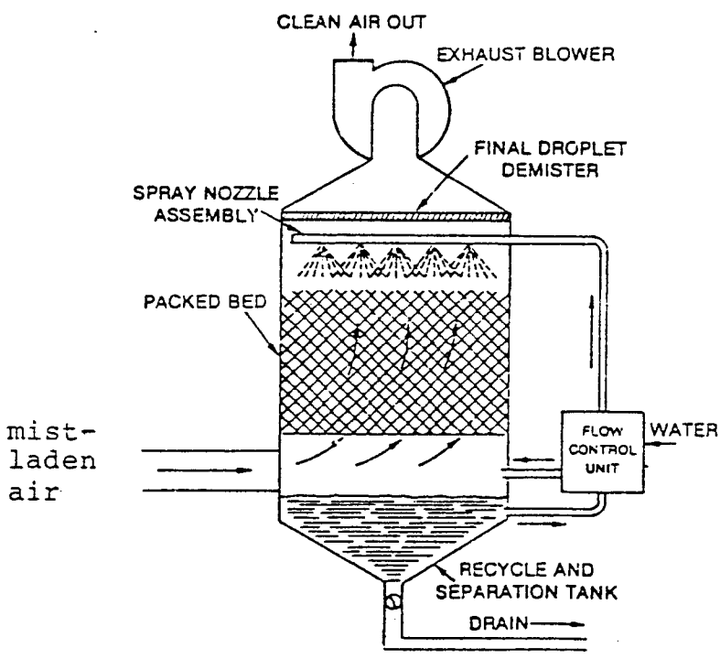

Figure IV-2

Typical Packed-Bed Scrubber

(figures adapted from ref. 20)

Table IV-1 shows the measured efficiencies of de-misters applied to uncontrolled plating emissions. The data, which are based on measurements of total chromium, range from 88 to 98 percent control. The 88 percent value may reflect less than the potential efficiency of the associated de-mister because the pressure drop across that de-mister was only 0.1 inches of water, whereas the other two demisters in the table were run with pressure drops greater than 2 inches. Higher pressure drops reflect higher gas velocities and thus better collection of small particles.

Table IV-1

Measured Efficiencies of De-misters on
Hard Plating Tank Emissions of Total Chromium

Plant	Location	References	Inlet conc. 10^{-4} gr/sdcf	Emissions,[a] mg/a-hr	Removal Efficiency
U. S. Navy	Virginia	6	2.6	.14	95%
Able Machining	So. Carol.	1	33	.15	98%
Greensboro Plating	No. Carol.	3	10	.61	88%

[a] controlled

Most scrubbers on chrome plating tanks are packed bed scrubbers. The packing acts much as does a mesh pad de-mister, capturing the mist particles as the gas stream flows in the tortuous path through the bed. However, a scrubber, unlike a de-mister, is continuously flushed by recirculating water flowing either counter- or cross-current to the gas stream. Some of the water

may be introduced to the gas steam before the packing as a fine spray. The spray particles impinge on and collect the larger mist particles. A de-mister is added at the scrubber outlet to capture any water droplets entrained in the exiting gas. Figure IV-2 shows a packed bed scrubber.

Table IV-2

Measured Efficiencies of Low-Energy Wet Scrubbers on Hard Plating and Anodizing Emissions of Total Chromium

Plant	Location	References	Inlet conc. 10^{-4} gr/sdcf	Emissions[a] mg/a-hr	Removal Efficiency
U. S. Navy	Long Beach	5	.80	.15	89%
Steel Heddle	So. Carol.	2	6.7	.50	96%
Tarby, Inc.	Hunt. Bch.	7	22	.23	98%
Carolina Plating	So. Carol.	4	6.7	.17	93%
Pamarco	Orange	13	0.36	.02	97%
Plato Products	Glendora	10	.07	.04	43%
Chrome Crankshaft	Bell Grdns.	11	17	b	98%
Standard Ni,Cr	Los Angeles	8	0.23	.04	51%
Embee Plating	Santa Ana	14	0.75 0.17	b b	83% 76%
Piedmont Indus.	No. Carol.	24	26	.14	99.4%
Confidential until further notice			.33	.16	94%

a controlled
b no datum

Wet scrubbers are expected to be somewhat superior to de-misters in removing the small mist particles. However, the data taken from source tests at chrome plating and anodizing tanks, shown in Table IV-2, do not indicate such superiority in general.

The removal efficiencies in Table IV-2 range from 99.4 percent down to 43 percent. A common characteristic of the scrubbers with poor efficiencies is a low inlet concentration of chromium, less than 10^{-4} grains/cubic foot. The staff assumes that the low inlet concentrations indicate the absence of large mist particles in the air entering the scrubbers. In the case of the extremely low concentration at Plato Products, this is apparently the result of a layer of plastic beads on the tank surface. In the case of Standard Nickel Chromium, the low concentration may be the result of an extremely deep tank, 39 feet. Despite poor control efficiencies, these plants have low emissions. At other shops, the configuration of exhaust ducts may capture large mist particles before the scrubbers, causing low efficiencies in the scrubbers but good overall control.

It should be noted that none of the plants in Tables IV-1 and IV-2 were subject to regulations nor, in general, to permit conditions that limited emissions of chromium.

B. DEMONSTRATED CONTROLS, DECORATIVE PLATING

Some decorative plating tanks are equipped with the same kinds of control hardware as are the hard plating tanks. Table IV-3 shows the few source test data on hand. Both shops used anti-mist additives and scrubbers. The data indicate extreme variability in the effect of scrubbers on decorative plating

emissions, and they reinforce the theory that very low inlet concentrations indicate the absence of large mist particles, leading to poor scrubber performance. In the case of decorative plating, the low inlet concentration apparently is caused by the anti-mist additives added for that purpose to the tanks.

Table IV-3

Measured Efficiencies of Low-Energy Wet Scrubbers on Decorative Plating Tank Emissions

Plant	Location	Reference	Inlet conc., 10^{-4} gr/sdcf	Removal Efficiency, %
C. S. Ohm	Missouri	15	.007	0
Price-Pfister	Pacoima	17	.44	79
		16	.074	21

C. OTHER POSSIBLE CONTROLS

1. Covered Baths: Anti-Mist Additives

The low concentrations of chromium in the scrubber inlets at Plato Products (hard chrome plater) and at the decorative platers indicate great reductions in the formation of acid mist. At Plato, the reduction is caused by the layer of beads on the surface of the bath; at the decorative platers, it is caused by the anti-mist additives. If we assume that without the beads, the chromium concentration at Plato would be at least as high as that of the next least emissive tank in Table III-1, the control efficiency of the beads

is at least 60 percent. Compared to the median emission concentration in Tables IV-1 and 2, the emissions from the surface at Plato would be at least 97 percent reduced from the no-beads condition.

Two of the three inlet concentration data in Table IV-3 indicate similar effects of the anti-mist additives in decorative plating tanks. These operate by reducing the plating bath surface tension or by creating a thick layer of foam on the bath's surface. Reducing the surface tension of the plating bath reduces the amount of mist formed; a foam blanket traps the mist as it is formed. Thus, it appears that covering the surface of plating baths or adding mist suppressants can reduce emissions by about the same degree as do scrubbers and de-misters.

Anti-mist additives are regularly used by decorative platers and used by a few hard platers. However, when thick layers of chrome are deposited, the additives can cause a pitted surface. Some platers claim that beads on the bath can interfere with the plating. Therefore, beads or additives can be an effective means of control for some hard platers and anodizers but may not be generally acceptable.

2. High Energy Scrubbers

The packed bed scrubbers commonly used by platers, known as low-energy scrubbers, are relatively cheap to install and operate compared to potentially more effective devices. The low pressure drops across the devices reflect low expenditures of energy for moving gas streams through the bed, forming water sprays, and re-circulating water.

There are more effective scrubbing devices that expend considerably more energy in accelerating the gas stream to provide greater inertial collection of small particles and in atomizing and accelerating water droplets to better intercept mist particles. The most common high-energy scrubber is the venturi scrubber, which is usually operated at a pressure drop around 30 inches of water rather than the 4 or fewer inches typical of packed bed scrubbers and de-misters. The costs of venturi scrubbers annualized over 10 years are about four times higher than those of the scrubbers now used by platers. Figure IV-3 depicts the impaction zone of a venturi scrubber.

We do not know of any high-energy scrubbers on plating tanks, so the potential control efficiency is not documented. However, in other applications, venturi scrubbers are demonstrated to be superior to packed beds. For example, even at moderate pressure drops, venturi scrubbers can remove 99 percent of particles at 1 micron diameter, as opposed to only 70 percent achieved in theory by the most efficient low energy device known to the staff.

3. Wet Electrostatic Precipitators (ESP)

Wet ESP's collect mist particles by imparting to them an electric charge from a corona discharge and collecting the charged mist on electrostatic plates or wires. The collecting surfaces are continuously flushed with water to remove the collected mist. ESP's maintain high efficiencies down to 0.1 micron. Wet ESP's have achieved control by 99 to 99.8 percent at several types of sources having sub-micron particle emissions, including acid mist from sulfuric acid plants. The staff has found only one poorly documented

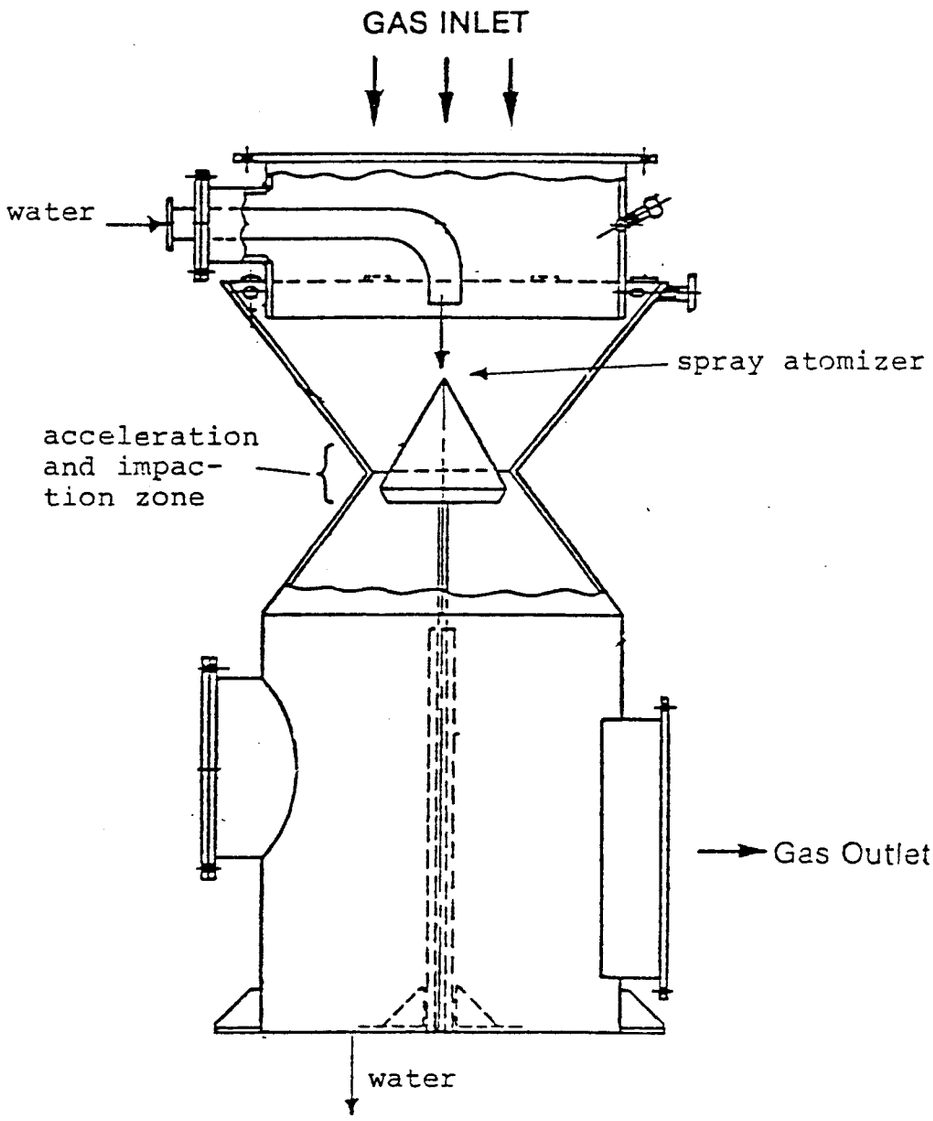

Figure IV-3
Illustration of Venturi Scrubber

(adapted from ref. 20)

reference[22] to an ESP used to control plating emissions. It reported 99.7 percent control of chromium. No further information on this installation is available.

The capital cost of a wet ESP would be much greater than that of a scrubber. As a result, the total costs annualized over 10 years could be up to 10 times those of scrubbers.

4. Sulfuric Acid Plant De-Misters

Emissions of acid mist from sulfuric acid plants are controlled by glass-fiber-pad de-misters much larger per unit of gas flow rate than those employed at plating tanks. (See Figure IV-4.) These are low velocity devices that rely on Brownian motion to collect sub-micron particles. The EPA reports that the manufacturers of such de-misters sometimes guarantee collection efficiency as great as 99.8 percent for mist particles less than three microns in diameter. The three size distributions of chrome plating mists known to the staff have mass mean diameters greater than three microns, so we assume that these sulfuric acid mist eliminators have the potential to control plating emissions by at least 99.8 percent. As a rough estimate, these de-misters would cost about four times as much as a good grade wet scrubber.[23] Operating costs also would be higher.

Although not yet demonstrated at plating tanks, the high-efficiency mist eliminators should be compatible for plating emissions. This view is supported by a recent decision by Plato Products, a hard chrome shop in Glendora, to install such a device.[25]

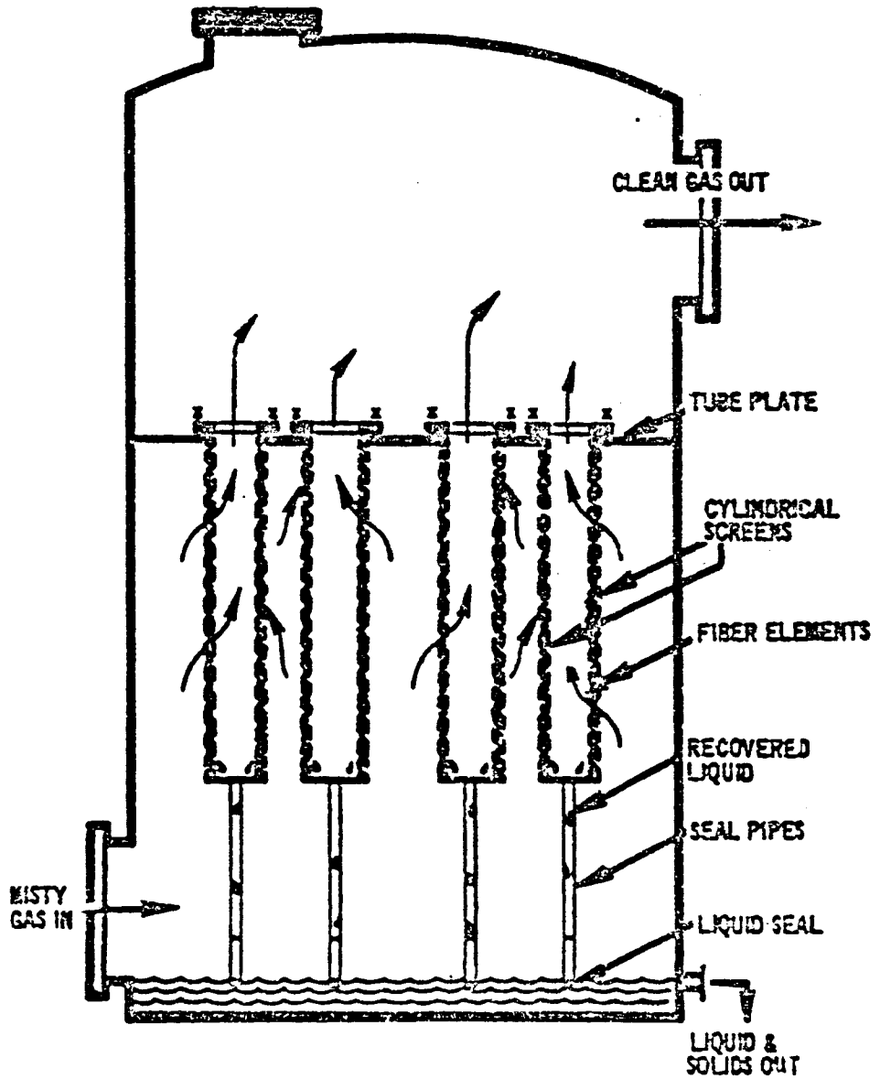

Figure IV-4

Sulfuric Acid Plant De-mister

5. Substitute Compounds

Some decorative platers use trivalent chromium rather than Cr(VI) as the plating agent in their baths. This practice, which is common in other states, eliminates emissions of Cr(VI). However, a finish produced in a trivalent chromium bath may have a different appearance than a Cr(VI) chrome finish. Therefore, a job shop attempting to use Cr(III) might be unable to satisfy its customer's need for an invariant chrome finish on all its parts. However, a switch to trivalent chromium may be a feasible alternative for in-house decorative plating operations. Trivalent chromium cannot be used in hard chrome plating.

D. ACHIEVABLE CONTROL EFFICIENCY

From the data in Tables IV-1 and IV-2, the staff concludes that the best available control technology (BACT) for hard plating and anodizing is the packed bed scrubber with an outlet de-mister. As currently applied to plating emissions, this technology can routinely provide 95 percent emission control (or its equivalent as discussed later). We also conclude that 99 percent control represents the lowest achievable emissions with this BACT technology.

Above 95 percent control, the fraction of the aerosol with diameters less than 2 microns becomes a critical variable for determining overall efficiency. There are insufficient data on the size of plating mist particles to assure the achievement of control greater than 95 percent at all plating tanks with standard low-energy scrubbers. However, we believe that wet scrubbing can be designed to provide--at the limit of the technology--control as great as 99

percent at most hard or anodizing plating shops. That value has been demonstrated at one shop and closely approached (e.g., 97 percent and 98 percent) at others. Performances better than that commonly demonstrated to date could be obtained through re-design or more closely monitored operation of scrubbers. For example, extra packing depth and fine mesh pad de-misters can be added. Also the velocity of the air into the scrubber can be increased. This would increase the momentum of each mist particle, thus making it more likely that the small particles will strike a packing element (surface) where the air stream makes a sudden turn around that element. For example, Table IV-4 shows theoretical efficiencies of collecting one- and two-micron particles versus velocity through one brand of mesh pad that is used in some wet scrubbers on chrome plating tanks.

Table IV-4

Theoretical Removal Efficiencies*

Particle size, micron	Velocity, feet/sec		
	1	5	10
1	0	26%	92%
2	55%	87%	99.9%

* Kimre, Inc., mesh style 4/96, 10 layers

(There is an economic penalty for increasing the air velocity through a scrubber or increasing the packed depth. The pressure drop through the

scrubber increases as the square of the velocity and as the first power of depth. The cost of power for the scrubber fan is proportional to the pressure drop. Also, increasing the velocity may require increasing the volumetric flow rate of the air, requiring a more costly fan.)

Control better than 99 percent of hexavalent chromium emissions also is feasible for plating emissions. However, a plater would have to turn to technologies not yet applied to plating tanks. The adaption of wet ESP's or the de-misters used at sulfuric acid plants offers the potential of control to 99.8 percent. By adding mist-suppressants or beads to the plating tanks, further augmentation of control might be achieved. Also, there may be reductions of pre-control emissions to be obtained by modifying the plating equipment. This potential is apparently unexplored, as is the basic physics of the formation of the mist. It may be possible to discourage the creation of mist by means other than the use of additives or beads.

Regardless of the degree of control required of platers (e.g., 95, 99, or 99.8 percent), there will be a few platers unable to comply without extraordinary difficulty. Their problem would be an extremely low mist concentration or extremely low particle size entering the control device. Examples are Plato Products and Standard Nickel Chrome (Table III-1), which have low emissions but which achieve only 40 to 50 percent control. To remove this problem while still requiring low emissions, the proposed control measure combines each requirement for percent control with an alternative limit on milligrams of hexavalent chromium emitted per amp-hour. By studying the source test results, the staff concludes that reasonable values of such a

limit would be .15, .03, and .006 mg/amp-hour to correspond to 95, 99, and 99.8 percent control, respectively. 0.15 mg/amp-hour should be achievable by all platers; 0.03 mg/amp-hour is slightly greater than the lowest demonstrated value; and .006 mg/amp-hour would require innovative control techniques.

For decorative plating, the data do not show that demonstrated control hardware achieves significant reductions in Cr(VI) emissions. The use of foams or beads does greatly reduce emissions.