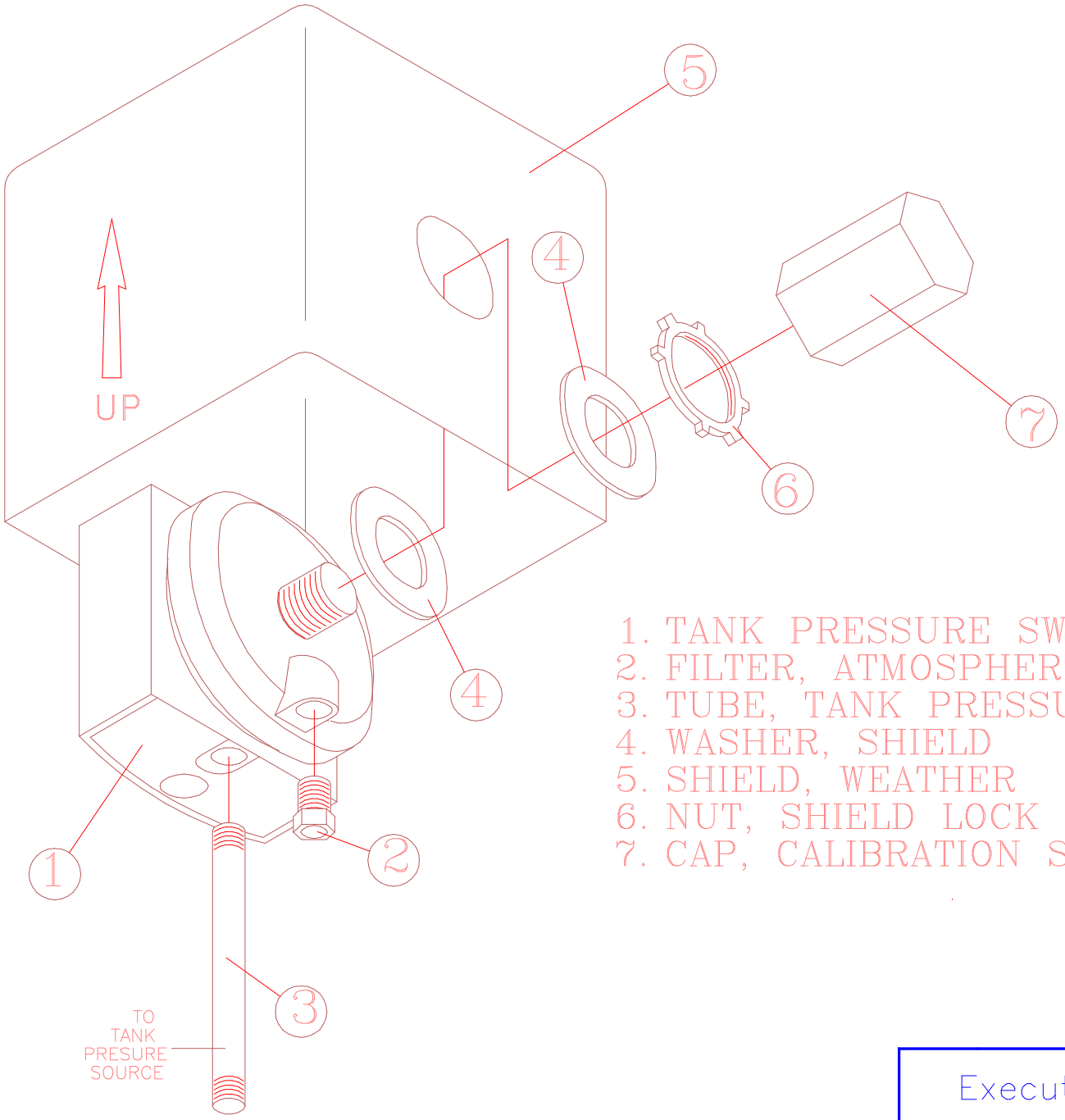

ORIENTATE AS SHOWN

1. TANK PRESSURE SWITCH
2. FILTER, ATMOSPHERIC
3. TUBE, TANK PRESSURE
4. WASHER, SHIELD
5. SHIELD, WEATHER
6. NUT, SHIELD LOCK
7. CAP, CALIBRATION SCREW

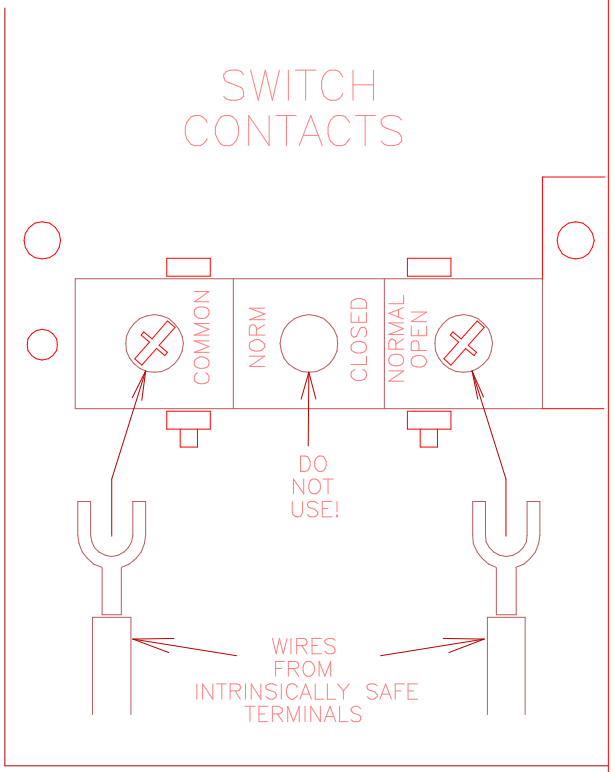

SWITCH
ELECTRICAL
CONNECTIONS

Executive Order G-70-164-AA
Figure 9
Tank Pressure Switch