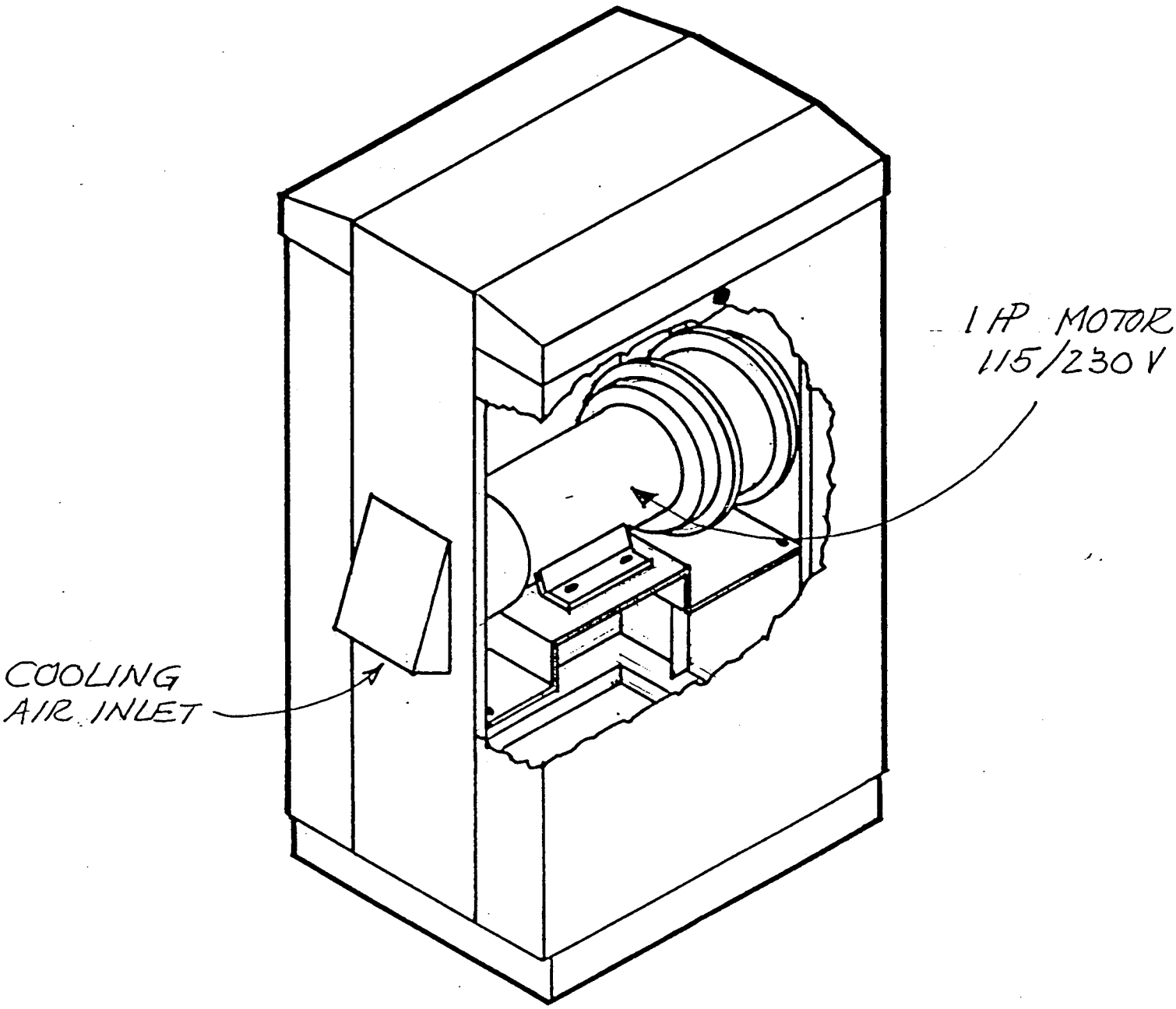Executive Order G-70-165
Figure 2B-1
2000C Vacuum Blower