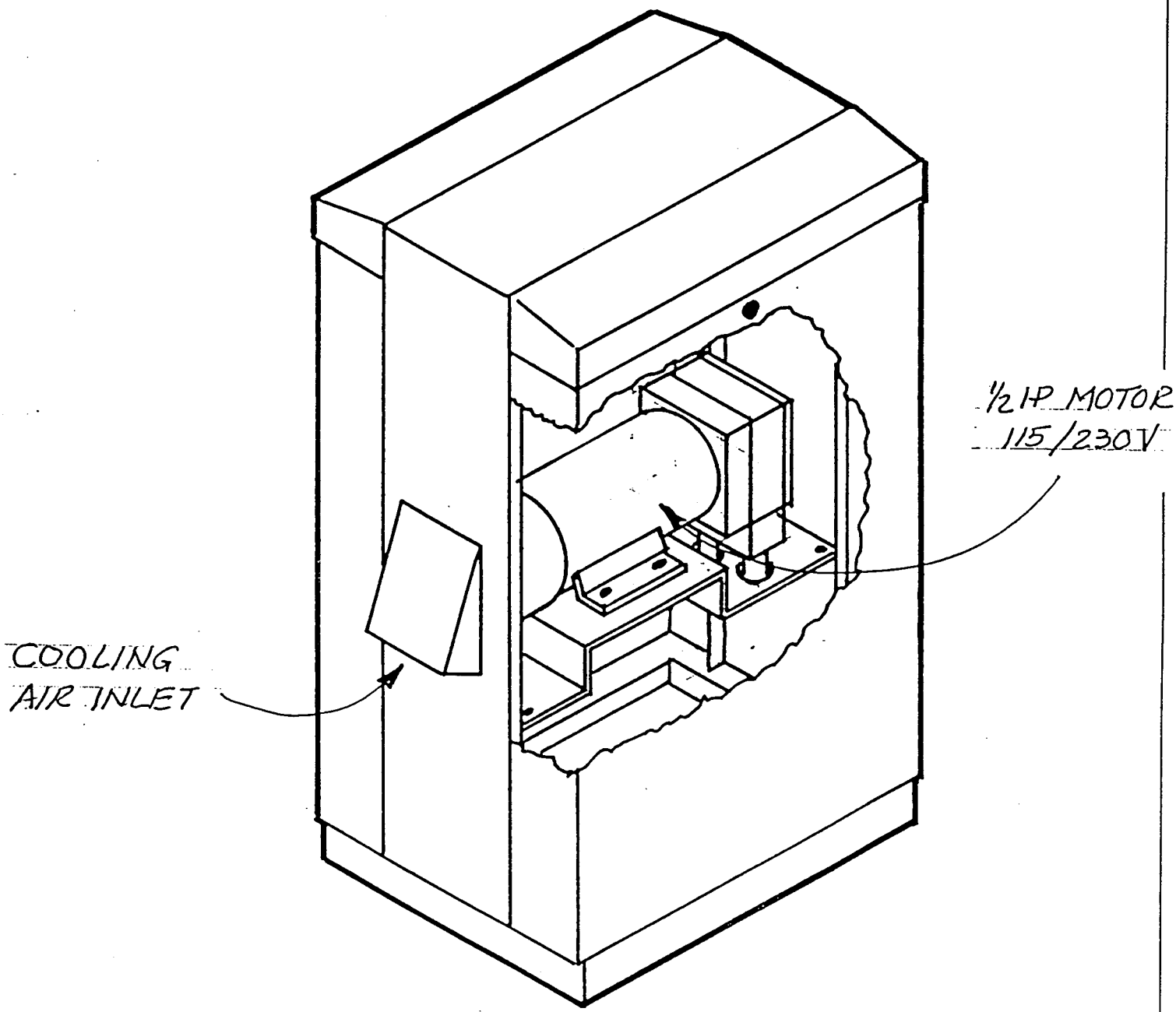Executive Order G-70-165
Figure 2B-2
VP-500C Vane Pump