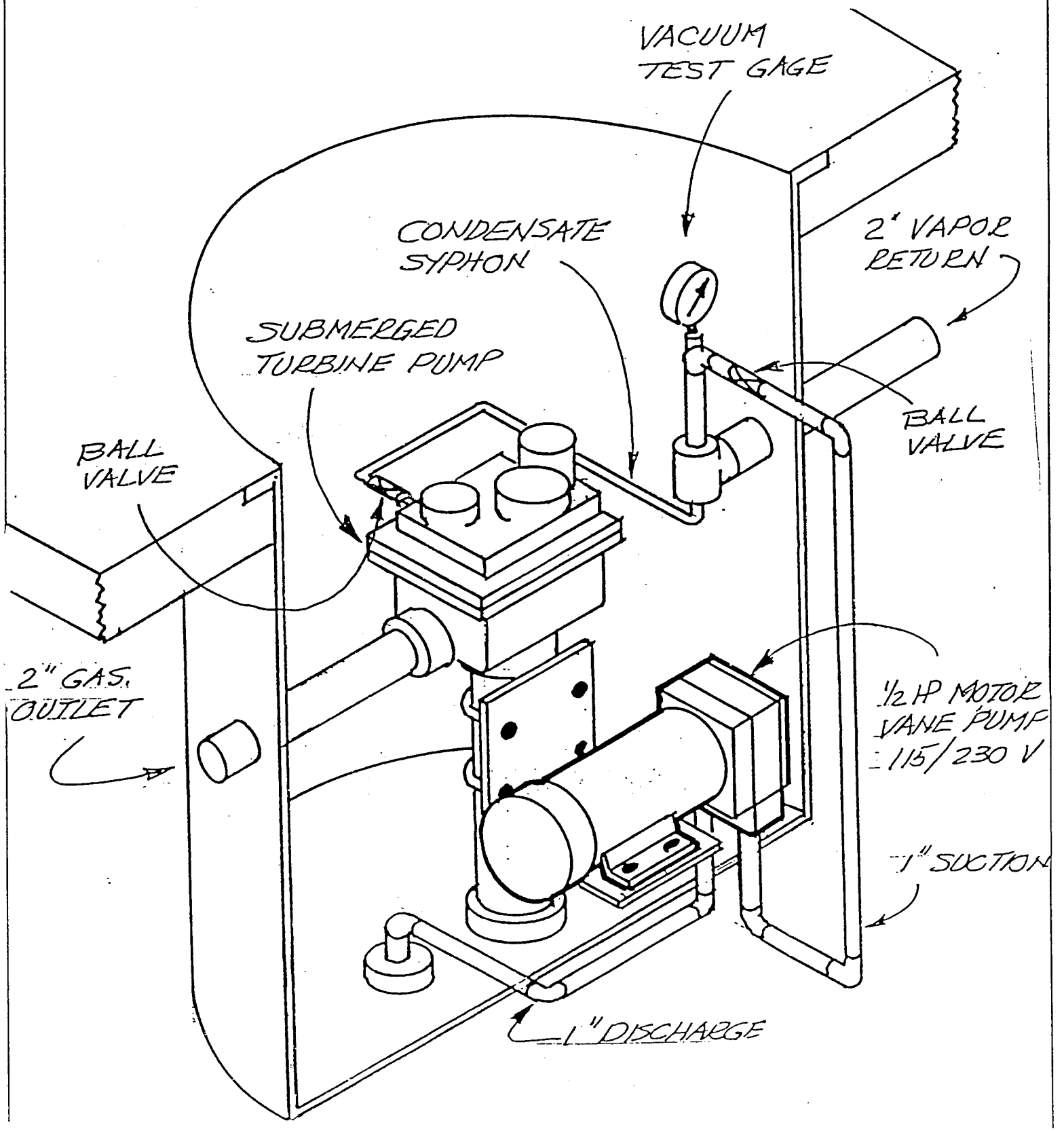Executive Order G-70-165
Figure 4A-1
VP-500 Vane Pump