Executive Order G-70-183

Exhibit 2

Figure 2B-2
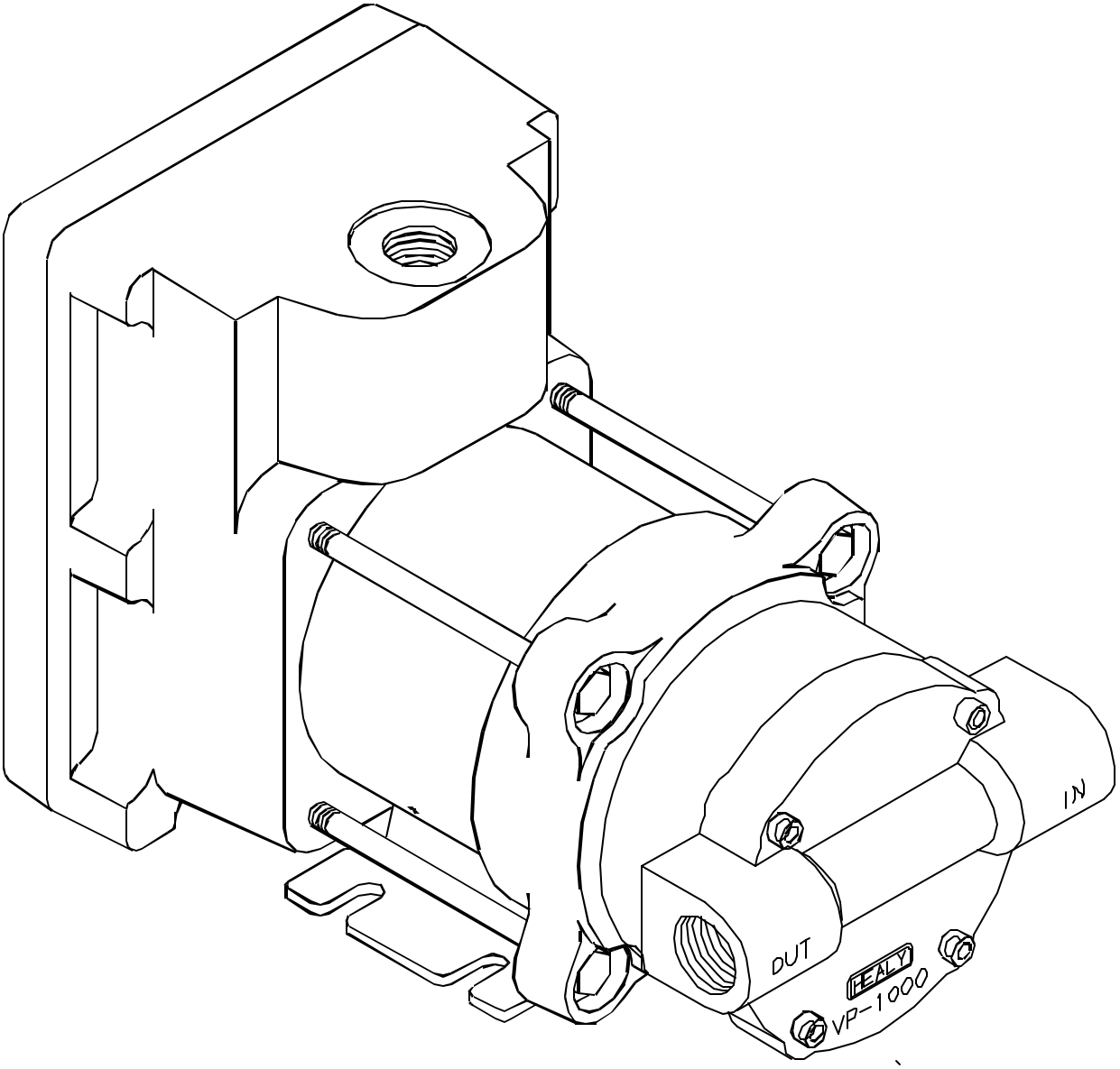
Franklin Electric VP1000 Vapor Pump