Executive Order G-70-175
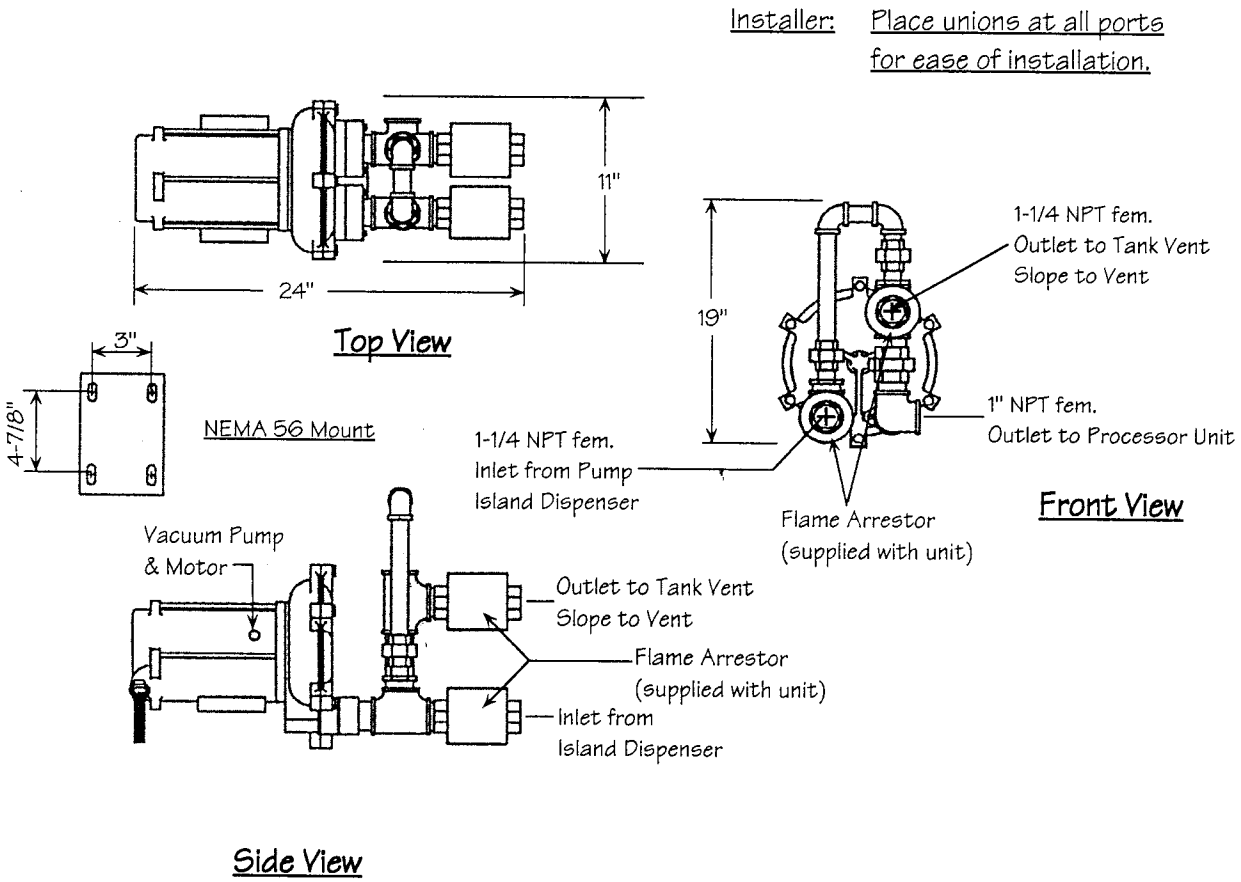
Figure 2B-2
Collection Unit Detail