Exhibit 1
Executive Order G-70-190

Guardian Containment Corporation "Armor Cast"
Aboveground Tank Fueling/Dispensing Vapor Recovery System

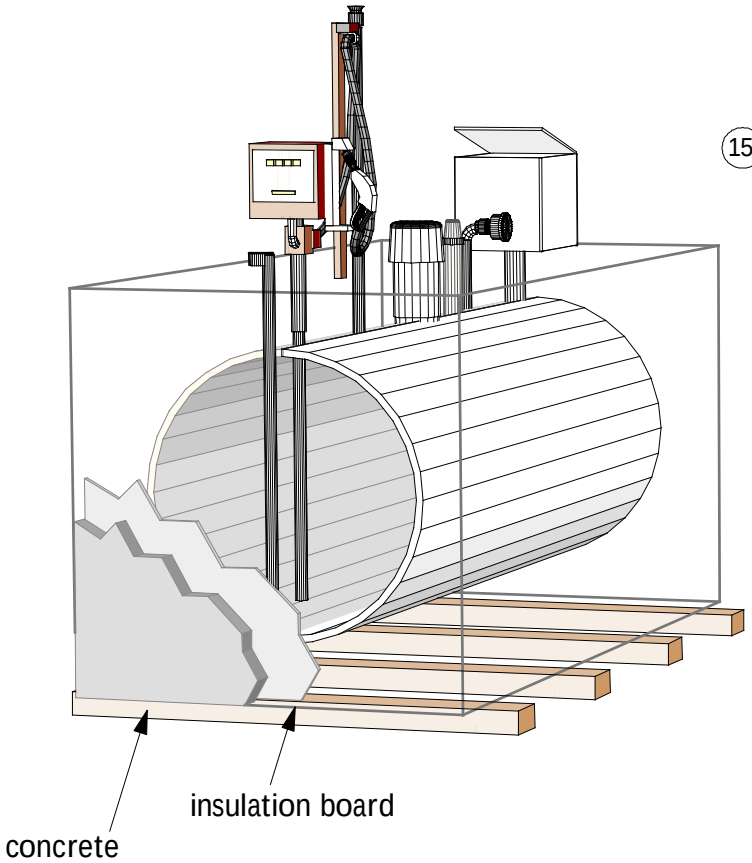

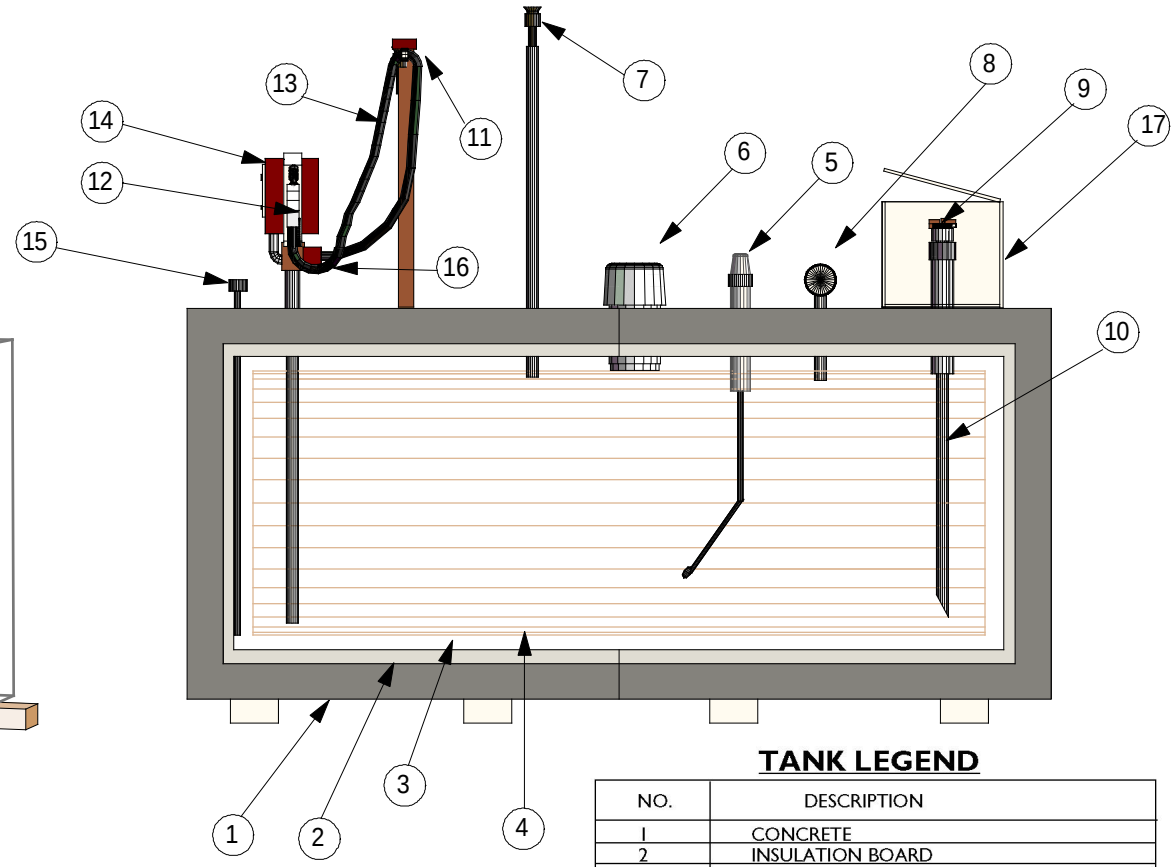

TANK LEGEND

NO.	DESCRIPTION
1	CONCRETE
2	INSULATION BOARD
3	AIR SPACE
4	HOLDING TANK
5	GAUGE ACCESS
6	EMERGENCY VENT
7	PRESSURE VACUUM (P/V) VENT
8	VAPOR ADAPTOR AND CAP
9	FILL ADAPTOR AND CAP
10	SUBMERGED FILL TUBE
11	HOSE RETRACTOR
12	NOZZLE
13	COAXIAL HOSE
14	PUMP
15	INTERSTITIAL AIR SPACE MONITORING TUBE
16	COAXIAL HOSE ADAPTOR
17	SPILL CONTAINMENT BOX

Notes:

The holding tank shall be enclosed within a minimum of six (6) inches of concrete, one (1) inch of insulation board and two (2) inches of interstitial air space.

The tank vent shall extend to a minimum height of 12 feet above grade.