Superceded by 148A

State of California
AIR RESOURCES BOARD

Executive Order G-70-148

Certification of Hoover Group, Inc., Lube Cube
Aboveground Gasoline Vault Tank Filling/Dispensing
Vapor Recovery System

WHEREAS, the Air Resources Board (the "Board") has established, pursuant to Sections 39600, 39601, and 41954 of the Health and Safety Code, certification procedures for systems designed for the control of gasoline vapor emissions displaced during the filling of storage tanks at service stations ("Phase I vapor recovery systems") and for the control of gasoline vapor emissions from motor vehicle fueling operations ("Phase II vapor recovery systems") in its "Certification Procedures for Gasoline Vapor Recovery Systems at Service Stations" as last amended December 4, 1981 (the "Certification Procedures"), incorporated by reference in Section 94001 of Title 17, California Code of Regulations;

WHEREAS, the Board has established, pursuant to Sections 39600, 39601, and 41954 of the Health and Safety Code, test procedures for determining compliance of Phase I and Phase II vapor recovery systems with emission standards in its "Test Procedures for Determining the Efficiency of Gasoline Vapor Recovery Systems at Service Stations" as last amended September 1, 1982 (the "Test Procedures"), incorporated by reference in Section 94000 of Title 17, California Code of Regulations;

WHEREAS, Hoover Group, Inc., has applied for Phase I and Phase II vapor recovery certification of its Lube Cube's vapor recovery system for use with gasoline and on single or split (two compartment) product tanks up to 6,000 gallons total capacity, rectangular in shape, and with top loading Phase I and top dispensing Phase II vapor recovery equipment;

WHEREAS, the Lube Cube vapor recovery system has been evaluated pursuant to the Certification Procedures and Test Procedures;

WHEREAS, Section VIII-A of the Certification Procedures provides that the Executive Officer shall issue an order of certification if he or she determines that a vapor recovery system conforms to all of the requirements set forth in Sections I through VII; and

WHEREAS, I find that the Hoover Group, Inc., Lube Cube aboveground gasoline vault tank vapor recovery system, when used with ARB Certified Phase I and Phase II balance vapor recovery components, conforms with all the requirements set forth in Sections I through VII of the Certification Procedures;

NOW, THEREFORE, IT IS HEREBY ORDERED that this certification applies to the Hoover Group, Inc., Lube Cube aboveground gasoline vault tank vapor recovery system. The system certified hereby is shown in Exhibits 1 and 2, attached. The Lube Cube vapor recovery system certified by this order may be used with gasoline and on tanks with the same geometric configuration and design shown, with top loading Phase I and top dispensing Phase II vapor recovery equipment, and in sizes varying from 250 to 6,000 gallons total capacity as listed in Exhibit 2. The tanks may be constructed in single or dual compartmental configuration.

IT IS FURTHER ORDERED that the use of Air Resources Board certified Phase I and Phase II vapor recovery components shall be a condition to certification. A listing of certified vapor recovery components incorporated by Hoover Group, Inc., in their Lube Cube vault tank system as tested is given in Exhibit 3, attached. In the alterrative, Air Resources Board certified Phase I components from Exhibits 1 through 3 of Executive Order G-70-97-A and Exhibits 1 and 2 of Executive Order G-70-142-A and certified balance system Phase II components from Executive Order G-70-52-AM and other G-70 series may be used.

IT IS FURTHER ORDERED that any emergency vent installed on the tanks be leak free at the operating pressure of the tank when tested in accordance with ARB Method 2-6, "Test Procedures for Gasoline Vapor Leak Detection Using Combustible Gas Detector" adopted September 1, 1982, incorporated by reference in Section 94007 of Title 17, California Code of Regulations.

IT IS FURTHER ORDERED that the threaded stem normally used with the Bobtail truck bulk delivery nozzle be replaced with an OPW 633-B coupler along with OPW 633-BA series coupler/adaptor(s) (or an equivalent arrangement that allows for no leakage of gasoline) to connect the Bobtail truck bulk delivery nozzle with the storage tank fill adaptor (or coaxial fill adaptor) during transfer of gasoline from the delivery truck to the storage tank.

IT IS FURTHER ORDERED that the tanks must be constructed with a minimum of 6 inches of concrete insulating material between the primary tank and the outer liner as shown in Exhibit 2.

IT IS FURTHER ORDERED that the general exterior of the storage tanks be painted white.

IT IS FURTHER ORDERED that prior to using any Lube Cube tank for storage of gasoline its vapor recovery system shall be leak checked at or above the working pressure of the system (PV vent setting) and verified to be vapor tight. Thereafter, the vapor recovery system shall be checked once a year to ensure a vapor tight system and proper operation of the vapor recovery equipment.

IT IS FURTHER ORDERED that compliance with the rules and regulations of the local air pollution control district with jurisdiction where the installed system is located, shall be made a condition of this certification.

IT IS FURTHER ORDERED that the tank and associated piping and other equipment not specifically listed as approved Phase I equipment in Exhibit 3 of this Executive Order, Exhibits 1 through 3 of Executive Order G-70-97-A or Exhibits 1 and 2 of Executive Order G-70-142-A nor specifically listed as approved Phase II equipment in Exhibit 3 of this Executive Order or in Executive Order G-70-52-AM and other G-70 series shall comply with the rules and regulations of the local fire officials with jurisdiction where the installed system is located, and that the use of a PV vent valve shall require the prior approval of such local fire official.

IT IS FURTHER ORDERED that compliance with all applicable certification requirements and rules and regulations of the Division of Measurement Standards, the Office of the State Fire Marshal, and the Division of Occupational Safety and Health of the Department of Industrial Relations shall be made a condition of this certification.

IT IS FURTHER ORDERED that any alteration of the equipment, parts, design, or operation of configurations certified hereby, is prohibited, and deemed inconsistent with this certification, unless such alteration has been approved by the undersigned or the Executive Officer's designee.

Executed this 19 day of January, 1993, at Sacramento, California.

James D. Boyd
Executive Officer

Exhibit 1

Executive Order G-70-148

Hoover Group, Inc., Lube Cube Aboveground Gasoline Vault
Tank Filling/Dispensing Vapor Recovery System

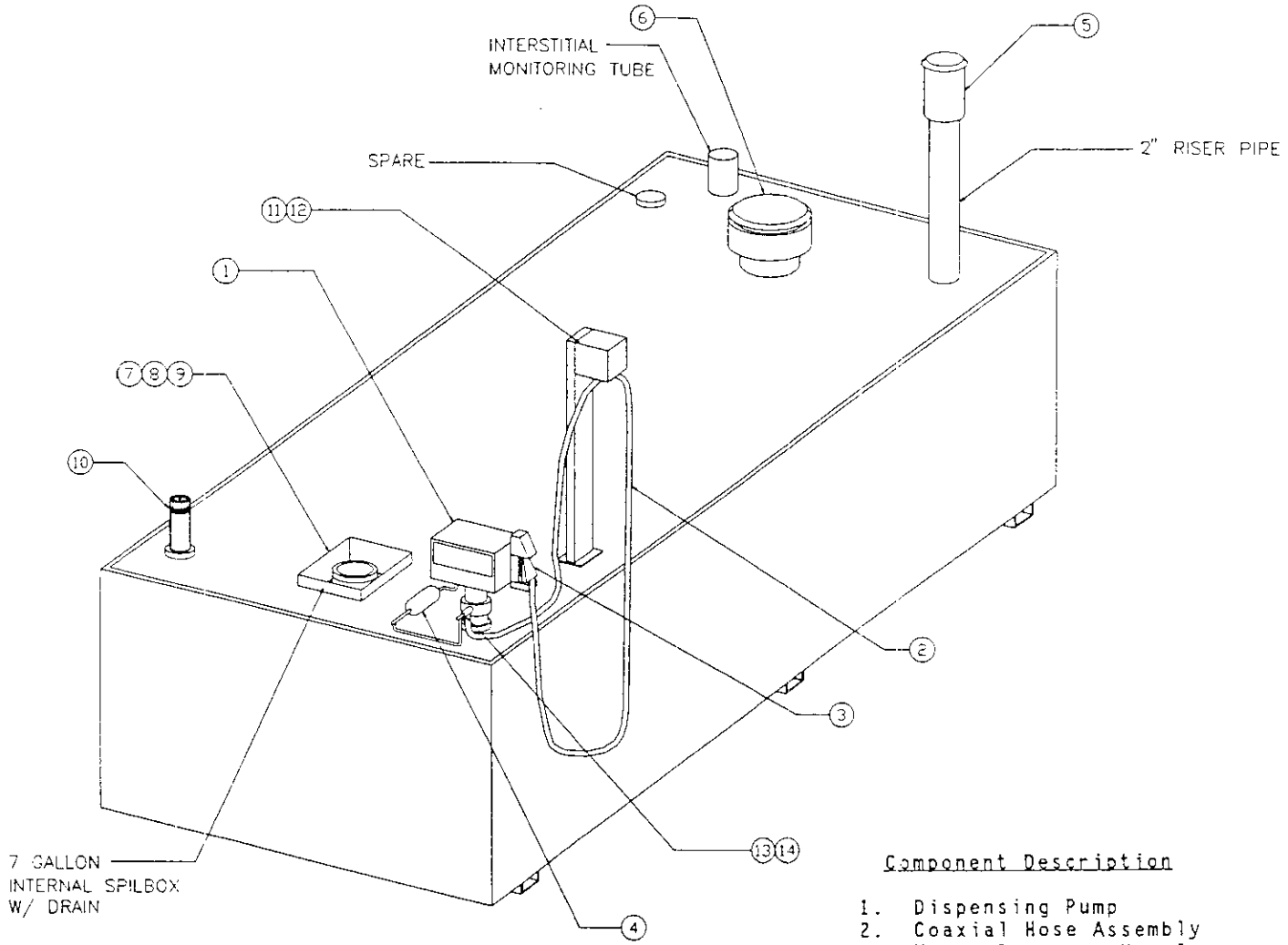

HOOVER GROUP, INC.

CONTAINMENT SYSTEMS DIVISION

Component Description

1. Dispensing Pump
2. Coaxial Hose Assembly
3. Vapor Recovery Nozzle
4. Fuel Filter Kit
5. Pressure/Vacuum Vent Valve
6. Emergency Vent
7. Coaxial Drop Tube
8. Fill Adaptor
9. Fill Cap
10. Level Gage
11. Hose Retractor
12. Hose Clamp
13. Coaxial Hose Adaptor
14. Coaxial Hose Clamp

Note: Tanks must be constructed with a minimum of six inches of concrete insulating material between the primary tank and the outer liner.

Exhibit 2

Executive Order G-70-148

Hoover Group, Inc., Lube Cube Aboveground Gasoline Vault
Tank Filling/Dispensing Vapor Recovery System

Construction Specifications

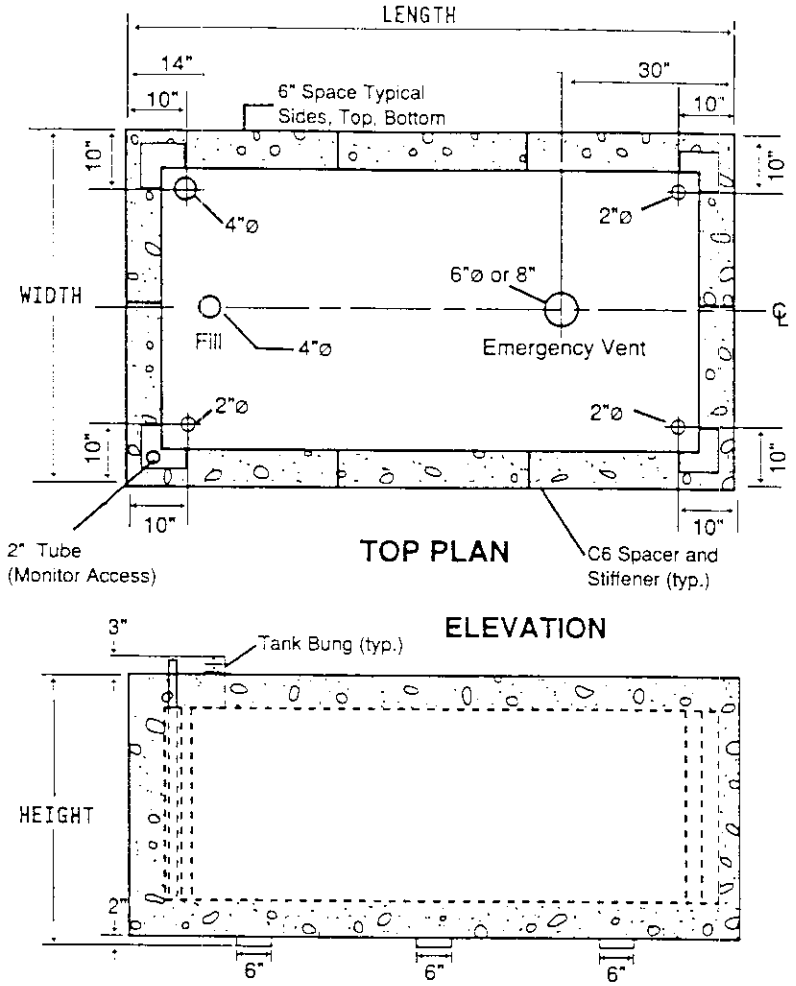

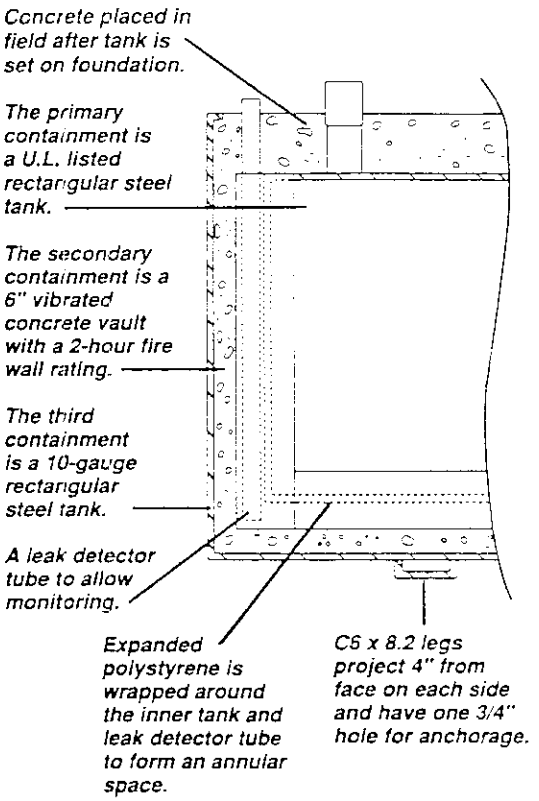

SIZE (GALLONS)	DIMENSIONS			CONCRETE REQUIRED	WEIGHTS		PRIMARY TANK THICKNESS
	WIDTH	LENGTH	HEIGHT		EMPTY	FULL	
250	3'-6"	7'-8"	3'-3"	1.8 yc.	1,100 lb.	8,500 lb.	10 ga.
500	4'-1"	11'-0"	3'-4"	2.8 yc.	1,700 lb.	13,500 lb.	10 ga.
1,000	4'-10"	11'-0"	4'-8"	3.9 yc.	2,500 lb.	18,500 lb.	10 ga.
1,500	5'-8"	12'-0"	4'-11"	4.9 yd.	3,000 lb.	23,000 lb.	10 ga.
2,000	7'-3"	12'-0"	5'-1"	6.0 yd.	3,700 lb.	28,500 lb.	10 ga.
3,000	7'-8"	13'-0"	6'-4"	7.5 yd.	7,500 lb.	38,360 lb.	7 ga.
4,000	7'-8"	15'-0"	7'-0"	8.9 yd.	8,800 lb.	45,533 lb.	7 ga.
5,000	7'-8"	16'-4"	7'-10"	10.3 yd.	10,900 lb.	53,300 lb.	1/4" pl.
6,000	7'-8"	19'-4"	7'-10"	11.8 yd.	12,500 lb.	61,000 lb.	1/4" pl.

Note: Tanks must be constructed with a minimum of six inches of concrete insulating material between the primary tank and the outer liner.

Exhibit 3

Executive Order G-70-148

Hoover Group, Inc., Lube Cube Aboveground Gasoline Vault Tank Filling/Dispensing Vapor Recovery System

Incorporated Phase I Vapor Recovery Components

Component	Manufacturer	Model
Fill Tube	OPW	61-TCP-3800
Fill Adaptor	OPW	633-TCP-3803
Fill Cap	OPW	634-TT
PV Vent Valve	Hazlett	H-PVB-1

Incorporated Phase II Vapor Recovery Components

Component	Manufacturer	Model
Nozzle	OPW	11VF
Hose Retractor	Universal	880
Coaxial Hose Clamp	Universal	4010
Coaxial Hose	Thermoid	Superlite HI-FLO
Coaxial Hose Adaptor	OPW	38-CS
Coaxial Hose Swivel	OPW	43-CF
Coaxial Hose Breakaway	OPW	66

Notes:

See Executive Order G-70-97-A (Exhibits 1, 2 & 3) and Executive Order G-70-142-A (Exhibits 1 & 2) for a listing of ARB certified Phase I two-point and coaxial vapor recovery equipment and components which may be used as an alternative to the equipment above.

See Executive Order G-70-52-AM and other G-70 series for ARB certified Phase II balance system vapor recovery equipment and components which may be used as an alternative to the equipment above.