State of California
AIR RESOURCES BOARD

Executive Order G-70-130-A

Certification of Sannipoli Corporation Petro Vault
Aboveground Tank Filling/Dispensing
Vapor Recovery System

WHEREAS, the Air Resources Board (the "Board") has established, pursuant to Sections 39600, 39601, and 41954 of the Health and Safety Code, certification procedures for systems designed for the control of gasoline vapor emissions displaced during the filling of storage tanks at service stations ("Phase I vapor recovery systems") and for the control of gasoline vapor emissions from motor vehicle fueling operations ("Phase II vapor recovery systems") in its "Certification Procedures for Gasoline Vapor Recovery Systems at Service Stations" as last amended December 4, 1981 (the "Certification Procedures"), incorporated by reference in Section 94001 of Title 17, California Code of Regulations;

WHEREAS, the Board has established, pursuant to Sections 39600, 39601, and 41954 of the Health and Safety Code, test procedures for determining compliance of Phase I and Phase II vapor recovery systems with emission standards in its "Test Procedures for Determining the Efficiency of Gasoline Vapor Recovery Systems at Service Stations" as last amended September 1, 1982 (the "Test Procedures"), incorporated by reference in Section 94000 of Title 17, California Code of Regulations;

WHEREAS, Sannipoli Corporation, has applied for certification of its Petro Vault aboveground storage tank vapor recovery system for use with gasoline and gasoline/methanol blended fuel and on single product tanks between 3,000 and 12,000 gallons total capacity, and utilizing top loading Phase I and bottom dispensing Phase II vapor recovery equipment;

WHEREAS, Section VIII-A of the Certification Procedures provides that the Executive Officer shall issue an order of certification if he or she determines that a vapor recovery system conforms to all of the requirements set forth in Sections I through VII; and

WHEREAS, I find that the Sannipoli Corporation Petro Vault aboveground storage tank vapor recovery system, when used with ARB Certified Phase I and Phase II balance vapor recovery components, conforms with all the requirements set forth in Sections I through VII of the Certification Procedures;

NOW, THEREFORE, IT IS HEREBY ORDERED that this certification applies to the Sannipoli Corporation Petro Vault aboveground storage tank vapor recovery system. The system certified by this order may be used with gasoline and gasoline/methanol blended fuel and on tanks between 3,000 and 12,000 gallons total capacity which utilize the same geometric configuration and design shown in Exhibits 1 and 2, attached, and are equipped with top loading Phase I and bottom dispensing Phase II vapor recovery equipment.

Use of Air Resources Board certified Phase I and Phase II vapor recovery components shall be a condition to certification. A listing of certified vapor recovery components incorporated by Sannipoli Corporation in their Petro Vault vapor recovery system is given for gasoline and gasoline/methanol blended fuels, respectively, in Exhibits 3 and 4, attached. In the alternative, Air Resources Board certified Phase I components from Exhibits 1 through 3 of Executive Order G-70-97-A and Exhibits 1 and 2 of Executive Order G-70-142-A and certified balance system Phase II components from Executive Order G-70 series may be used in gasoline vapor recovery systems. Air Resources Board certified Phase I and Phase II components from Exhibit 1 of Executive Order G-70-110 may be used in vapor recovery systems for gasoline/methanol blended fuels.

IT IS FURTHER ORDERED that the fuel dispensing unit be located at the base of the storage tank at a maximum distance approximating two (2) feet and in the configuration shown in Exhibit 1, attached. Associated vapor piping, fittings, and the vapor holding pot shall be as specified in Exhibit 1.

IT IS FURTHER ORDERED that a minimum of 6 inches of proprietary insulating material be installed between the interior holding tanks and the exterior containment tank of all storage tanks as shown in Exhibits 1 and 2.

IT IS FURTHER ORDERED that an Air Resource Board certified PV valve shall be installed on the tank vent and that the rated pressure relief setting of such valve be between 2.5 and 3.5 inches of water column gage. The installed PV valve shall extend to a minimum height of 12 feet above grade.

IT IS FURTHER ORDERED that the general exterior of the storage tanks be painted white.

IT IS FURTHER ORDERED that the threaded stem normally used with the Bobtail truck bulk delivery nozzle be replaced with an OPW 633-B coupler along with OPW 633-BA series coupler/adaptor(s) (or an equivalent arrangement that allows for no leakage of fuel) to connect the Bobtail truck bulk delivery nozzle with the storage tank fill adaptor (or coaxial fill adaptor) during transfer of fuel from the delivery truck to the storage tank.

IT IS FURTHER ORDERED that prior to using any Petro Vault tank for storage of gasoline or gasoline/methanol blended fuel the complete system shall be leak checked at or above the working pressure of the system (PV vent setting) and verified to be vapor tight. Thereafter, the complete system shall be checked once a year to ensure a vapor tight system and proper operation of the vapor recovery equipment. Leak checks shall be conducted in accordance with Section 1 of the Test Procedures.

IT IS FURTHER ORDERED that with the exception of maintenance, the vapor pot shall be sealed at all times. Condensate shall be removed at the intervals necessary to ensure proper and unrestricted vapor flow through the vapor pot.

IT IS FURTHER ORDERED that when bulk deliveries are being made by a cargo truck, rather than Bobtail truck, the truck pumping system be operated at a steady rate to limit the amount of vapor growth associated with a varied pumping rate. When clearing fuel from the pumping system (following fuel delivery) the operator shall likewise maintain a steady pump rate, since varying the pump speed (revving pump) may result in significant vapor growth.

IT IS FURTHER ORDERED that compliance with the rules and regulations of the local air pollution control district with jurisdiction where the installed system is located, shall be made a condition of this certification.

IT IS FURTHER ORDERED that the tank and associated piping and other equipment not specifically listed as approved Phase I equipment in Exhibits 3 and 4 of this Executive Order, Exhibits 1 through 3 of Executive Order G-70-97-A, Exhibits 1 and 2 of Executive Order G-70-142-A, or Exhibit 1 of Executive Order G-70-110, nor specifically listed as approved Phase II equipment in Exhibits 3 and 4 of this Executive Order, Exhibit 1 of Executive Order G-70-110, or in the Executive Order G-70 series shall comply with the rules and regulations of the local fire officials with jurisdiction where the installed system is located, and that the use of a PV vent shall require the prior approval of such local fire official.

IT IS FURTHER ORDERED that compliance with all applicable certification requirements and rules and regulations of the Division of Measurement Standards, the Office of the State Fire Marshal, and the Division of Occupational Safety and Health of the Department of Industrial Relations shall be made a condition of this certification.

IT IS FURTHER ORDERED that any alteration of the equipment, parts, design, or operation of configurations certified hereby, is prohibited, and deemed inconsistent with this certification, unless such alteration has been approved by the undersigned or the Executive Officer's designee.

Executed this 26 day of February, 1993, at Sacramento, California.

Jim Corkett for
James D. Boyd
Executive Officer

Exhibit 1

Executive Order G-70-130-A

Sannipoli Corporation Petro Vault Aboveground
Tank Filling/Dispensing Vapor Recovery System

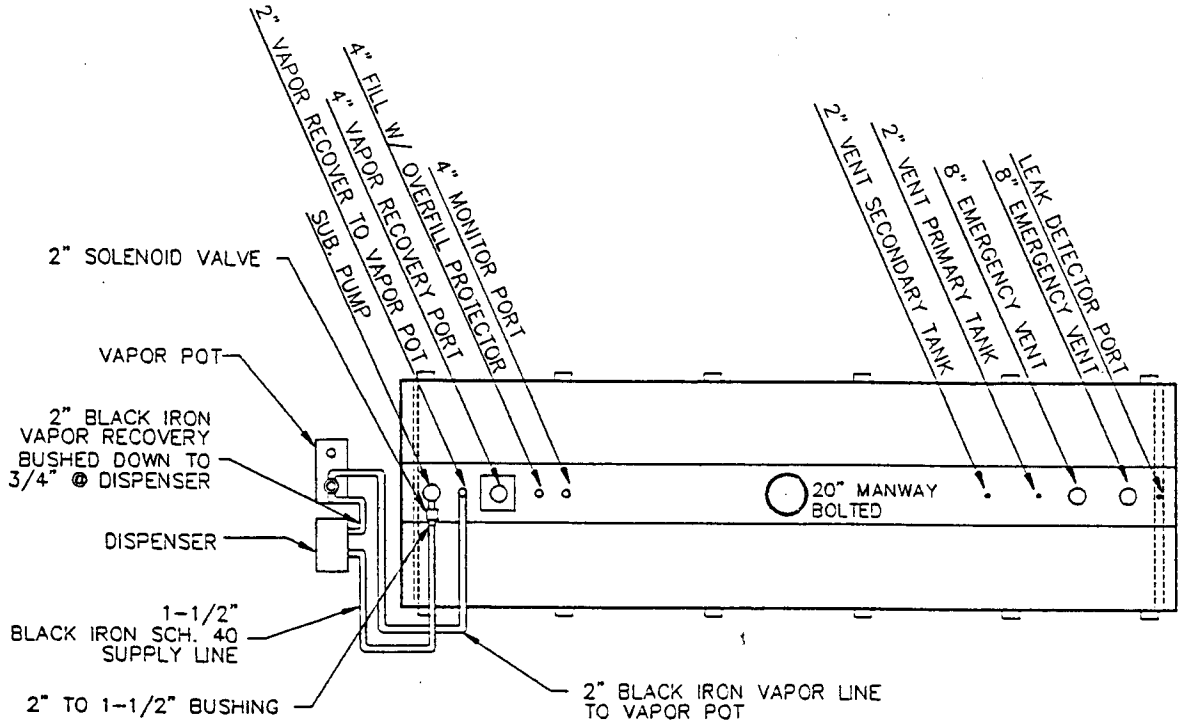

PLAN VIEW

NOT TO SCALE

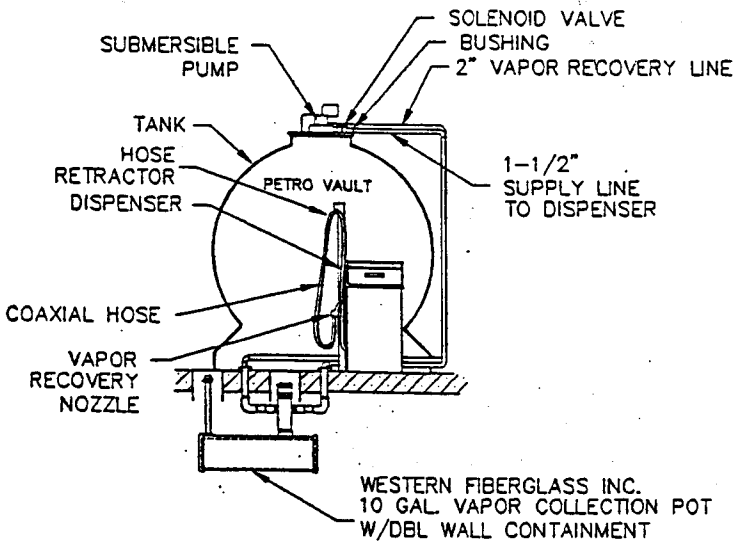

FRONT VIEW

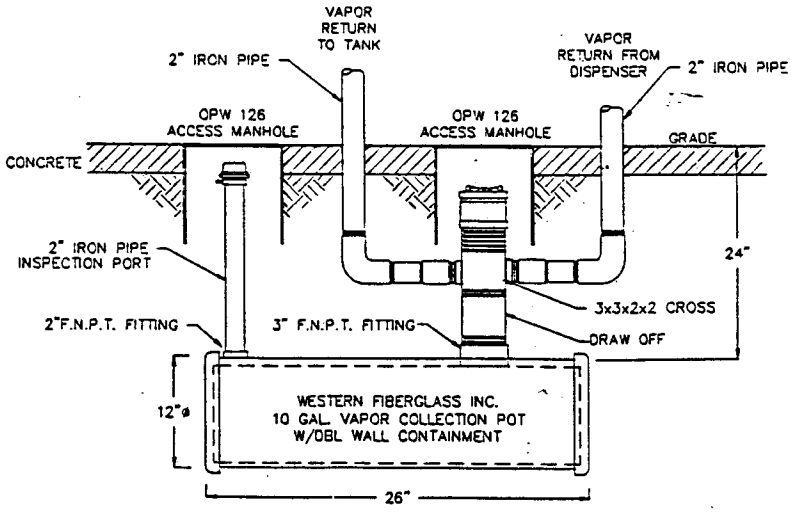

VAPOR COLLECTION POT DETAIL

Notes:

A minimum of 6 inches of proprietary insulating material between the interior holding tank and the exterior containment tank.

The tank vent line shall extend to a minimum height of 12 feet above grade.

Exhibit 2

Executive Order G-70-130-A

Sannipoli Corporation Petro Vault Aboveground Tank Filling/Dispensing Vapor Recovery System

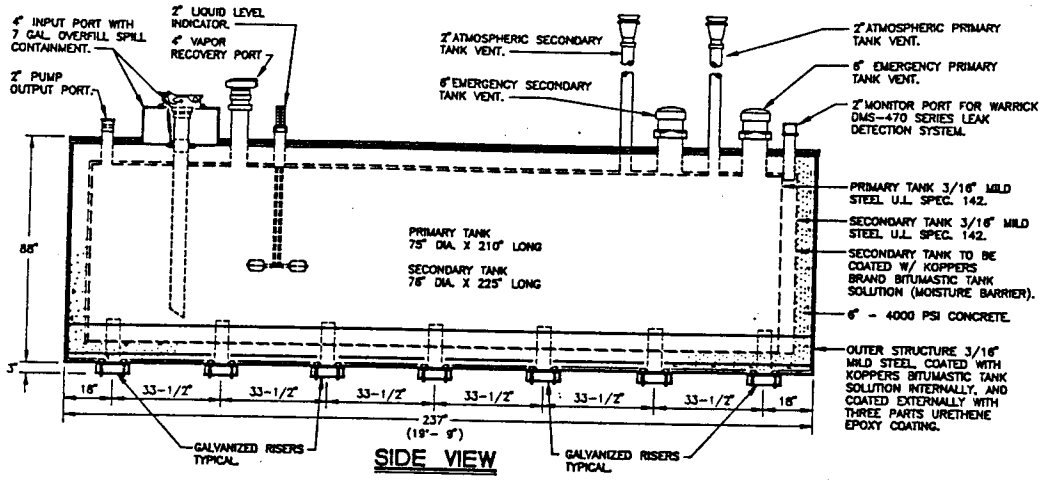

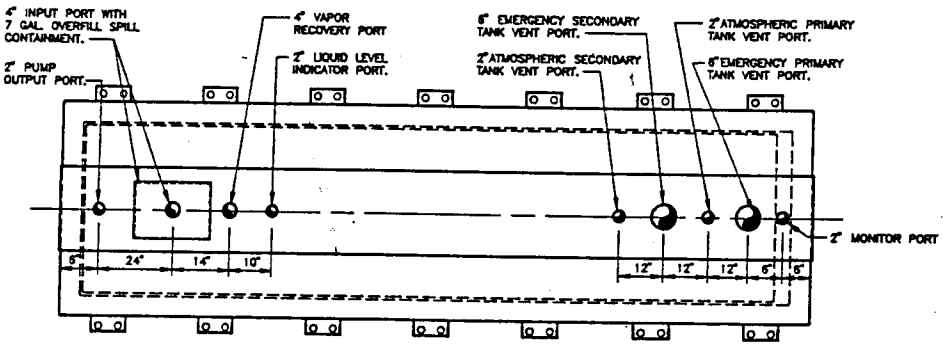

TOP VIEW

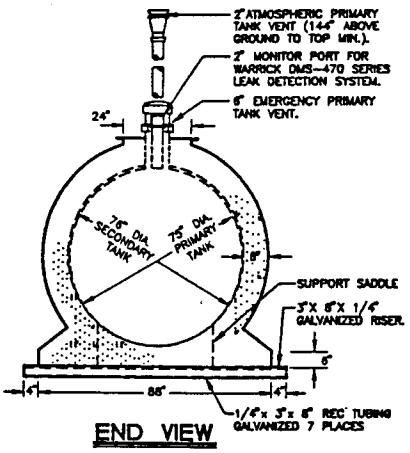

END VIEW

Petro Vault Dimensions

Tank Size	Height	Length	Diameter
3,000 gal.	82 in.	212 in.	85 in.
4,000	91	237	88
5,000	91	294	88
6,000	99	306	94
8,000	109	306	106
10,000	109	380	106
12,000	121	384	115

Notes:

Typical Petro Vault aboveground storage tank. Tank size shown 4000 gallons.

Exhibit 3

Executive Order G-70-130-A

Sannipoli Corporation Petro Vault Aboveground Tank Filling/Dispensing Vapor Recovery System

Gasoline Vapor Recovery System

Incorporated Phase I Vapor Recovery Components

Component	Manufacturer	Model
Fill Tube	OPW	61 SO
Fill Adaptor	OPW	633T
Fill Cap	OPW	634TT
Vapor Adaptor	OPW	1611AV
Vapor Cap	OPW	1711T
PV Vent Valve	Hazlett	H-PVB-1

Incorporated Phase II Vapor Recovery Components

Component	Manufacturer	Model
Nozzle	OPW	11VF-47
Hose Retractor	Pomeco	100-AG
Coaxial Hose	Goodyear	Maxxim
Coaxial Hose Adaptor	OPW	38CS

Notes:

See Executive Order G-70-97-A (Exhibits 1, 2 & 3) and Executive Order G-70-142-A (Exhibits 1 & 2) for a listing of ARB certified Phase I two-point and coaxial vapor recovery equipment and components which may be used as an alternative to the equipment above.

See Executive Order G-70 series for ARB certified Phase II balance system vapor recovery equipment and components which may be used as an alternative to the equipment above.

Exhibit 4

Executive Order G-70-130-A

Sannipoli Corporation Petro Vault Aboveground Tank Filling/Dispensing Vapor Recovery System

Gasoline/Methanol Vapor Recovery System

Incorporated Phase I Vapor Recovery Components

Component	Manufacturer	Model
Fill Tube	OPW	61 SOM
Fill Adaptor	OPW	6337J
Fill Cap	OPW	634TT
Vapor Adaptor	OPW	1611AVO
Vapor Cap	OPW	1711T
PV Vent Valve	Hazlett	H-PVB-1

Incorporated Phase II Vapor Recovery Components

Component	Manufacturer	Model
Nozzle	OPW	11VF-47 M85
Hose Retractor	Pomeco	100-AG
Coaxial Hose	Goodyear	Maxxim M85
Coaxial Hose Adaptor	OPW	38-CS

Notes:

See Executive Order G-70-110 (Exhibit 1) for a listing of ARB certified Phase I and Phase II vapor recovery equipment and components which may be used as an alternative to the equipment above.