State of California
AIR RESOURCES BOARD

Executive Order G-70-143

Certification of Teichert Precast P/T Vault
Aboveground Tank Filling/Dispensing
Vapor Recovery System

WHEREAS, the Air Resources Board (the "Board") has established, pursuant to Sections 39600, 39601, and 41954 of the Health and Safety Code, certification procedures for systems designed for the control of gasoline vapor emissions displaced during the filling of storage tanks at service stations ("Phase I vapor recovery systems") and for the control of gasoline vapor emissions from motor vehicle fueling operations ("Phase II vapor recovery systems") in its "Certification Procedures for Gasoline Vapor Recovery Systems at Service Stations" as last amended December 4, 1981 (the "Certification Procedures"), incorporated by reference in Section 94001 of Title 17, California Code of Regulations;

WHEREAS, the Board has established, pursuant to Sections 39600, 39601, and 41954 of the Health and Safety Code, test procedures for determining compliance of Phase I and Phase II vapor recovery systems with emission standards in its "Test Procedures for Determining the Efficiency of Gasoline Vapor Recovery Systems at Service Stations" as last amended September 1, 1982 (the "Test Procedures"), incorporated by reference in Section 94000 of Title 17, California Code of Regulations;

WHEREAS, Teichert Precast has applied for certification of its aboveground gasoline tank for balance Phase I and Phase II operation for single product tanks up to 1,000 gallons total capacity;

WHEREAS, Section VIII-A of the Certification Procedures provides that the Executive Officer shall issue an order of certification if he or she determines that a vapor recovery system conforms to all of the requirements set forth in Sections I through VII; and

WHEREAS, I find that the Teichert Precast P/T Vault aboveground gasoline tank vapor recovery system, when used with ARB Certified Phase I and Phase II balance system vapor recovery components, conforms with all the requirements set forth in Sections I through VII of the Certification Procedures;

NOW, THEREFORE, IT IS HEREBY ORDERED that this certification applies to the Teichert Precast P/T Vault aboveground gasoline tank vapor recovery system. The system certified hereby is shown in Exhibit 1 attached and includes single product tanks up to 1,000 gallons total capacity.

Air Resources Board certified Phase I components from Exhibits 1 through 3 of Executive Order G-70-97-A and certified balance system Phase II components from Executive Order G-70 series are to be used.

IT IS FURTHER ORDERED that any emergency vent installed on the tanks be leak free at the operating pressure of the tank when tested in accordance with ARB Method 2-6, "Test Procedures for Gasoline Vapor Leak Detection Using Combustible Gas Detector" as last amended September 1, 1982 (the "Test Procedures"), incorporated by reference in Section 94007 of Title 17, California Code of Regulations.

IT IS FURTHER ORDERED that the threaded stem normally used with the Bobtail truck bulk delivery nozzle be replaced with an OPW 633-B coupler along with OPW 633-BA series coupler/adaptor(s) (or an equivalent arrangement that allows for no leakage of gasoline) to connect the Bobtail truck bulk delivery nozzle with the storage tank fill adaptor (or coaxial fill adaptor) during transfer of gasoline from the delivery truck to the storage tank.

IT IS FURTHER ORDERED that the general exterior of the storage tanks be painted white.

IT IS FURTHER ORDERED that compliance with the rules and regulations of the local air pollution control district with jurisdiction where the installed system is located, shall be made a condition of this certification.

IT IS FURTHER ORDERED that the tank and associated piping and other equipment not specifically listed as approved Phase I equipment in Exhibits 1 through 3 of Executive Order G-70-97-A nor specifically listed as approved Phase II equipment in Executive Order G-70 series shall comply with the rules and regulations of the local fire officials with jurisdiction where the installed system is located, and that the use of a PV valve shall require the prior approval of such local fire offical.

IT IS FURTHER ORDERED that compliance with all applicable certification requirements and rules and regulations of the Division of Measurement Standards, the Office of the State Fire Marshal, and the Division of Occupational Safety and Health of the Department of Industrial Relations shall be made a condition of this certification.

IT IS FURTHER ORDERED that any alteration of the equipment, parts, design, or operation of the configurations certified hereby, is prohibited, and deemed inconsistent with this certification, unless such alteration has been approved by the undersigned or the Executive Officer's designee.

Executed this 7th day of August 1992, at Sacramento, California.

James D. Boyd
Executive Officer

Exhibit 1

Executive Order G-70-143

Teichert Precast P/T Vault Aboveground Gasoline
Tank Filling/Dispensing Vapor Recovery System

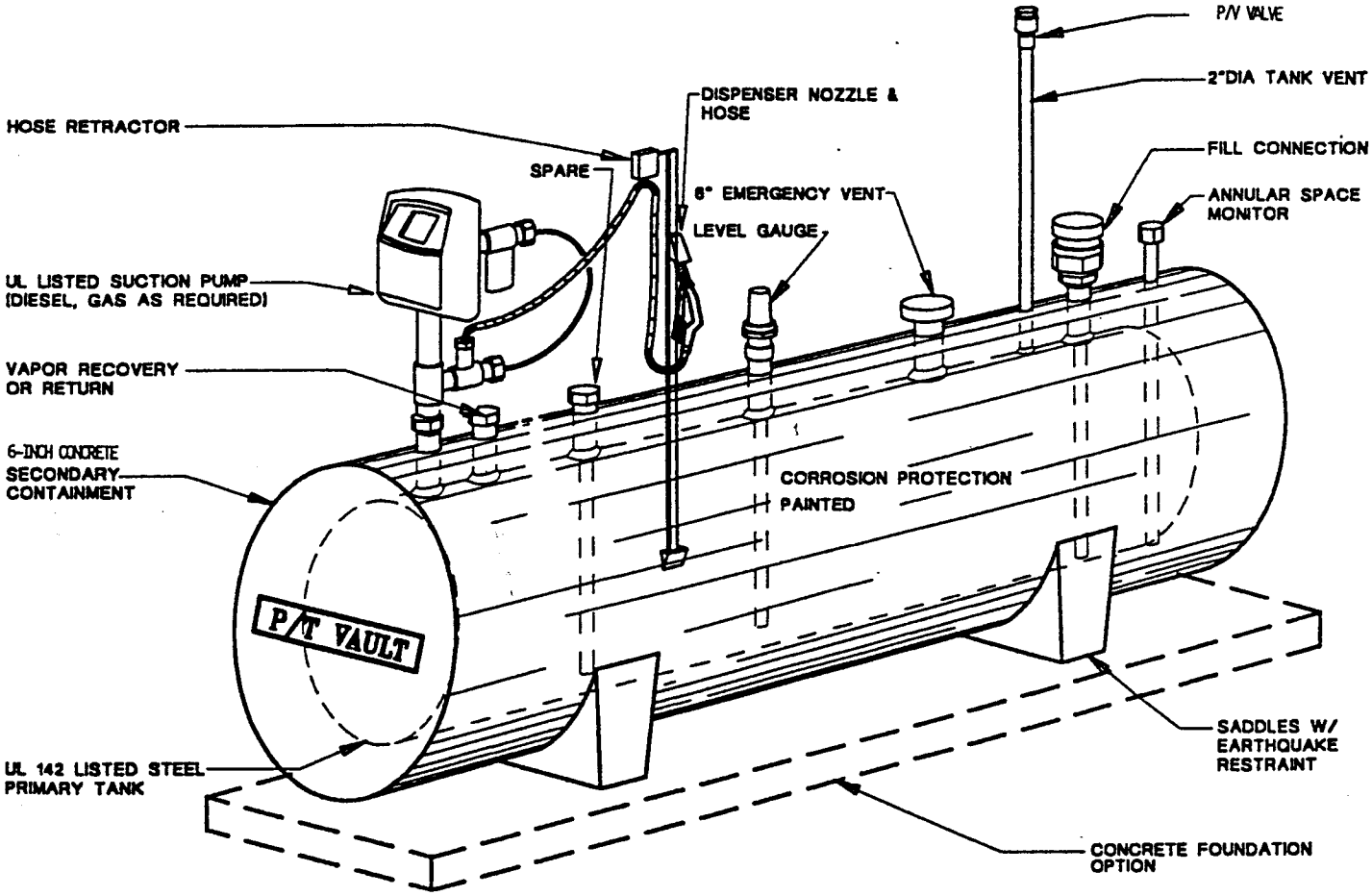

Notes:

See Executive Order G-70-97-A (Exhibits 1, 2 & 3) for listing of ARB certified Phase I two-point and coaxial vapor recovery equipment and pressure/vacuum valves for storage tanks.

See Executive Order G-70 series for ARB certified Phase II balance system vapor recovery equipment.