State of California
AIR RESOURCES BOARD

Executive Order G-70-155

Certification of Petroleum Marketing Services'
Aboveground Tank Filling & Dispensing
Vapor Recovery Systems

WHEREAS, the Air Resources Board (the "Board") has established, pursuant to California Health and Safety Code sections 39600, 39601, and 41954, certification procedures for systems designed to control gasoline vapor emissions displaced during the filling of service station storage tanks ("Phase I vapor recovery systems") and for systems designed to control gasoline vapor emissions from motor vehicle fueling operations ("Phase II vapor recovery systems") in its "Certification Procedures for Gasoline Vapor Recovery Systems at Service Stations", amended December 4, 1981 (the "Certification Procedures"), and incorporated by reference in Title 17, California Code of Regulations section 94001;

WHEREAS, the Board has established, pursuant to California Health and Safety Code sections 39600, 39601, and 41954, test procedures to determine the compliance of Phase I and Phase II vapor recovery systems with emission standards in its "Test Procedures for Determining the Efficiency of Gasoline Vapor Recovery Systems at Service Stations", amended September 1, 1982 (the "Test Procedures"), incorporated by reference in Title 17, California Code of Regulations section 94000;

WHEREAS, Rex Dawson, president of Petroleum Marketing Services, has applied for certification of his company's aboveground gasoline storage tank vapor recovery system for use in balance Phase I and Phase II operations;

WHEREAS, Section VIII-A of the Certification Procedures provides that the Executive Officer shall issue an order of certification if he or she determines that a vapor recovery system conforms to all of the requirements set forth in Certification Procedures Sections I through VII; and

WHEREAS, I, James D. Boyd, California Air Resources Board Executive Officer, have determined that the Petroleum Marketing Services' aboveground storage tank vapor recovery systems, when used with ARB Certified Phase I and Phase II balance vapor recovery components, conforms with all the requirements set forth in Sections I through VII of the Certification Procedures;

NOW, THEREFORE, IT IS HEREBY ORDERED that this certification applies to the Petroleum Marketing Services' aboveground gasoline storage tank vapor recovery systems. The systems certified by this order may be used on single product tanks between 550 and 6,000 gallons total capacity which utilize the same geometric configuration and design shown in Exhibits 1 and 2, attached, and are equipped with remote top loading Phase I and top dispensing Phase II vapor recovery equipment.

IT IS FURTHER ORDERED that the use of Air Resources Board certified Phase I and Phase II vapor recovery components shall be a condition of the certification. Certified vapor recovery components installed by Petroleum Marketing Services' on the aboveground storage tank vapor recovery systems

are identified in Exhibit 1, attached. In the alternative, Air Resources Board certified Phase I components from Exhibits 1 through 3 of Executive Order G-70-97-A, Exhibits 1 and 2 of Executive Order G-70-102-A, or Exhibits 1 and 2 of Executive Order G-70-142-A may be used and Air Resources Board certified balance system Phase II components from Executive Orders in the G-70 series may be used. Additional Phase I and Phase II components for use on Air Resources Board certified gasoline vapor recovery systems may be found in Vapor Recovery Approval letters signed by the Executive Officer's designee.

IT IS FURTHER ORDERED that in order to prevent spitback or condensate from blocking the vapor path between the vehicle fill pipe and the storage tank headspace, the routing of the coaxial hose shall be consistent with the configurations shown in exhibits 4 through 11a in CARB Executive Order G-70-52-AM, with the exception that the highest point in the vapor return path must be above the the top of the storage tank and there shall be no liquid trap in the vapor path between the highest point in the vapor return path and the storage tank vapor headspace during fuel dispensing. Furthermore, there shall be no liquid trap in the vapor path between the vehicle fill pipe and the highest point in the vapor return path during fuel dispensing unless the coaxial hose is equipped with a liquid removal system with the liquid pickup located at the liquid trap.

IT IS FURTHER ORDERED that inner tank be completely surrounded with an insulating blanket with a two inch thickness, a density of eight pounds per cubic foot and an R-Value of 2.0/inch at 600 degrees Fahrenheit.

IT IS FURTHER ORDERED that an Air Resource Board certified P/V valve shall be installed on the tank vent and that the pressure relief setting of such valve shall be between 2.5 and 3.5 inches of water column gage.

IT IS FURTHER ORDERED that the installed P/V valve shall extend to a height which is at least 12 feet above grade.

IT IS FURTHER ORDERED that the general exterior of the storage tanks be painted white.

IT IS FURTHER ORDERED that the components and piping configuration used to connect the cargo truck bulk delivery line and vapor return line to the storage tank fill line and vapor recovery line shall be consistent with Air Resources Board Executive Order G-70-102-A and that the liquid leak rate upon disconnecting the delivery line shall be no more than 10 ml per disconnect computed from the average of three disconnect operations.

IT IS FURTHER ORDERED that prior to using any Petroleum Marketing Systems tank for storage of gasoline the complete vapor recovery system shall be leak checked at 150 percent of the maximum working pressure of the system (P/V vent setting), or 5 inches of water column pressure, whichever is greatest, and verified to be vapor tight. Thereafter, the complete system shall be checked once a year to ensure a vapor tight system and proper operation of the vapor recovery equipment. Leak checks shall be conducted in accordance with the Test Procedures.

IT IS FURTHER ORDERED that during bulk deliveries the cargo truck pumping system shall be operated at a steady flow rate which is less than 80 gallons per minute. Using the pump to clear fuel from the delivery line is prohibited if it results in pumping vapor through the gasoline storage tank since this practice may result in significant vapor growth and additional venting from the Storage tank vent line.

IT IS FURTHER ORDERED that compliance with the rules and regulations of the local air pollution control district with jurisdiction over the location where the system is installed, shall be made a condition of this certification.

IT IS FURTHER ORDERED that the tank, associated piping and other equipment not specifically listed as approved Phase I equipment in Exhibits 1 through 3 of Executive Order G-70-97-A, Exhibits 1 and 2 of Executive Order G-70-102-A or Exhibits 1 and 2 of Executive Order G-70-142-A, nor specifically listed as approved Phase II equipment in the Executive Order G-70 series shall comply with the rules and regulations of the local fire officials with jurisdiction over the location where the system is installed and that the use of a P/V vent shall require the prior approval of such local fire official.

IT IS FURTHER ORDERED that compliance with all applicable certification requirements and rules and regulations of the Division of Measurement Standards, the Office of the State Fire Marshal, and the Division of Occupational Safety and Health of the Department of Industrial Relations shall be made a condition of this certification.

IT IS FURTHER ORDERED that any alteration of the equipment, parts, design, or operation of configurations certified hereby, is prohibited, and deemed inconsistent with this certification, unless such alteration has been approved by the Executive Officer or his or her designee.

Executed this 12 day of March, 1994 at Sacramento, California.

Jon Corbitt for
James D. Boyd
Executive Officer

Exhibit 1

Executive Order G-70-155
Petroleum Marketing Systems Aboveground Tank Filling/Dispensing Vapor Recovery System

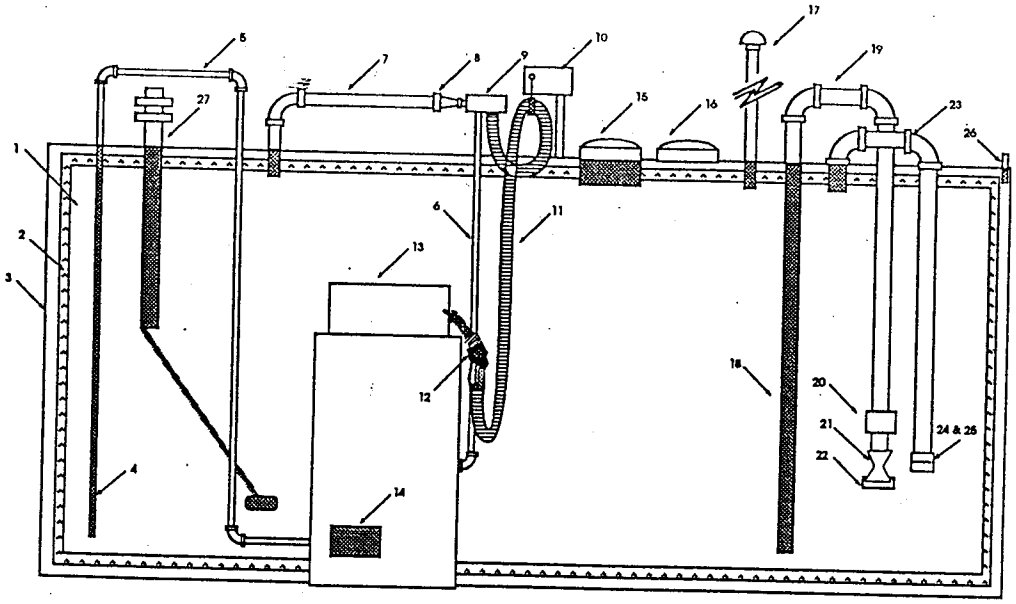

Petroleum Marketing Services Abovegound Fuel Storage Tank

Component Identification List
As Tested Prototype Installation

1.	Primary Tank	UL 142 Listed
2.	Insulating Blanket	2 Inch thickness 8 lb/ft^3 density R value = 2.0/inch at 600 degrees F
3.	Secondary Tank	UL 142 Listed
4.	Suction Tube	1" Schedule 40
5.	Product Piping Pump Supply	1" Schedule 40
6.	Product Piping Pump Discharge	1" Schedule 40
7.	Phase II Vapor Return Line	2" Schedule 40
8.	Bell Reducer	2"x3/4" Schedule 40
9.	Coaxial Hose Adaptor	OPW 38 CS
10.	High Hang Hose Retractor	Pomeco 100 AG
11.	Coaxial Hose	Thermoid Superlite
12.	Phase II Nozzle	OPW 11VF
13.	Fuel Pump and Totalizing Meter	FILLRITE 702 VR
14.	Antisyphon/Sheer Valve	Tokheim 52 valve
15	Primary Tank Emergency Vent	6" Morrison 244
16.	Secondary Tank Emergency Vent	6" Morrison 244
17.	2" Vent Pipe & PV Relief Valve	Hazlett H-PVB-1, 3"H20 pressure 9"H20 vacuum
18.	Bulk Fill Drop Tube	OPW 61T
19.	Bulk Fill Line	3" Schedule 40
20.	Ball Valve	3" Jomar
21.	Bulk Fill Dry Break	OPW 1611-AN-2000
22.	Bulk Fill Line Cap	OPW 634 BK-0100
23.	Phase I Vapor Return Line	3" Schedule 40
24.	Phase I Poppeted Vapor Return Line Adaptor	OPW 1611-AV
25.	Vapor Return Line Cap	OPW 1711T
26.	Annulus Level Gage	Kruger
27.	Fuel Level Gauge	Kruger

Notes:

See Executive Order G-70-97-A (Exhibits 1, 2 & 3) and Executive Order G-70-142-A (Exhibits 1 & 2) for a listing of ARB certified Phase I two-point and coaxial vapor recovery equipment and components which may be used as an alternative to the equipment above.

See Executive Order G-70 series for ARB certified Phase II balance system vapor recovery equipment and components which may be used as an alternative to the equipment above.

Exhibit 2

Executive Order G-70-155
Petroleum Marketing Systems Aboveground
Tank Filling/Dispensing Vapor Recovery System

NOMINAL DOUBLEWALL ABOVEGROUND TANK LENGTH CHART

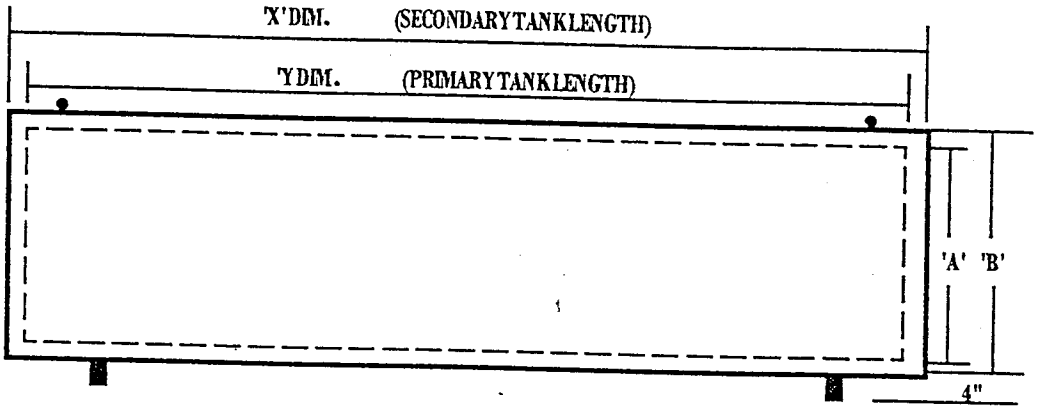

GALLONS	PRIMARY Y' DIM.	SECONDARY X' DIM.	PRIMARY A' DIM.	SECONDARY B' DIM.	TANK THICKNESS
550	69.000"	73.000"	49.750"	54.000"	10 GA.
1,000	120.000"	132.000"	49.750"	54.000"	10 GA
2,000	120.000"	132.250"	71.625"	76.000"	0.188"
3,000	179.500"	191.500"	71.625"	76.000"	0.188"
4,000	144.000"	156.000"	92.000"	96.500"	0.250"
5,000	179.500"	194.500"	92.000"	96.500"	0.250"
6,000	215.500"	230.750"	92.000"	96.500"	0.250"