State of California
AIR RESOURCES BOARD

Executive Order G-70-157

Certification of RECoVAULT Incorporated
Ecovault Aboveground Tank Filling & Dispensing
Balance Vapor Recovery System

WHEREAS, the Air Resources Board (the "Board") has established, pursuant to California Health and Safety Code sections 39600, 39601, and 41954, certification procedures for systems designed to control gasoline vapor emissions displaced during the filling of service station storage tanks ("Phase I vapor recovery systems") and for systems designed to control gasoline vapor emissions from motor vehicle fueling operations ("Phase II vapor recovery systems") in its "Certification Procedures for Gasoline Vapor Recovery Systems at Service Stations", amended December 4, 1981, (the "Certification Procedures"), and incorporated by reference in Title 17, California Code of Regulations section 94001;

WHEREAS, the Board has established, pursuant to California Health and Safety Code sections 39600, 39601, and 41954, test procedures to determine compliance of Phase I and Phase II vapor recovery systems with emission standards in its "Test Procedures for Determining the Efficiency of Gasoline Vapor Recovery Systems at Service Stations", amended September 1, 1982 (the "Test Procedures"), incorporated by reference in Title 17, California Code of Regulations section 94000;

WHEREAS, RECoVAULT, Incorporated has applied for certification of its Ecovault aboveground gasoline storage tank vapor recovery system for use in balance Phase I and Phase II operations on single and split compartment compartment tanks between 550 and 2000 gallons total capacity;

WHEREAS, Section VIII-A of the Certification Procedures provides that the Executive Officer shall issue an order of certification if he or she determines that a vapor recovery system conforms to all of the requirements set forth in Certification Procedures Sections I through VII; and

WHEREAS, on April 15, 1994, the Air Resources Board Executive Officer pursuant, to California Health and Safety Codes sections 39515 and 39516, delegated to the Chief, Compliance Division full authority to approve and grant Executive Orders certifying integral Phase I and Phase II aboveground systems in accordance with California Health and Safety Code section 41954; and

WHEREAS, I, James J. Morgester, Chief of the Compliance Division of the California Air Resources Board, have determined that the RECoVAULT Incorporated Ecovault aboveground storage tank vapor recovery systems, when used with ARB Certified Phase I and Phase II balance vapor recovery components, conforms to all the requirements set forth in Sections I through VII of the Certification Procedures;

NOW, THEREFORE, IT IS HEREBY ORDERED that this certification applies to the RECoVAULT Incorporated Ecovault aboveground gasoline storage tank vapor

recovery systems. The systems certified by this order may be used on either single tank or split tank configurations between 550 and 2000 gallons total capacity, which utilize the same geometric configuration and design shown in Exhibits 1 and 2, attached.

IT IS FURTHER ORDERED that the minimum compartment size in split tank configurations shall be greater than or equal to 500 gallons capacity.

IT IS FURTHER ORDERED that the inner tank shall be completely encased in a vault of six inch thick concrete that is constructed in a manner that allows for an insulating annular air space between the inner tank and the concrete vault.

IT IS FURTHER ORDERED that the use of Air Resources Board certified Phase I and Phase II vapor recovery components shall be a condition of this certification. Certified vapor recovery components installed by RECoVAULT Incorporated on the Ecovault aboveground storage tank vapor recovery systems, as tested, are identified in Exhibit 1, attached. In the alternative, Air Resources Board certified Phase I components from Exhibits 1 through 3 of Executive Order G-70-97-A, Exhibits 1 and 2 of Executive Order G-70-102-A, or Exhibits 1 and 2 of Executive Order G-70-142-A may be used and Air Resources Board certified balance system Phase II components from Executive Orders in the G-70 series may be used.

IT IS FURTHER ORDERED that in order to prevent spitback or condensate from blocking the vapor path between the vehicle fill pipe and the storage tank headspace, the routing of the coaxial hose shall be consistent with one of the configurations shown in exhibits 4 through 11a in Air Resources Board Executive Order G-70-52-AM, with the exception that the highest point in the vapor return path must be above the the top of the storage tank and there shall be no liquid trap in the vapor path between the highest point in the vapor return path and the storage tank vapor headspace during fuel dispensing. Furthermore, there shall be no liquid trap in the vapor path between the vehicle fill pipe and the highest point in the vapor return path during fuel dispensing unless the coaxial hose is equipped with a liquid removal system with the liquid pickup located at the liquid trap.

IT IS FURTHER ORDERED that an Air Resource Board certified P/V valve shall be installed on the tank vent and that the pressure relief setting of such valve shall be between 2.5 and 3.5 inches of water column gauge.

IT IS FURTHER ORDERED that the installed P/V valve shall extend to a height which is at least 12 feet above grade.

IT IS FURTHER ORDERED that the general exterior of the storage tanks shall be painted white.

IT IS FURTHER ORDERED that the threaded stem normally used with the Bobtail truck bulk delivery nozzle shall be replaced with an OPW 633-B coupler in conjunction with an OPW 633-BA series coupler/adaptor(s) (or an equivalent arrangement that prevents gasoline leakage) to connect the Bobtail truck bulk delivery nozzle with the storage tank fill adaptor (or coaxial fill adaptor) during transfer of gasoline from the delivery truck to the storage tank.

IT IS FURTHER ORDERED that the components and piping configuration used to connect the cargo truck bulk delivery line and vapor return line to the storage tank fill line and vapor recovery line shall be consistent with Air Resources Board Executive Order G-70-102-A and that the liquid leak rate upon disconnecting the delivery line shall be no more than 10 ml per disconnect computed from the average of three disconnect operations.

IT IS FURTHER ORDERED that during bulk deliveries the cargo truck pumping system shall be operated at a steady flow rate which is less than 80 gallons per minute. Using the pump to clear fuel from the delivery line is prohibited if vapor is pumped through the gasoline storage tank since this practice may result in significant vapor growth and additional venting from the storage tank vent line.

IT IS FURTHER ORDERED that prior to using any RECoVault Incorporated Ecovault above ground tank for storage of gasoline the complete vapor recovery system shall be leak checked at either 150 percent of the maximum working pressure of the system (P/V vent setting), or 5 inches of water column gauge pressure, whichever is greater, and verified to be vapor tight. Thereafter, the complete system shall be leak checked annually,in accordance with the Test Procedures.

IT IS FURTHER ORDERED that compliance with the rules and regulations of the local air pollution control district with jurisdiction over the location of the installed system, shall be made a condition of this certification.

IT IS FURTHER ORDERED that the tank and associated piping and other equipment not specifically certified as Phase I equipment in Exhibits 1 through 3 of Executive Order G-70-97-A, Exhibits 1 and 2 of Executive Order G-70-102-A or Exhibits 1 and 2 of Executive Order G-70-142-A, nor specifically certified as Phase II equipment in the Executive Order G-70 series shall comply with the rules and regulations of the local fire officials with jurisdiction over the location of the installed system.

IT IS FURTHER ORDERED that compliance with all applicable certification requirements and rules and regulations of the Division of Measurement Standards, the Office of the State Fire Marshal, and the Division of Occupational Safety and Health of the Department of Industrial Relations shall be made a condition of this certification.

IT IS FURTHER ORDERED that any alteration of the equipment, parts, design, or operation of configurations certified hereby, is prohibited, and deemed inconsistent with this certification, unless such alteration has been approved by the Executive Officer.

Executed this 23RD day of MAY, 1994, at Sacramento, California.

James J. Morgester, Chief
Compliance Division

Exhibit 1

Executive Order G-70-157
RECoVAULT Incorporated Ecovault Above Ground Tank
Filling/Dispensing Vapor Recovery System

	ITEM	MODEL/PART
1	2" TEST WELL CAP & ADAPTER	MORRISON 178XB
2	6" 16oz. EMERGENCY VENT	CLAY & BAILEY 368
3	2" PRESSURE VACUUM VENT, 3" H_2O NOMINAL PRESSURE	HAZLETT PUB-1
4	2" X 6' VENT EXTENSION & COUPLING	LOCAL SUPPLY
5	4" X 2" BELL REDUCER	LOCAL SUPPLY
6	4" GALVANIZED TEE	LOCAL SUPPLY
7	3" VAPOR RECOVERY CAP	OPW 1711T
8	3" X 4" VAPOR RECOVERY ADAPTER	OPW 1611AV
9	7 GAL INTERNAL OVERSPILL W/DRAIN	POMECO 211-7
10	4" LOCKABLE FILL ADAPTER CAP	OPW 634TT
11	4" BRONZE FILL ADAPTER	OPW 633TB
12	4" DROP TUBE	MORRISON 419
13	VAPOR RECOVERY NOZZLE	EMCO A 4005
14	COAXIAL HOSE	GOODYEAR MAX II
15	HIGH HOSE RETRACTOR STAND	POMECO 100-AG
16	PUMP	GASBOY 1820S
17	2" X 3/4" GALVANIZED TEE	LOCAL SUPPLY
18	COAXIAL HOSE ADAPTER	OPW 38CS
19	3/4" FILTER/ADAPTER & 2" NIPPLE	CIM 300-10/200H
20	1" GALVANIZED SUPPLY TUBE	LOCAL SUPPLY
21	GALV. STEPS, PLATFORM & HANDRAIL	ECOVAULT SPH44

EcoVault ®
GAS DISPENSING, STAGE II
TOP MOUNT PUMP

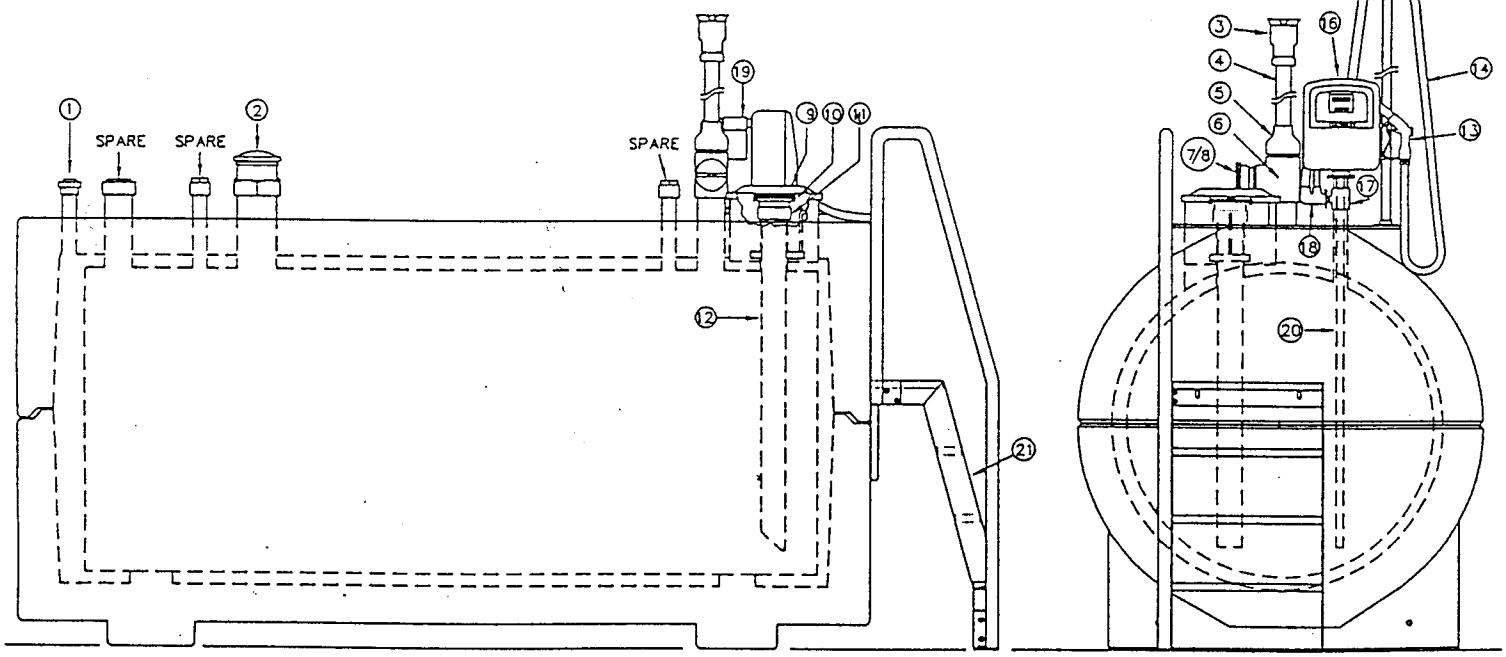

Notes:

See Executive Order G-70-97-A (Exhibits 1, 2 & 3) and Executive Order G-70-142-A (Exhibits 1 & 2) for a listing of ARB certified Phase I two-point and coaxial vapor recovery equipment.

See Executive Order G-70 series for ARB certified Phase II balance system vapor recovery equipment and components which may be used as an alternative to the equipment above.

See ARB approval letters #92-28, #92-21, #92-20 or contact the Air Resources Compliance Division for listings of ARB Certified PV valves.

Exhibit 2
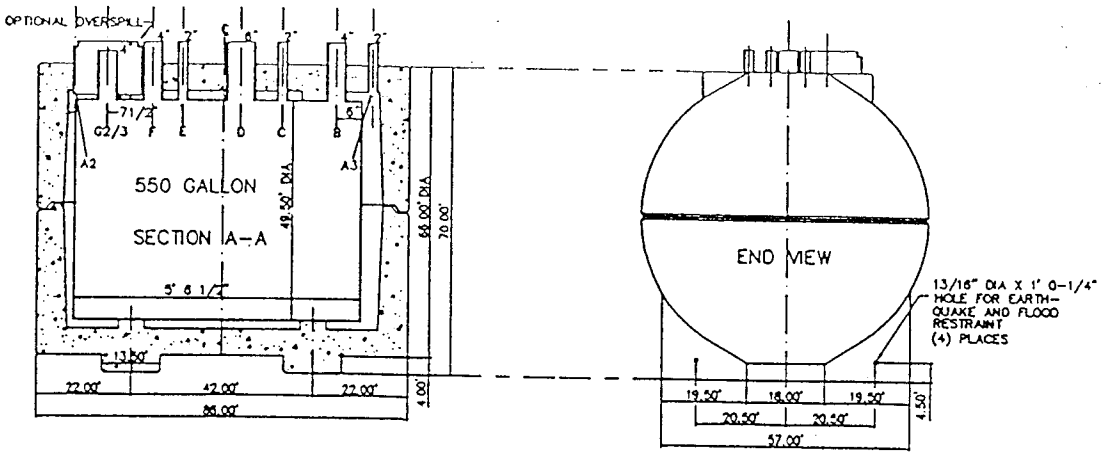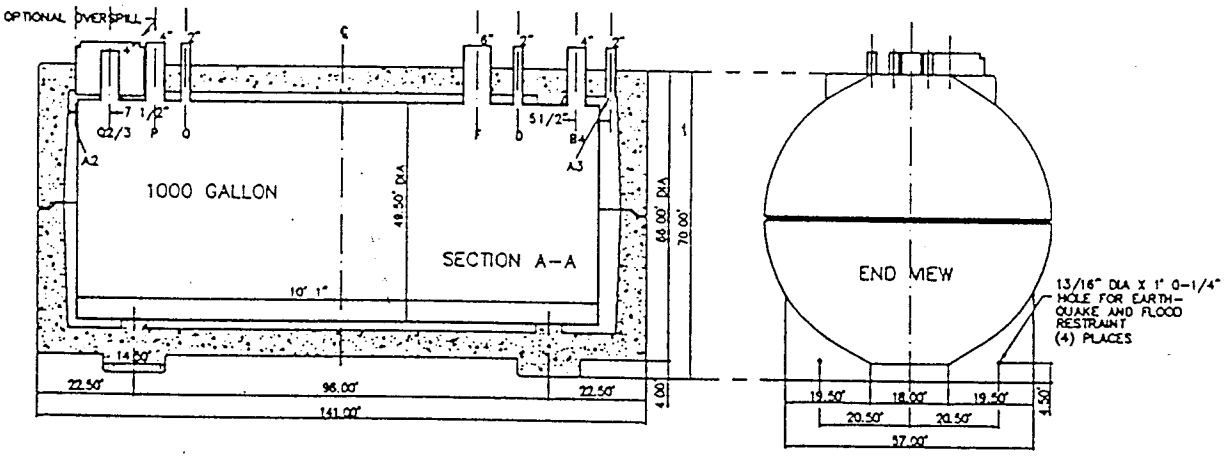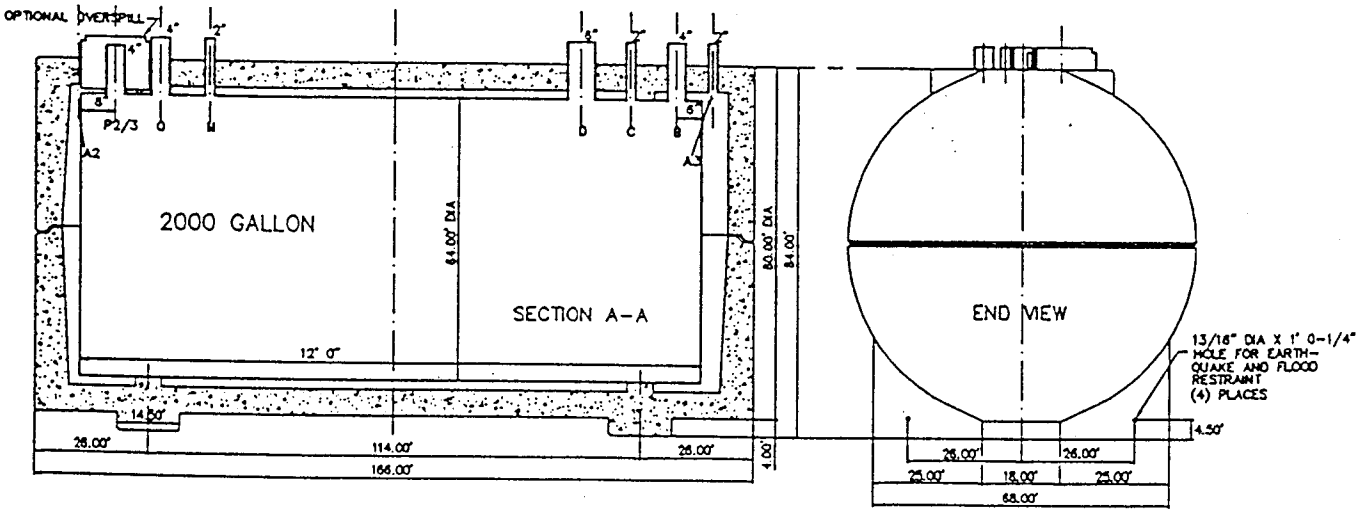
Executive Order G-70-157
RECoVAULT Incorporated Ecovault Above Ground Tank
Filling/Dispensing Vapor Recovery System