State of California
AIR RESOURCES BOARD

Executive Order G-70-158-A

Certification of San Luis Tank Piping Construction Co., Inc. *Firesafe* Aboveground Filling/Dispensing Vapor Recovery System

WHEREAS, the Air Resources Board (the "Board") has established, pursuant to California Health and Safety Code Sections 39600, 39601 and 41954, certification procedures for systems designed to control gasoline vapor emissions displaced during the filling of service station storage tanks ("Phase I vapor recovery systems") and for systems designed to control gasoline vapor emissions from motor vehicle fueling operations ("Phase II vapor recovery systems") in its "Certification Procedures for Gasoline Vapor Recovery Systems at Service Stations," amended December 4, 1981 (the "Certification Procedures"), and incorporated by reference in Title 17, California Code of Regulations, Section 94001;

WHEREAS, the Board has established, pursuant to California Health and Safety Code Sections 39600, 39601, and 41954, test procedures to determine compliance of Phase I and Phase II vapor recovery systems with emission standards in its "Test Procedures for Determining the Efficiency of Gasoline Vapor Recovery Systems at Service Stations," amended September 1, 1982 (the "Test Procedures"), incorporated by reference in Title 17, California Code of Regulations, Section 94000;

WHEREAS, San Luis Tank Piping Construction Co., Inc. has had a tank design previously certified for Phase I and Phase II vapor recovery. These tanks were constructed with a minimum of four inches of fibrous proprietary insulating material between the primary and secondary tank;

WHEREAS, San Luis Tank Piping Construction Co., Inc. has discontinued manufacturing the previously certified tanks using fibrous proprietary insulating material;

WHEREAS, San Luis Tank Piping Construction Co., Inc. has now designed and manufactures proprietary lightweight concrete insulated tanks;

WHEREAS, San Luis Tank Piping Construction Co., Inc. has applied for certification of its *Firesafe* proprietary lightweight concrete insulated aboveground gasoline storage tank vapor recovery system for use in balance Phase I and Phase II operations;

WHEREAS, the San Luis Tank Piping Construction Co., Inc. *Firesafe* vapor recovery system has been evaluated pursuant to the Certification Procedures and Test Procedures;

WHEREAS, Section VIII-A of the Certification Procedures provides that the Executive Officer shall issue an order of certification if he or she determines that a vapor recovery system conforms to all of the requirements set forth in Certification Procedures Sections I through VII; and

WHEREAS, on April 15, 1994 the Air Resources Board Executive Officer, pursuant to California Health and Safety Code sections 39515 and 39516, delegated to the Chief, Compliance Division full authority to approve and grant Executive Orders certifying integral Phase I and Phase II aboveground systems in accordance with California Health and Safety Code section 41954; and

WHEREAS, I, James J. Morgester, Chief of the Compliance Division of the California Air Resources Board, have determined that the San Luis Tank Piping Construction Co., Inc. *Firesafe* aboveground storage tank vapor recovery systems, when used with ARB Certified Phase I two-point balance vapor recovery components and Phase II balance vapor recovery components, conforms with all the requirements set forth in Sections I through VII of the Certification Procedures;

NOW, THEREFORE, IT IS HEREBY ORDERED that this certification applies to the San Luis Tank Piping Co., Inc. *Firesafe* aboveground gasoline storage tank vapor recovery systems. The systems certified by this order may be used on single product cylindrical tanks between 300 and 12,000 gallons total capacity which utilize the same geometric configuration and design as shown in Exhibits 1 and 2 (attached).

IT IS FURTHER ORDERED that any emergency vent installed on the tanks be leak free at the operating pressure of the tank when tested in accordance with ARB test methods, as specified in Title 17, California Code of Regulations.

IT IS FURTHER ORDERED that the use of Air Resources Board certified Phase I two-point balance system vapor recovery components and Phase II balance system vapor recovery components shall be a condition of the certification. Air Resources Board certified Phase I components are listed in Exhibits 1 through 3 of Executive Order G-70-97-A, Exhibits 1 and 2 of Executive Order G-70-102-A, or Exhibits 1 and 2 of Executive Order G-70-142-A. Air Resources Board certified balance system Phase II components are listed in Executive Order G-70-52-AM and other G-70 series.

IT IS FURTHER ORDERED that the Phase I two-point balance system components and piping configuration used to connect the cargo truck bulk delivery line and vapor return line to the storage tank fill line and vapor recovery line shall be consistent with Air Resources Board Executive Order G-70-97 series, G-70-102 series or Executive Order G-70-142 series and that any liquid leak upon disconnecting the delivery line shall be no more than 10 ml per disconnect computed from the average of three disconnect operations.

IT IS FURTHER ORDERED that in order to prevent spitback or condensate from blocking the vapor path between the vehicle fill pipe and the storage tank headspace, the routing of the coaxial hose shall be consistent with the configurations shown in exhibits 4 through 11a in Air Resources

Board Executive Order G-70-52-AM, with the exception that the highest point in the vapor return path must be above the top of the storage tank and there shall be no liquid trap in the vapor path between the highest point in the vapor return path and the storage tank vapor headspace during fuel dispensing. Furthermore, there shall be no liquid trap in the vapor path between the vehicle fill pipe and the highest point in the vapor return path during fuel dispensing unless the coaxial hose is equipped with a liquid removal system with the liquid pickup located at the liquid trap.

IT IS FURTHER ORDERED that an Air Resource Board certified P/V valve shall be installed on the tank vent and that the valve have a rated pressure relief setting of no more than 2.5 inches of water column gage. The installed P/V valve shall extend to a minimum height of 12 feet above grade.

IT IS FURTHER ORDERED that a minimum of 6.0 inches of proprietary lightweight concrete be installed between the interior holding tank and the exterior containment tank for all storage tanks as shown in Exhibits 1 and 2

IT IS FURTHER ORDERED that the general exterior of the storage tanks be painted white.

IT IS FURTHER ORDERED that compliance with the rules and regulations of the local air pollution control district with jurisdiction over the location where the system is installed, shall be made a condition of this certification.

IT IS FURTHER ORDERED that when bulk deliveries are being made by a cargo truck, rather than a bobtail truck, the truck pumping system be operated at a steady rate to limit the amount of vapor growth associated with a varied pumping rate. When clearing fuel from the pumping system, following fuel delivery, the operator shall likewise maintain a steady pumping rate.

IT IS FURTHER ORDERED that prior to using any San Luis Tank Piping Construction Co., Inc. *Firesafe* aboveground tank for storage of gasoline the complete vapor recovery system will be leak checked at 150 percent of the maximum working pressure of the tank (P/V valve setting), or 5 inches of water column pressure, whichever is greater, and verified to be vapor tight. Thereafter, the complete system shall be checked once a year to ensure a vapor tight system and proper operation of the vapor recovery system. Leak checks shall be conducted in accordance with ARB test methods, as specified in Title 17, California Code of Regulations.

IT IS FURTHER ORDERED that the tank and associated piping and other equipment not specifically listed as approved Phase I equipment in Exhibits 1 through 3 of Executive Order G-70-97-A, Executive Order G-70-102 series or G-70-142 series nor specifically listed as approved Phase II equipment in Executive Order G-70 series shall comply with the rules and regulations of the local fire officials with jurisdiction over the location where the system is installed.

IT IS FURTHER ORDERED that compliance with all applicable certification requirements and rules and regulations of the Division of Measurement Standards, the Office of the State Fire Marshal, and the Division of Occupational Safety and Health of the Department of Industrial Relations shall be made a condition of this certification.

IT IS FURTHER ORDERED that any alteration of the equipment, parts, design, or operation of the configurations certified hereby, is prohibited, and deemed inconsistent with this certification, unless such alteration has been approved by the Executive Officer or his or her designee.

IT IS FURTHER ORDERED that this Executive Order shall supersede Executive Order G-70-158 dated March 24, 1994.

Executed this 24th day of March 1995 at Sacramento, California.

James J. Morgester, Chief
Compliance Division

Exhibit 1

Executive Order G-70-158-A

San Luis Tank Piping Construction Co., Inc.
Firesafe Aboveground Gasoline Vault
Filling/Dispensing Vapor Recovery System

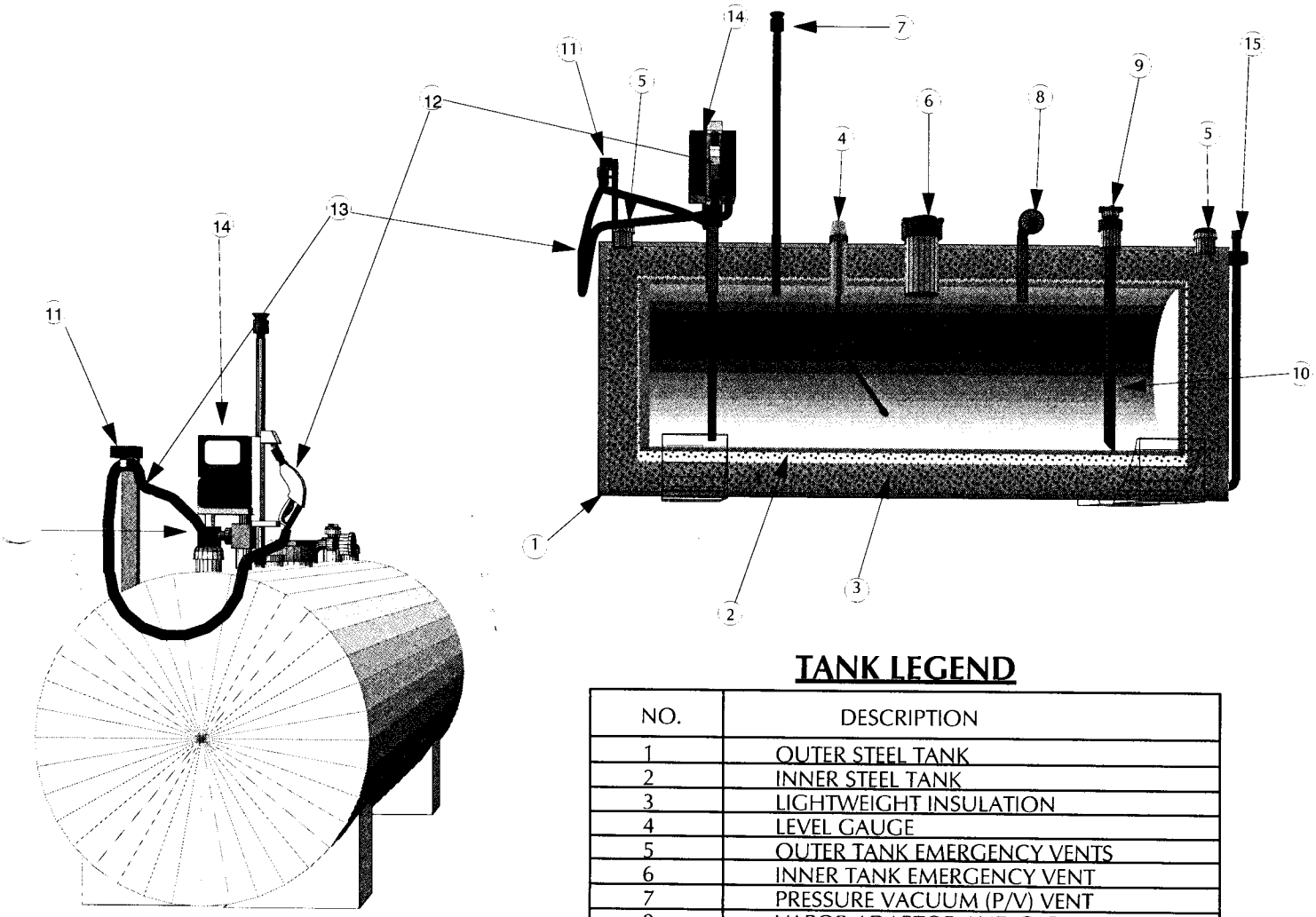

TANK LEGEND

NO.	DESCRIPTION
1	OUTER STEEL TANK
2	INNER STEEL TANK
3	LIGHTWEIGHT INSULATION
4	LEVEL GAUGE
5	OUTER TANK EMERGENCY VENTS
6	INNER TANK EMERGENCY VENT
7	PRESSURE VACUUM (P/V) VENT
8	VAPOR ADAPTOR AND CAP
9	FILL ADAPTOR AND CAP
10	SUBMERGED FILL TUBE
11	HOSE RETRACTOR
12	NOZZLE
13	COAXIAL HOSE
14	PUMP
15	OUTER TANK MONITORING ACCESS
16	COAXIAL HOSE ADAPTOR

Notes:

On tanks larger than 2000 gallons, the nozzle and dispensing meter will be attached to the end of the tank, and the pump will remain as shown.

The tank vent line shall extend to a minimum height of 12 feet above grade.

Tanks must be constructed with a minimum of six inches of proprietary lightweight concrete insulating material between the primary tank and the outer liner.

Exhibit 2

Executive Order G-70-158-A

San Luis Tank Piping Construction Co., Inc
Firesafe Aboveground Tank
Filling/Dispensing Vapor Recovery System

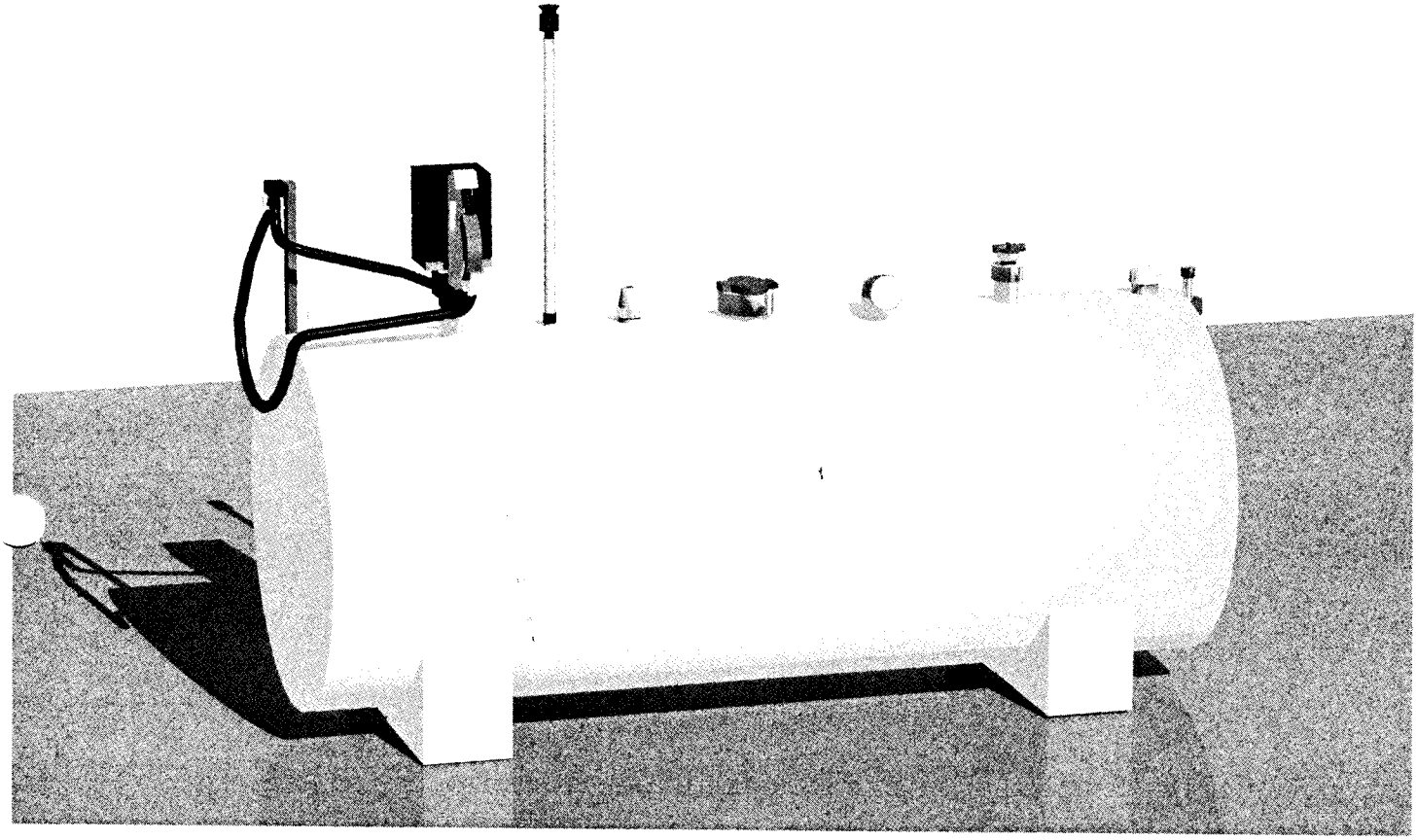

Tank Dimensions

NOMINAL CAPACITY (GAL.)	OVERALL HEIGHT (IN.)	OVERALL WIDTH (IN.)	OVERALL LENGTH (IN.)
300	56.5	46.5	91
500	56.5	46.5	144
1,000	79	69	108
1,500	79	69	155
2,000	79	69	198
3,000	79	69	298
3,000	102	92	156
4,000	102	92	202
5,000	102	92	250
6,000	102	92	298
6,000	114	104	226
8,000	102	92	394
8,000	114	104	298
10,000	102	92	488
10,000	114	104	370
12,000	114	104	442
12,000	126	116	348