State of California
AIR RESOURCES BOARD

Executive Order G-70-160

Certification of Above Ground Tank Vault
Aboveground Tank Filling/Dispensing Vapor Recovery System

WHEREAS, the Air Resources Board (the "Board") has established, pursuant to California Health and Safety Code Sections 39600, 39601 and 41954, certification procedures for systems designed to control gasoline vapor emissions displaced during the filling of service station storage tanks ("Phase I vapor recovery systems") and for systems designed to control gasoline vapor emissions from motor vehicle fueling operations ("Phase II vapor recovery systems") in its "Certification Procedures for Gasoline Vapor Recovery Systems at Service Stations", amended December 4, 1981 (the "Certification Procedures"), and incorporated by reference in Title 17, California Code of Regulations, Section 94001;

WHEREAS, the Board has established, pursuant to California Health and Safety Code Sections 39600, 39601, and 41954, test procedures to determine compliance of Phase I and Phase II vapor recovery systems with emission standards in its "Test Procedures for Determining the Efficiency of Gasoline Vapor Recovery Systems at Service Stations", amended September 1, 1982 (the "Test Procedures"), incorporated by reference in Title 17, California Code of Regulations, Section 94000;

WHEREAS, the tanks manufactured by Above Ground Tank Vault were previously certified by Executive Order G-70-144-B granted to Crisp Construction;

WHEREAS, the company known as Crisp Construction was divided into different divisions and Above Ground Tank Vault was established as a separate company;

WHEREAS, Above Ground Tank Vault has applied to have the certification of its aboveground tank system listed under its own name;

WHEREAS, Section VIII-A of the Certification Procedures provides that the Executive Officer shall issue an order of certification if he or she determines that a vapor recovery system conforms to all of the requirements set forth in Certification Procedures Sections I through VII; and

WHEREAS, on April 15, 1994 the Air Resources Board Executive Officer, pursuant to California Health and Safety Code sections 39515 and 39516, delegated to the Chief, Compliance Division full authority to approve and grant Executive Orders certifying integral Phase I and Phase II aboveground systems in accordance with California Health and Safety Code section 41954; and

WHEREAS, I, James J. Morgester, Chief of the Compliance Division of the California Air Resources Board, have determined that the Above Ground Tank Vault aboveground storage tank vapor recovery systems for single and split product tanks, when used with ARB Certified Phase I and Phase II balance vapor recovery components, conforms with all the requirements set forth in Sections I through VII of the Certification Procedures;

NOW, THEREFORE, IT IS HEREBY ORDERED that this certification applies to the Above Ground Tank Vault aboveground gasoline storage tank vapor recovery systems. The systems certified by this order may be used on single or split product cylindrical or rectangular tanks between 250 and 12,000 gallons total capacity which utilize the same geometric configurations and designs as shown in Exhibit 1 and Exhibit 2, attached.

IT IS FURTHER ORDERED that any emergency vent installed on the tanks be leak free at the operating pressure of the tank when tested in accordance with ARB Method 2-6, "Test Procedures for Gasoline Vapor Leak Detection Using Combustible Gas Detector" as last amended September 1, 1982 (the "Test Procedures"), incorporated by reference in Section 94007 of Title 17, California Code of Regulations.

IT IS FURTHER ORDERED that the use of Air Resources Board certified Phase I and Phase II vapor recovery components shall be a condition of the certification. Air Resources Board certified Phase I components are listed in Exhibits 1 through 3 of Executive Order G-70-97-A, Exhibits 1 and 2 of Executive Order G-70-102-A, or Exhibits 1 and 2 of Executive Order G-70-142-A. Air Resources Board certified balance system Phase II components are listed in the Executive Order G-70 series.

IT IS FURTHER ORDERED that the Phase I components and piping configuration used to connect the cargo truck bulk delivery line and vapor return line to the storage tank fill line and vapor recovery line shall be consistent with Air Resources Board Executive Order G-70-97 series, G-70-102 series or Executive Order G-70-142 series and that any liquid leak upon disconnecting the delivery line shall be no more than 10 ml per disconnect computed from the average of three disconnect operations.

IT IS FURTHER ORDERED that in order to prevent spitback or condensate from blocking the vapor path between the vehicle fill pipe and the storage tank headspace, the routing of the coaxial hose shall be consistent with the configurations shown in exhibits 4 through 11a in Air Resources Board Executive Order G-70-52-AM, with the exception that the highest point in the vapor return path must be above the the top of the storage tank and there shall be no liquid trap in the vapor path between the highest point in the vapor return path and the storage tank vapor headspace during fuel dispensing. Furthermore, there shall be no liquid trap in the vapor path between the vehicle fill pipe and the highest point in the vapor return path during fuel dispensing unless the coaxial hose is equipped with a liquid removal system with the liquid pickup located at the liquid trap.

IT IS FURTHER ORDERED that an Air Resource Board certified P/V valve shall be installed on the tank vent and that the valve have a rated pressure relief setting of no less then 2.5 inches of water column gage. The installed P/V valve shall extend to a minimum height of 12 feet above grade.

IT IS FURTHER ORDERED that a minimum of 4 inches of proprietary insulating material be installed between the inner holding tank and exterior containment tank of all storage tanks as shown in Exhibits 1 and 2.

IT IS FURTHER ORDERED that the general exterior of the storage tanks be painted white.

IT IS FURTHER ORDERED that compliance with the rules and regulations of the local air pollution control district with jurisdiction over the location where the system is installed, shall be made a condition of this certification.

IT IS FURTHER ORDERED that when bulk deliveries are being made by a cargo truck, rather than a bobtail truck, the truck pumping system be operated at a steady rate to limit the amount of vapor growth associated with a varied pumping rate. When clearing fuel from the pumping system, following fuel delivery, the operator shall likewise maintain a steady pumping rate.

IT IS FURTHER ORDERED that prior to using any Above Ground Tank Vault aboveground tank for storage of gasoline the complete vapor recovery system will be leak checked at 150 percent of the maximum working pressure of the tank (P/V valve setting), or 5 inches of water column pressure, whichever is greater, and verified to be vapor tight. Thereafter, the complete system shall be checked once a year to ensure a vapor tight system and proper operation of the vapor recovery system. Leak checks shall be conducted in accordance with Section 1 of the Test Procedures.

IT IS FURTHER ORDERED that the tank and associated piping and other equipment not specifically listed as approved Phase I equipment in Exhibits 1 through 3 of Executive Order G-70-97-A, Executive Order G-70-102 series or G-70-142 series nor specifically listed as approved Phase II equipment in Executive Order G-70 series shall comply with the rules and regulations of the local fire officials with jurisdiction over the location where the system is installed.

IT IS FURTHER ORDERED that compliance with all applicable certification requirements and rules and regulations of the Division of Measurement Standards, the Office of the State Fire Marshal, and the Division of Occupational Safety and Health of the Department of Industrial Relations shall be made a condition of this certification.

IT IS FURTHER ORDERED that any alteration of the equipment, parts, design, or operation of the configurations certified hereby, is prohibited, and deemed inconsistent with this certification, unless such alteration has been approved by the Executive Officer or his or her designee.

IT IS FURTHER ORDERED that this Executive Order shall supersede Executive Order G-70-144-B dated June 7, 1994.

Executed this 9TH day of November 1994 at Sacramento, California.

James J. Morgester, Chief
Compliance Division

Exhibit 1

Executive Order G-70-160

Above Ground Tank Vault Aboveground Gasoline
Tank Filling/Dispensing Vapor Recovery System

<u>Cylindrical Tank System Design</u>

	A	B	C	D	E
250 gallons	24"	30"	72"	43"	54"
350 gallons	24"	42"	60"	54"	45"
520 gallons	24"	42"	84"	54"	63"
1,000 gallons	24"	42"	13'	54"	138"
1,500 gallons	24"	52"	13'	64"	138"
2,000 gallons	24"	63"	12'	75.5"	126"
2,500 gallons	24"	63"	14'	75.5"	150"
3,000 gallons	24"	63"	17'	75.5"	186"
4,000 gallons	24"	63"	23'	75.5"	258"
5,000 gallons	24"	83"	17'	95"	186"
6,000 gallons	24"	83"	20'	95"	222"
7,500 gallons	24"	83"	25'	95"	282"
8,000 gallons	24"	83"	27'	95"	306"
10,000 gallons	24"	83"	33'	95"	378"
12,000 gallons	24"	91"	34'	103"	390"

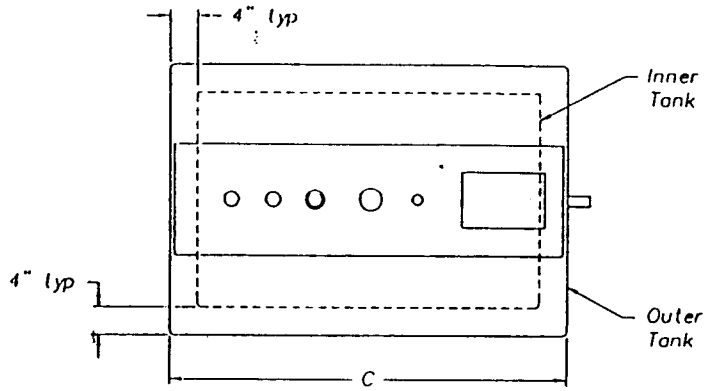

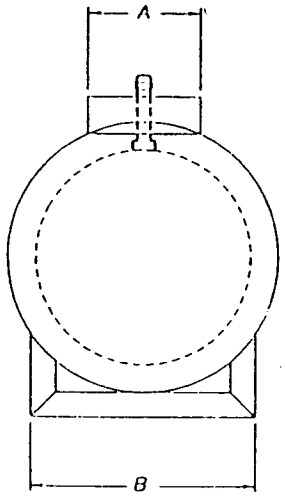

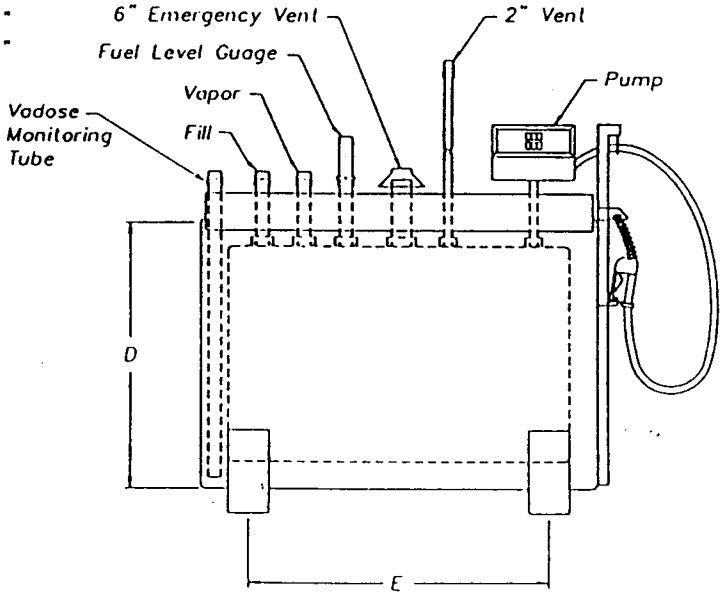

Notes:

A minimum of 4 inches of proprietary insulating material between the interior holding tank and the exterior containment tank.

The tank vent line shall extend to a minimum height of 12 feet above grade.

Exhibit 2

Executive Order G-70-160

Above Ground Tank Vault Aboveground Gasoline Tank Filling/Dispensing Vapor Recovery System

Rectangular Tank System Design

	A	B	C	D
250 gallons	38"	44"	56"	52"
500 gallons	38"	44"	104"	52"
1,000 gallons	80"	86"	80"	54"
2,000 gallons	80"	86"	152"	54"
4,000 gallons	83"	89"	201"	74"
5,000 gallons	83"	89"	249"	74"
6,000 gallons	84"	90"	249"	86"
8,000 gallons	84"	90"	328"	86"
10,000 gallons	88"	94"	369"	90"
12,000 gallons	90"	96"	428"	92"

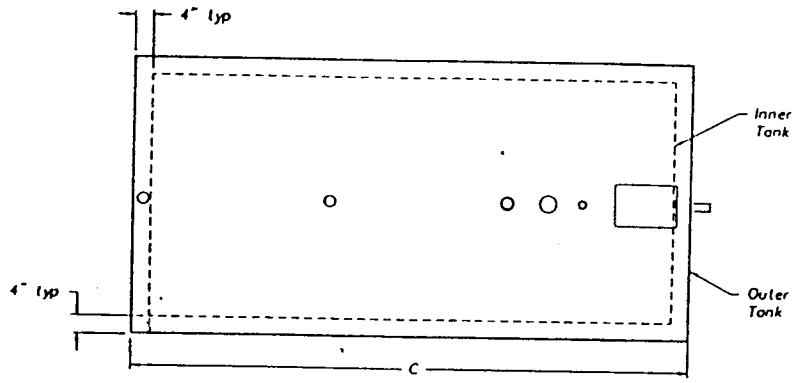

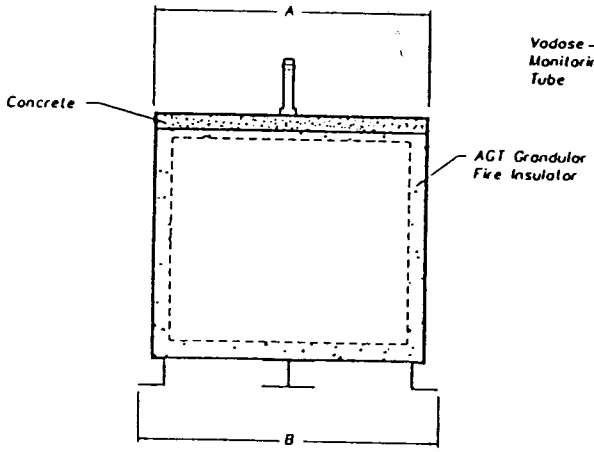

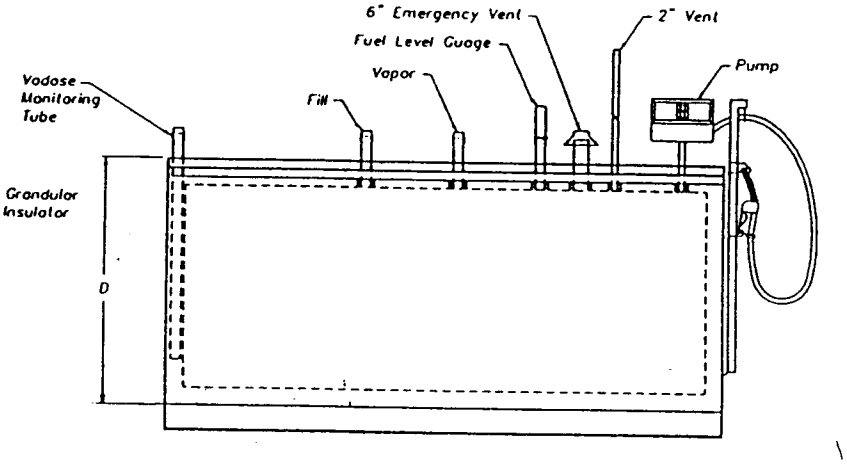

Notes:

A minimum of 4 inches of proprietary insulating material between the interior holding tank and the exterior containment tank.

The tank vent line shall extend to a minimum height of 12 feet above grade.