Cal/EPA
California Environmental Protection Agency

Air Resources Board
P.O. Box 2815
2020 L Street
Sacramento, CA
95812-2815

September 9, 1996

Pete Wilson
Governor

James M. Strock
Secretary for Environmental Protection

Jon Young, President
Hasstech Incorporated
6985 Flanders Drive
San Diego, California 92121

#96-26

Dear Mr. Young:

Approval of the Hasstech Compact Out-Of-Tank Drain Check Valve

You requested California Air Resources Board (CARB) certification of the Hasstech model number 1042A compact out-of-tank drain check valve. This component, illustrated in the attached drawing, is a smaller version of the currently approved model 1042 drain check valve. The model 1042A compact out-of-tank drain check valve may be installed in the vapor path inside dispensers with an overhead vapor return plumbing configuration, or with below ground vapor return piping. These one way valves are designed, in certain instances, to allow accumulated liquid from the low point of vapor return lines to drain into the underground storage tanks (USTs).

While dispensing is occurring with at least one fueling point, and the collection unit is operating, the out-of-tank drain check valves remain closed to prevent the escape of vapors from the storage tanks. Liquid drawn in with the recovered vapor, along with any condensate in the return lines, collects at the check valve. When none of the fueling points are in use, and the collection unit is idle, the out-of-tank drain check valves open to permit the flow of accumulated liquid to the USTs. The plumbing configuration of these check valves include a U-trap which provides a liquid seal to prevent the escape of vapors while the valve is open.

As required by CARB certification procedures, the necessary approvals from the Office of the State Fire Marshal and the Division of Occupational Safety and Health have been obtained. I find that the use of the 1042A compact out-of-tank drain check valve, when properly installed, will not adversely affect the performance of the vapor recovery system. .Therefore, the Hasstech model 1042A compact out-of-tank drain check valve is certified for use with the CARB approved Hasstech VCP-3A vacuum assist Phase II vapor recovery system (Executive Order G-70-164).

If you have any questions or need further assistance, please contact Ranjit Bhullar at (916) 323-7370 or Laura Mckinney at (916) 327-1525.

Sincerely,

James J. Morgester, Chief
Compliance Division

Attachment

cc w/attachment:
Mr. Jim Johnston, Chairman
CAPCOA Vapor Recovery Committee
Monterey Bay Unified APCD

Mr. Gary Hunter, Manager
CARB Compliance Assistance Section

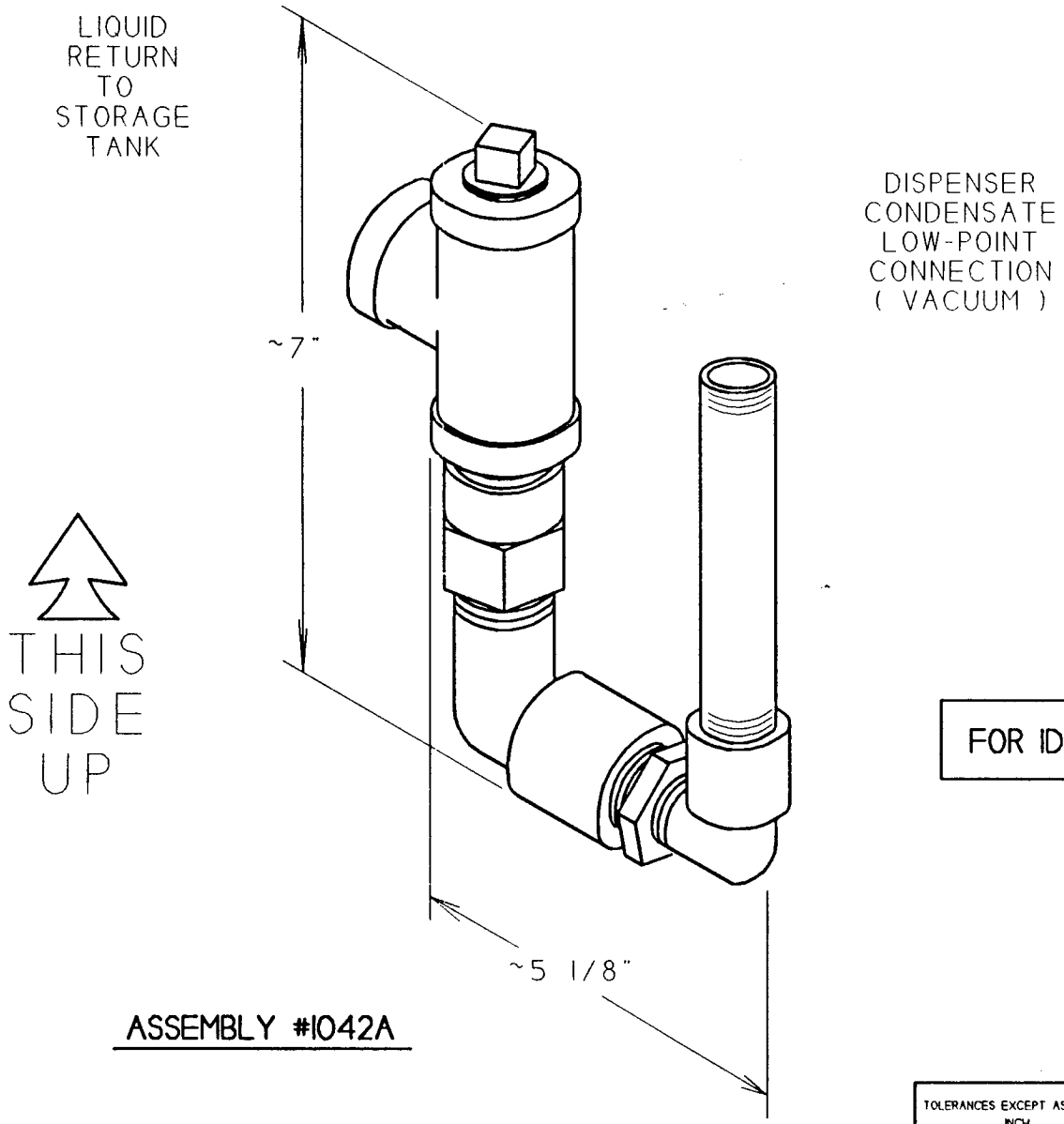

ASSEMBLY #1042A

FOR IDENTIFICATION PURPOSES ONLY!

TOLERANCES EXCEPT AS NOTED INCH .X ± .02 .XX ± .010 .XXX ± .005 0 FRACTIONAL ± 1/16 ANGLE ± 30 MINUTES	HASSTECH, INC. SAN DIEGO, CALIFORNIA				PART NO. 11-1016X	
	PART NAME DRAIN CHECK, COMPACT SUMP					
	REV. 0	DESIGNED BY CO.	DRAWN BY GWH	DATE 09/04/96	SIZE A	SCALE NONE