State of California

AIR RESOURCES BOARD

Executive Order G-70-14-E

Relating to the Modification of the Certification of the
Red Jacket Aspirator Assist Service Station
Phase II Vapor Recovery System

Pursuant to the authority vested in the Air Resources Board (ARB) by Health and Safety Code Section 41954; and

Pursuant to the authority vested in the undersigned by Health and Safety Code Sections 39515 and 39516;

IT IS ORDERED AND RESOLVED: That the certification issued on May 16, 1979, for the Red Jacket aspirator assist, Phase II vapor collection and disposal system licensed to and marketed by Wylain, Incorporated, Red Jacket Pumps Division, is hereby modified to allow use of the Dresser Wayne Decade Marketer overhead hose configuration without anti-recirculation valve, as an alternate hose configuration. The system hereby modified is certified to be at least 95 percent effective with manifolded vents for attendant/self serve use and at least 90 percent effective with nonmanifolded vents for attendant/self serve use at gasoline service stations in conjunction with Phase I vapor recovery systems which have been certified by the Air Resources Board. The system is described in Exhibits 1, 2, 3, 4, and 5 attached hereto.

IT IS FURTHER ORDERED AND RESOLVED: That compliance with the applicable certification requirements and rules and regulations of the Division of Measurement Standards, the State Fire Marshal's Office, and the Division of Industrial Safety of the Department of Industrial Relations is made a condition of this certification.

IT IS FURTHER ORDERED AND RESOLVED: That the system certified hereby shall perform in actual use with the same effectiveness as the certification test system. Compliance with the applicable performance criterion shall be a condition of this certification, and failure to meet this criterion shall constitute grounds for revocation, suspension, or modification of this certification.

IT IS FURTHER ORDERED AND RESOLVED: That any alteration to the equipment, parts, design, or operation of the system certified hereby, is prohibited, and deemed inconsistent with this certification, unless such alteration has been approved by the undersigned.

IT IS FURTHER ORDERED AND RESOLVED: That the OPW-7VE nozzles shall be 100 percent performance checked at the factory including checks of proper functioning of all automatic shut-off mechanisms.

IT IS FURTHER ORDERED AND RESOLVED: That during installation of the OPW-7VE nozzles they shall be performance tested for ability to dispense gasoline without difficulty in the presence of the station manager or other responsible individual. The station manager, owner or operator shall also be provided with instructions on the proper use of the nozzles, their repair and maintenance, and where nozzle replacements and nozzle components can be readily obtained. A copy of the nozzle warranty shall be made available to the station manager, owner or operator.

IT IS FURTHER ORDERED AND RESOLVED: That except for those non-retail outlets refueling special vehicles, in order for vapor return hoses longer than specified in this certification to be used, the system shall incorporate a liquid blockage detector which is acceptable to the undersigned.

Executed at Sacramento, California, this 4th day of March, 1980.

Thomas C. Austin
Executive Officer

EXHIBIT 1

Executive Order G-70-14-E

Red Jacket Aspirator Assist Service Station
Phase II Vapor Recovery System

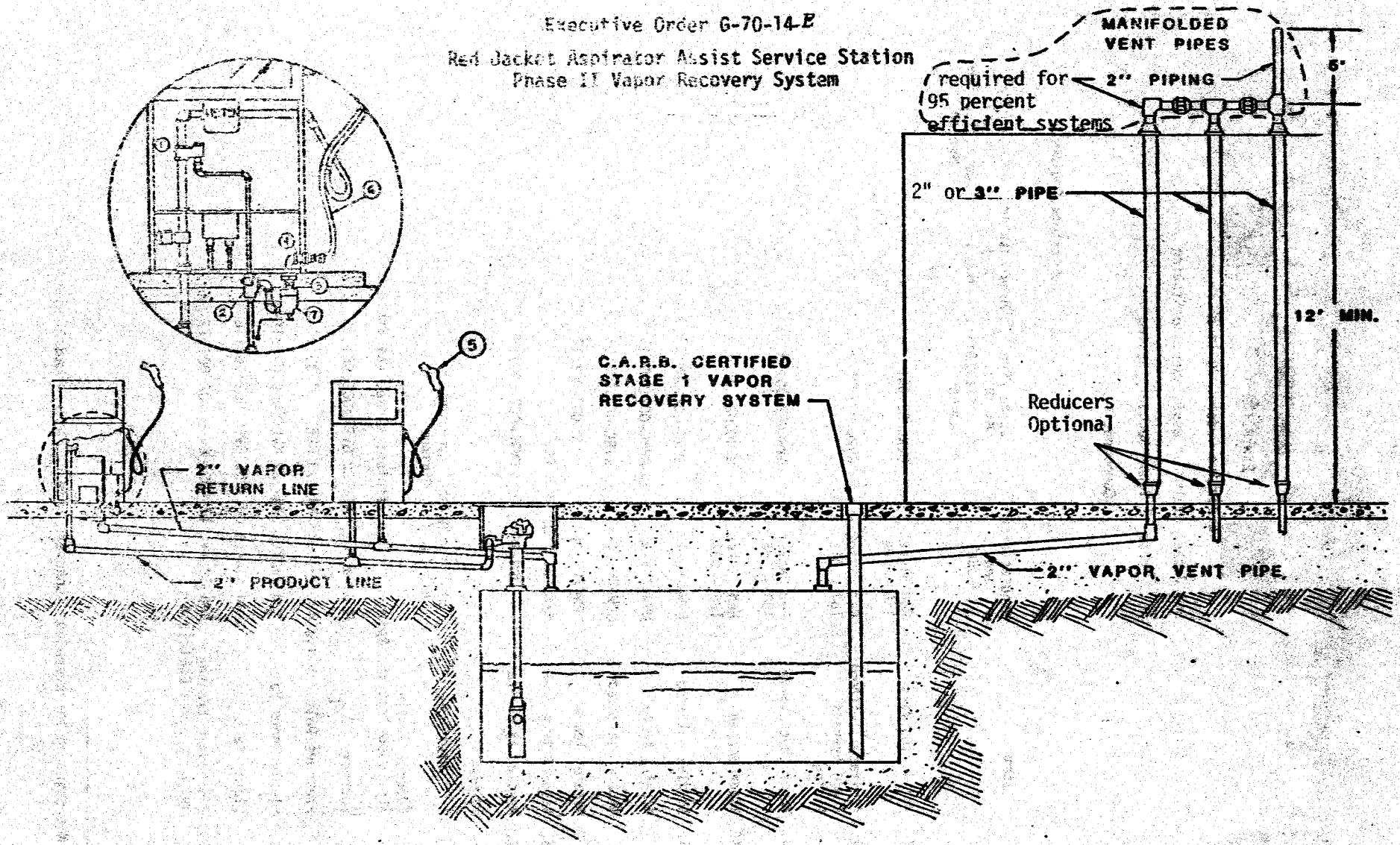

EXHIBIT 2

Executive Order G-70-14-E

Red Jacket Aspirator Assist Service Station

Phase II Vapor Recovery System

Component List

Item	Manufacturer and Model	State Fire Marshal Identification Number	Substitute Equipment: Manufacturer and Model	Substitute Equipment: State Fire Marshal Identification Number
1. Modulating Valve	Red Jacket 188 - 185	GVRC002:001:1		
2. Aspirator, without fluid by-pass tubing	Red Jacket 104 - 016	GVRC002:001:2		
3. Vapor Check Valve	Red Jacket 188 - 184	GVRC002:001:3		
4. Vapor Screen	Red Jacket 176 - 032	GVRC002:001:4		
5. Nozzle, unleaded	OPW-7VE-49	GVRC-002:008:17		
Nozzle, leaded	OPW-7VE-36	GVRC-002:008:15		
Nozzle, unleaded	OPW-7VE-47	GVRC-002:008:16		
Nozzle, leaded	OPW-7VE-34	GVRC-002:008:14		
6. Vapor Return Hose	5/8 in. I.D. by 8 ft.			
7. Recirculation Trap*	OPW-78*	GVRC-002:008:12*		
8. Swivels				
Vapor Hose	State Fire Marshal Approved. 0.495 in. I.D. Minimum			
9. Eductor System (For vapor return piping with insufficient slope, see Exhibit 3.)				
Eductor	Red Jacket 141-182	GVRC:002:001:13		
Pressure Relief Valve	Red Jacket 144-073	GVRC:002:001:14		
Liquid Check Valve	Red Jacket 088-129	GVRC:002:001:15		
Liquid Tank	Red Jacket 081-055	GVRC:002:001:16		
10. Overhead Retractor (Optional, see Exhibit 4)	Red Jacket 171-057	GVRC:002:001:17		

*Not required for overhead dispensers, see Exhibits 4 *and* 5.

Exhibit 3

Executive Order G-70-14-*E*

Red Jacket Aspirator Assist Service Station
Phase II Vapor Recovery System

Uphill Eductor System Installation
(for vapor return lines with less than 1/8 inch per foot down slope from dispenser to product tank)

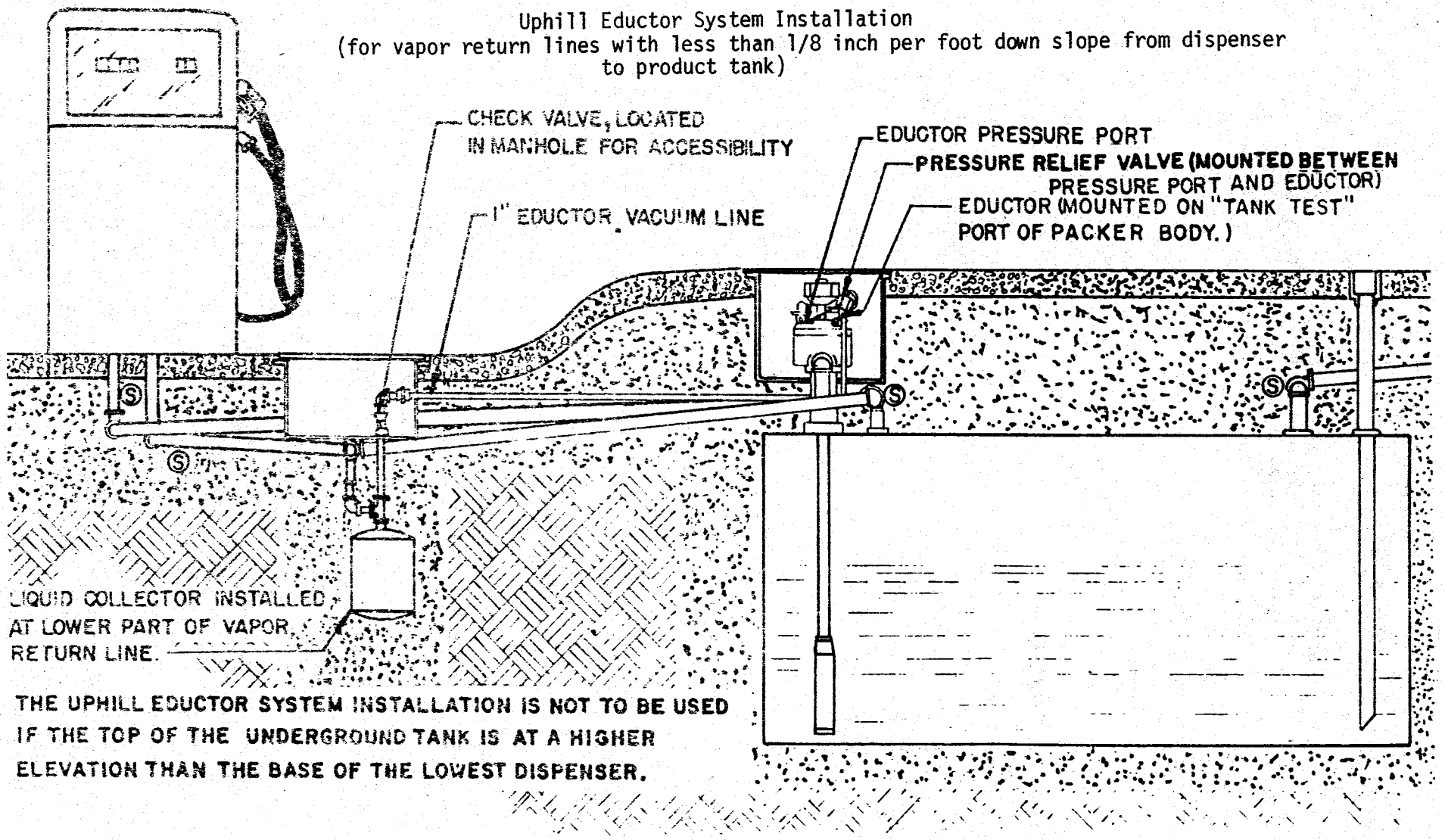

THE UPHILL EDUCTOR SYSTEM INSTALLATION IS NOT TO BE USED IF THE TOP OF THE UNDERGROUND TANK IS AT A HIGHER ELEVATION THAN THE BASE OF THE LOWEST DISPENSER.

Exhibit 4
Executive Order G-70-14-*E*

Red Jacket Aspirator Assist Service Station
Phase II Vapor Recovery System
Alternate Dispenser Configuration
Red Jacket Overhead Hose Retractor System

FLUID HOSE LENGTH:	12 Feet
VAPOR HOSE LENGTH:	As needed to permit natural drainage into dispenser and still avoid kinking when fully extended
VAPOR HOSE DIAMETER:	5/8" inside diameter.
RETRACTOR REEL:	Ametek, Aero-Motive, Searle, or approved equivalent. State Fire Marshal Identification Number GVRC:002:001:17
CABLE LENGTH:	10 Feet
RECIRCULATION TRAP:	None
SWIVELS:	360° in-line on each end of both fluid and vapor hose. State Fire Marshal Approved 0.495 in. I.D. minimum.

INSTALLATION DIMENSIONS:

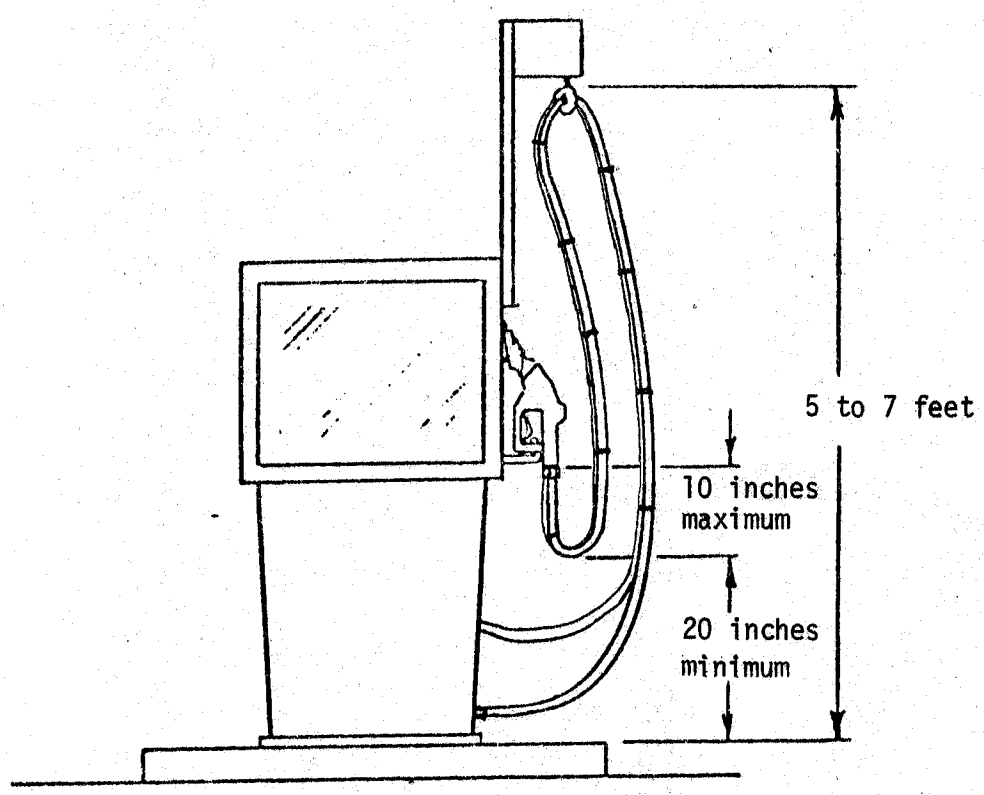

Exhibit 5 (Corrected 4-1-80)
Executive Order G-70-14-E

Red Jacket Aspirator Assist Service Station
Phase II Vapor Recovery System
Alternate Hose Configuration

Dresser Wayne Decade Marketer

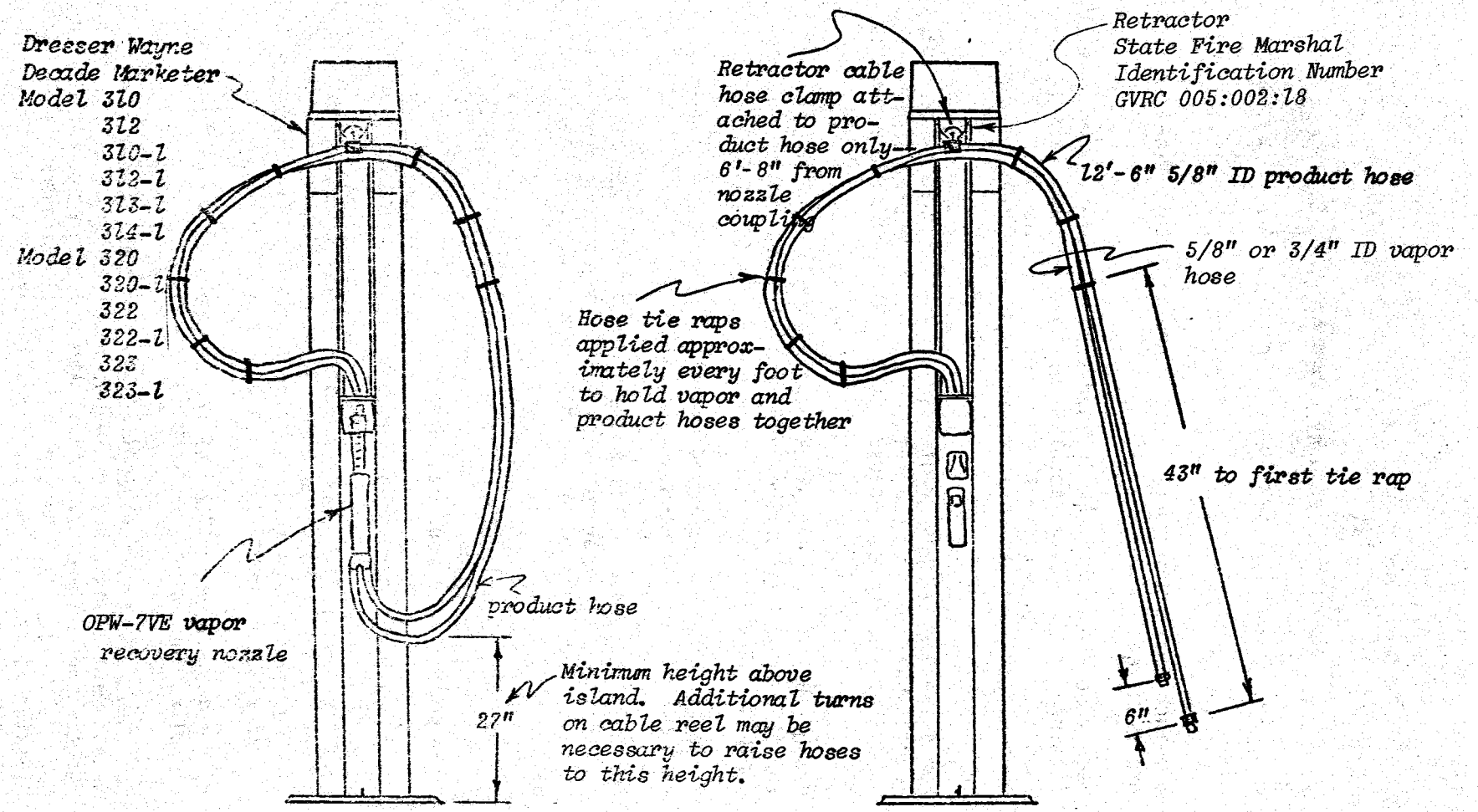

Notes: 1. Recirculation trap not required.
2. Hose swivels not required at dispenser end of hoses.

Notes to Accompany Exhibits 1, 2, 3, 4, *and 5*

Executive Order G-70-14-*E*

1. One-inch or larger branch lines connecting to a two-inch return pipe are required.

2. Each vapor hose shall be located such that the center line of the hose fitting, at the swivel mounting at the dispenser housing, is not more than 3-1/2 inches above the top surface of the island, and is as close to the surface of the island as possible. (Does not apply to Exhibit*s* 4 *and 5.)*

3. For dispenser islands greater than 5 feet in width, each vapor hose length shall not be longer than the sum of one-half the dispenser island width, in feet, plus 6 feet. (Does not apply to Exhibit*s* 4 *and 5.)*

4. Product hose length shall be selected for each dispenser to provide for full extension of the vapor return hose. (Does not apply to Exhibit*s* 4 *and 5.)*

5. State Fire Marshal approved swivels (and offsets if necessary) for this system shall be selected and installed on hoses to prevent hose kinking.

6. For only those non-retail outlets which fuel special vehicles, the installation of vapor recovery hoses longer than ~~eight-feet~~ *specified in this certification* are allowed provided the following conditions are met:

   a. The non-retail outlet fuels special vehicles such as large trucks, large skip loaders, off-the-road equipment, etc. where reaching the fill pipe requires longer hoses.

   b. The vapor return hose length is no longer than required.

   c. The vapor return hoses are arranged to be self-draining or provisions are made to drain the hoses after each refueling or the system incorporates an approved liquid blockage detection system arranged to cease dispensing when a blockage occurs.

   d. The Executive Officer of the Air Resources Board has approved the plans for compliance with conditions b and c.

7. For those dispensers classified as non-commercial by the Division of Measurement Standards and are not required to be tested and sealed by Weights and Measures officials, the use of recirculation traps is optional. However, the use of recirculation traps is recommended by the Division of Measurement Standards in any installation where the user utilizes the gallonage figures.