State of California
AIR RESOURCES BOARD

Executive Order G-70-153

Certification of the Dresser/Wayne WayneVac Phase II Vapor Recovery System

WHEREAS, the California Air Resources Board ("the Board" or "CARB") has established, pursuant to Sections 39600, 39601 and 41954 of the Health and Safety Code, certification procedures for systems designed for the control of gasoline vapor emissions during motor vehicle fueling operations ("Phase II vapor recovery systems") in its "Certification Procedures for Gasoline Vapor Recovery Systems at Service Stations" as last amended December 4, 1981 (the "Certification Procedures"), incorporated by reference in Section 94001 of Title 17, California Code of Regulations; and

WHEREAS, the Board has established, pursuant to Sections 39600, 39601 and 41954 of the Health and Safety Code, test procedures for determining the compliance of Phase II vapor recovery systems with emission standards in its "Test Procedures for Determining the Efficiency of Gasoline Vapor Recovery Systems at Service Stations" as last amended September 1, 1982 (the "Test Procedures"), incorporated by reference in Section 94000 of Title 17, California Code of Regulations; and

WHEREAS, Dresser Industries, Wayne Division ("Wayne"), has requested certification of the WayneVac Phase II vapor recovery system ("WayneVac system") pursuant to the Certification Procedures and Test Procedures; and

WHEREAS, the WayneVac system has been evaluated pursuant to the Board's Certification Procedures, and

WHEREAS, Section VIII-A of the Certification Procedures provides that the Executive Officer shall issue an order of certification if he or she determines that the vapor recovery system conforms to all of the requirements set forth in Sections I through VII of the Certification Procedures; and

WHEREAS, I find that the WayneVac system conforms with all the requirements set forth in Sections I through VII of the Certification Procedures, and results in a vapor recovery system which is at least 95 percent effective for attendant and/or self-serve use at gasoline service stations when used in conjunction with a Phase I vapor recovery system which has been certified by the Board.

NOW THEREFORE, IT IS HEREBY ORDERED that the WayneVac system is certified to be at least 95 percent effective in the self-serve and/or attended fueling use at gasoline service stations when used with a CARB-certified Phase I vapor recovery system. The maximum dispensing rate for the WayneVac system shall be ten (10.0) gallons per minute. Exhibit 1 contains a list of the equipment certified for use with the VaporVac system. Exhibit 2 contains installation and performance specifications for the system.

IT IS FURTHER ORDERED that compliance with the certification requirements and rules and regulations of the Division of Measurement Standards of the Department of Food and Agriculture, the State Fire Marshal's Office, and the Division of Occupational Safety and Health of the Department of Industrial Relations is made a condition of this certification.

IT IS FURTHER ORDERED that the certified WayneVac system shall, at a minimum, be operated in accordance with the manufacturer's recommended maintenance intervals and shall use the manufacturer's recommended operation, installation, and maintenance procedures.

IT IS FURTHER ORDERED that any alteration of the equipment, parts, design, or operation of the systems certified hereby is prohibited, and deemed inconsistent with this certification, unless such alteration has been approved by the Executive Officer or his/her designee.

IT IS FURTHER ORDERED that installations of the system certified hereby shall perform in actual use with the same effectiveness as the certification test systems. If, in the judgment of the Executive Officer, a significant fraction of installations fail to meet the specifications of this certification, or if a significant portion of the vehicle population is found to have configurations which significantly impair the system's collection efficiency, the certification itself may be subject to modification, suspension or revocation. Any revision to the certification and/or test procedures relevant to this certification may be the basis for evaluation of the system and may constitute grounds for modification, suspension or revocation of this certification.

IT IS FURTHER ORDERED that the following requirements are made a condition of certification. The WayneVac system shall be installed only in facilities which are capable of demonstrating on-going compliance with the vapor integrity requirements as specified in the CARB test procedures. The owner or operator of each installation shall conduct, and pass, a static pressure decay test at least once in each twelve month period. The pressure integrity test shall be conducted in accordance with a CARB-approved test procedure. (The most current draft procedure TP-201.3 may be used until a static pressure decay test procedure is adopted by the Board.) Alternative test procedures may be used if determined by the Executive Officer to yield comparable results and to not require components to possess greater integrity than was required for certification.

IT IS FURTHER ORDERED that, at such time as the contribution of the fugitive emissions which may result from pressurization of the storage tanks can be quantified, if such emissions are found to affect the overall effectiveness of the system, the efficiency of the system may be reevaluated and revised.

IT IS FURTHER ORDERED that all nozzles approved for use with the WayneVac system shall be 100 percent performance checked at the factory, including checks of proper functioning of all automatic shut-off mechanisms.

IT IS FURTHER ORDERED that each installation of the certified WayneVac system shall be performance tested during installation in the presence of the station manager or other responsible individual for ability to dispense gasoline and collect vapors without difficulty. The station manager, owner or operator shall also be provided with instructions on the proper use of the WayneVac system, its repair and maintenance, and where system replacement and system components can be readily obtained. Copies of the manufacturer's warranty for the WayneVac system shall be made available to the station manager, owner or operator.

Executed at Sacramento, California this 12 day of November, 1993.

Michael N. Schulz

for James D. Boyd
Executive Officer

Attachments

Executive Order G-70-153

Exhibit 1
WayneVac System Equipment List

Component	Manufacturer/Model	State Fire Marshal Identification Number
Nozzle	Husky V34 with VEG (VEG: Vapor Escape Guard) OR Any inverted coaxial nozzle CARB-certified for use with the WayneVac system.	005:021:008
Inverted Coaxial Hose	Thermoid Hi-Vac Goodyear Flexsteel OR Any inverted coaxial hose CARB-certified for use with the WayneVac system.	005:037:003 005:036:002
Pressure/Vacuum Valve	Any CARB-certified valve with the following pressure and vacuum settings, in inches water column (wc). Pressure: three plus or minus one-half inches (3.0 ± 0.5") water column. Vacuum: eight plus or minus two inches (8 ± 2") water column. Note: For systems installed before two CARB-certified valves which meet the above criteria are available, or within thirty days after that date, a valve with the following settings may be used for a period not to exceed four years from the date the second valve was certified: Pressure: at least one and not exceeding three and one-half inches (1 - 3.5") water column. Vacuum: at least one-half ounce/inch^2(0.87" wc). Local districts may require valves with higher pressure settings and/or may require earlier replacement of valves with lower than optimum pressure settings.	

Breakaway Couplings	Catlow AV200, AV200-1	005:030:005
	OPW 66CI	005:030:005
	Richards Industries	
	VA-50	005:031:007
	VA-51 (with vapor valve)	005:031:007
	OR	
	Any inverted coaxial breakaway CARB-certified for use with the WayneVac system.	
Dispensers	Vista-series dispensers: prefix/VXXXDX/suffix Where "V" = V (Vista), "D" = D (remote dispenser) "prefix" = C or blank "X" = any digit "suffix" = D1 or D2	
Retrofit Kits	#918645 (WayneVac kit) to be used WITH either #918643 (tubing kit for non-vapor dispenser) OR #918644 (tubing kit for Balance-ready dispenser) KITS SHALL BE USED ONLY WITH: Vista-series dispensers (same as above except no D1/D2 suffix), OR Non-Vista dispensers: DXY/A9C-EF Where "D" = D (non-Vista), "9" = 9, "-" = -, and "X" = D, S, T, L or V "Y" = 1 through 6 "A" = 3, 4 or 5 "C" = 0, 5 or 9 "E" = 1, 2 or 3 "F" = L or 3	

Executive Order G-70-153

Exhibit 2
Specifications for the
WayneVac Bootless Nozzle System

Typical installations of the WayneVac system are illustrated in Figures 2-A through 2-D, and dispenser hose configurations are shown in Figure 2-E.

Nozzles

1. A vapor escape guard (VEG) shall be installed on the nozzle at the base of the spout. Any nozzle with a VEG which is missing, or which is damaged such that at least one eighth (1/8) of the diameter is missing, or has cumulative damage equivalent to at least 1/8 of the diameter missing, is defective and shall be immediately removed from service.

3. The nozzle shall have a vapor valve which prevents the loss of vapor from the system, and which prevents the ingestion of air into the system when other nozzles which share the same vapor pump are used.

3. Failure mode testing demonstrated that blockage of some of the vapor collection holes in the spout has negligible effect on the operation of the system until only two or fewer holes remain unblocked. Any Husky V34 nozzle which is found to have less than two unobstructed vapor collection holes shall be immediately removed from service.

Inverted Coaxial Hoses

1. The length of hose which may be in contact with the island and/or ground when the nozzle is properly mounted on the dispenser is limited to six inches.

2. The hose configuration shall comply with Figure 2-E; there may be fewer hoses than shown. Within the constraints of the configurations, the maximum allowable length of any hose shall be fifteen (15) feet.

Breakaway Couplings

1. Breakaway couplings are optional but, if installed, only certified breakaways may be used.

2. If breakaways are installed which do not have a valve to close the vapor path, air will be ingested into the system whenever other nozzles at the same fueling point are used while a breakaway is separated and not recoupled. Therefore, if breakaways without vapor valves are used, all nozzles at the fueling point (one side of a multi-grade dispenser) shall be immediately removed from service whenever a breakaway is separated and not immediately recoupled.

WayneVac System

1. The normal operating range of the system, as measured by air-to-liquid (A/L) ratio testing, is 1.00 plus or minus 0.10 (0.90 to 1.10). The A/L ratio of the system shall be measured at a flow rate between seven and nine gallons per minute (7 - 9 gpm). Any fueling point not capable of demonstrating compliance with this performance standard shall be deemed defective and removed from service. For the purpose of determining noncompliance, the results of at least three A/L tests shall be averaged. The A/L ratio shall be determined by a CARB-approved or district-approved test procedure. (Draft procedure TP-201.5 may be used until an air to liquid ratio test procedure is adopted by the Board.) Alternative test procedures may be used if they are determined by the Executive Officer to yield comparable results.

   Note: this test procedure returns air rather than vapor to the storage tank, and normally causes an increase in storage tank pressure and may cause vent emissions. This is a temporary condition due to the test and should not be considered an indication of malfunction or noncompliance.

2. The WayneVac shall be equipped with electronic safeguards designed to prevent fuel dispensing if the vapor pump motor fails. Malfunction of the vapor pump motor is indicated when more than 1/2 power is applied for over 10 seconds with no rotation detected. This condition shall cause the dispenser computer to recognize an error and shut down the dispenser and display an appropriate error message.

3. The mass emission rate measured during the efficiency test :
   0.226 pounds per 1,000 gallons.

Vapor Lines and Tank Vents

1. The pressure drop through the system, measured at a flow rate of 60 SCFH with dry Nitrogen, shall be as low as possible. The maximum recommended pressure drop from the dispenser riser to the storage tank is 0.02 inches water column. The maximum allowable pressure drop shall not exceed one/half inch (0.5") water column. The pressure drop shall be measured from the dispenser riser to the storage tank with the poppeted Phase I vapor connection open and with pressure/vacuum valves installed or with the vents capped.

2. The dispenser shall be connected to the riser with either flexible or rigid material which is listed for use with gasoline. The dispenser-to-riser connection shall be installed so that any liquid in the lines will drain toward the storage tank. The internal diameter of the connector, including all fittings, shall not be less than five-eighths inch (5/8")

3. A pressure/vacuum (P/V) valve shall be installed on each tank vent. Vent lines may be manifolded provided the manifold is installed at a height not less than 12 feet above the driveway surface used for Phase I tank truck filling operations. At least one P/V valve shall be installed on manifolded vents. If two P/V valves are desired, they shall be installed in parallel, so that each can serve as a backup for the other if one should fail to open properly. The P/V valve shall be CARB-certified as specified in Exhibit 1. The outlets shall vent upward and be located to eliminate the possibility of vapors accumulating or traveling to a source of ignition or entering adjacent buildings.

4. The recommended nominal inside diameter of the underground Phase II plumbing is as indicated in Figures 2-A through 2-D. The vapor return lines shall be manifolded below grade at the tanks as indicated in the Figures.

   Exception: For installations with a vapor return line directly to only one tank, and for which a manifold on the tank vents will be used to provide part of the vapor return path to other tanks, the vent manifold may be used as an alternative to the underground manifold only in existing installations where the vapor piping is already installed, and shall not be used in "new" installations where vapor piping is being installed. For installations with dedicated vapor piping directly to each tank, the vent manifold is approved for both new and existing installations and an additional tank manifold below grade is optional but not required.

5. All vapor return lines shall slope a minimum of 1/8 inch per foot. A slope of 1/4 inch or more per foot is recommended wherever feasible.

6. All vapor return and vent piping shall be installed in accordance with the manufacturer's instructions and all applicable regulations.

Storage Tank and Phase I System

WARNING: Phase I fill caps should be opened with caution because the storage tank may be under pressure.

1. A threaded tap shall be installed at which the storage tank pressure may be monitored. The tap may be in the dispenser riser connection or on the vent line, and shall be accessible for connection to a pressure gauge. One tap is adequate for manifolded systems. The tap shall remain plugged and vapor tight except when test equipment is being connected to or removed from it. If located on the vent line, the tap shall be at least six feet (6') and not more than eight feet (8') above grade.

2. The Phase I vapor and fill caps provide an additional seal which may prevent vapor emissions when they are in place. However, the caps must be removed during Phase I operations and may result in loss of vapor from the storage tank. Therefore, compliance with static pressure decay test criteria shall be demonstrated with these caps removed. Prior to pressurizing the system, verify that the liquid level in the storage tanks is at least eight inches (8") above the highest opening at the bottom of the submerged drop tube.

3. The Phase I vapor recovery system shall be operated during product deliveries so as to minimize the loss of vapors from the facility storage tank, which may be under pressure. Provided it is not in conflict with established safety procedures, this may be accomplished in the following manner: The Phase I vapor return hose is connected to the delivery tank and to the delivery elbow before the elbow is connected to the facility storage. tank. The delivery tank vapor valve is opened only after all vapor connections have been made, and is closed before disconnection of any vapor hoses. The vapor hose is disconnected from the storage tank before it is disconnected from the delivery tank.

4. Spill containment manholes which have drain valves shall demonstrate compliance with the static pressure decay criteria with the drain valves installed as in normal operation. Manholes with cover-actuated drain valves shall demonstrate compliance with static pressure decay test criteria both with the cover open and with the cover closed.

5. Coaxial Phase I vapor recovery systems and manholes with cover-actuated drain valves certified prior to the effective date of this Order shall not be used with the WayneVac Phase II system; only CARB-certified two-point Phase I systems shall be installed. Where the WayneVac installation is made by retrofitting previously installed equipment, local districts may elect to allow the

existing coaxial Phase I systems to remain in use for a specifically identified period of time provided the following conditions are met:

- the existing coaxial Phase I system is a poppeted, CARB-certified system;
- installation of the Phase II system requires no modification of the storage tanks and/or connections; and
- the existing coaxial Phase I equipment is in good working order and has demonstrated compliance with the static pressure decay test criteria when tested with all fill caps removed.

Executive Order G-70-153

Figure 2-A
Typical Installation of the
Dresser/Wayne WayneVac Phase II Vapor Recovery System
With Two-Point Phase I System

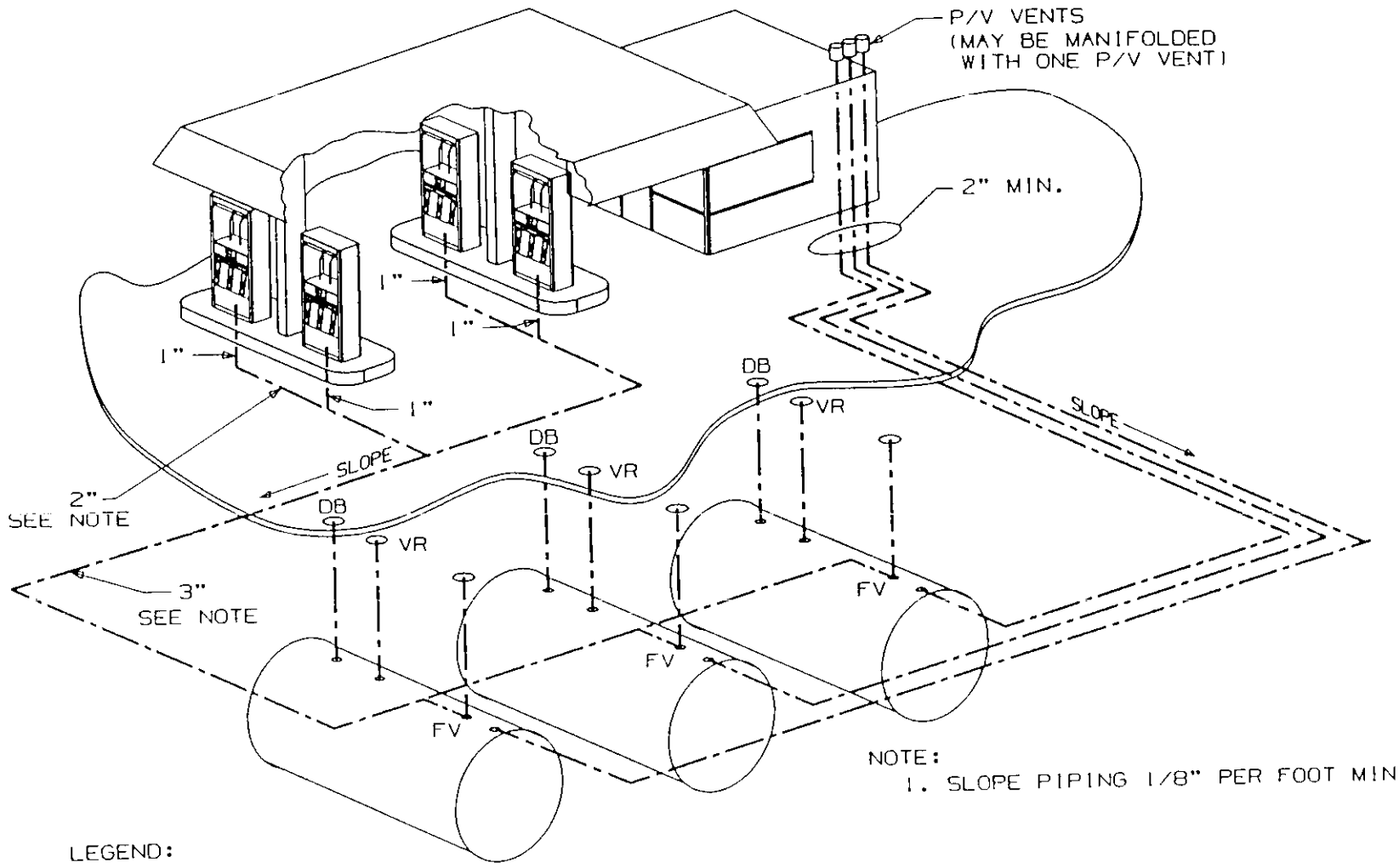

Figure 2-C
Typical Installation of the
Dresser/Wayne WayneVac Phase II Vapor Recovery System
With Two-Point Phase I System

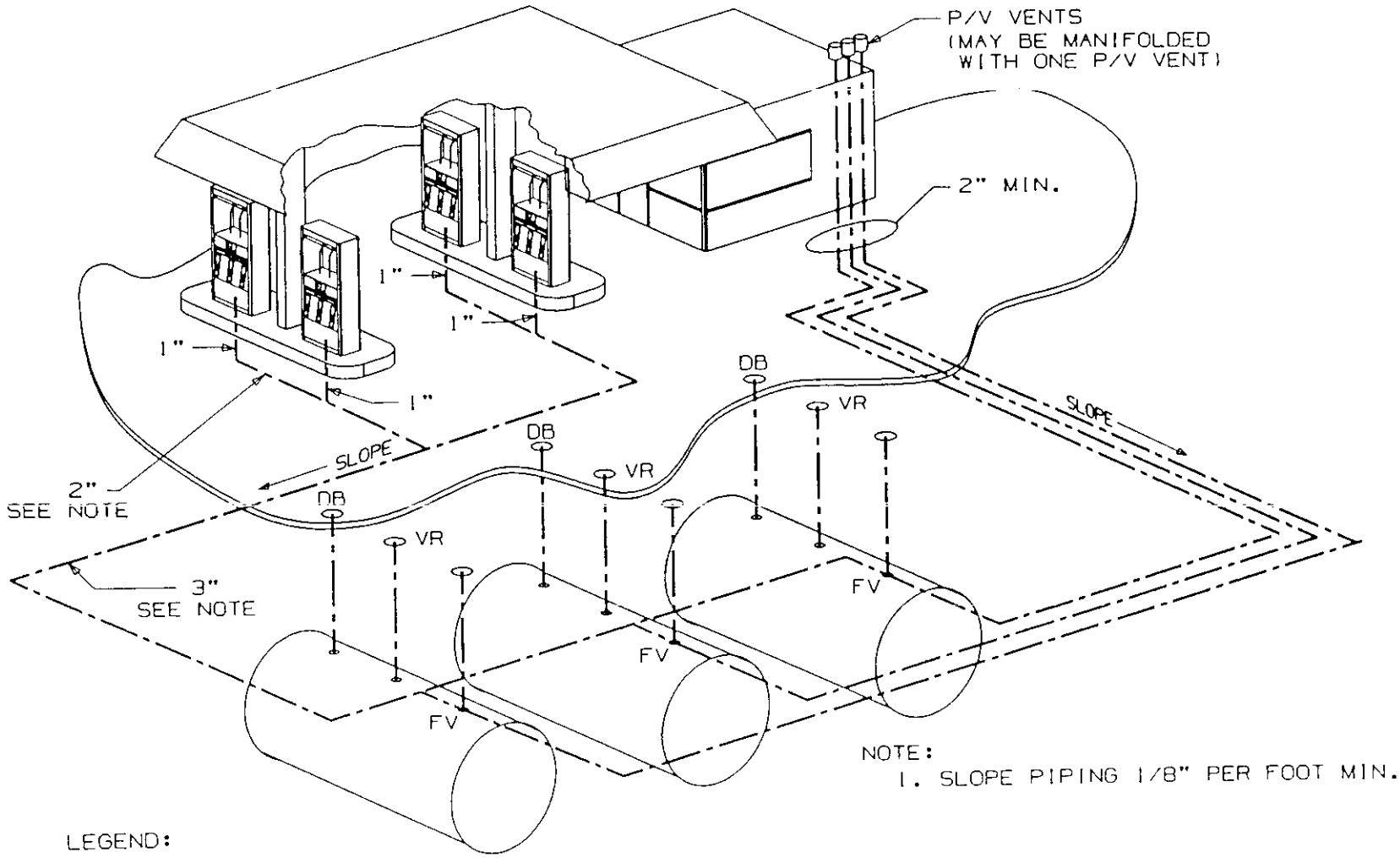

Executive Order G-70-153

Figure 2-E
Hose Configuration & Possibilities
For Vista and Nonvista Dispensers

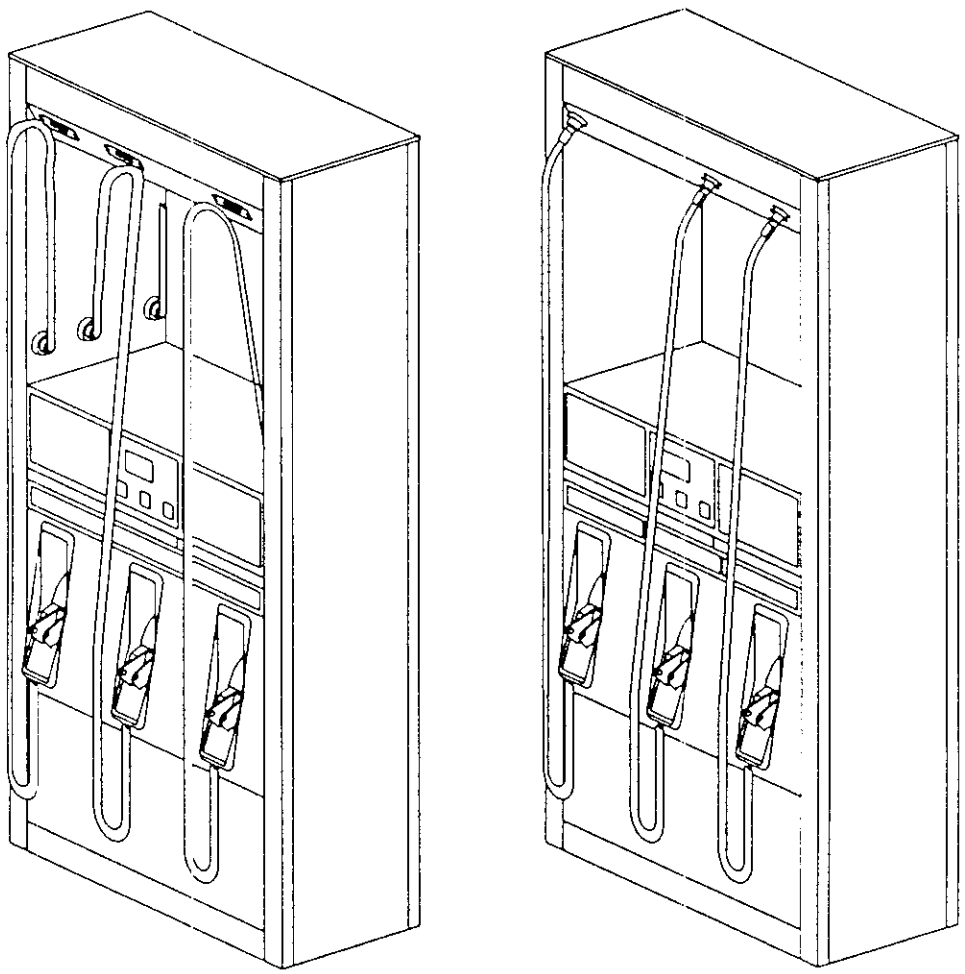

DISPENSERS CAN BE FOUR, THREE, TWO, OR ONE HOSE PER SIDE.

Figure 2-D
Typical Installation of the
Dresser/Wayne WayneVac Phase II Vapor Recovery System
With Two-Point Phase I System

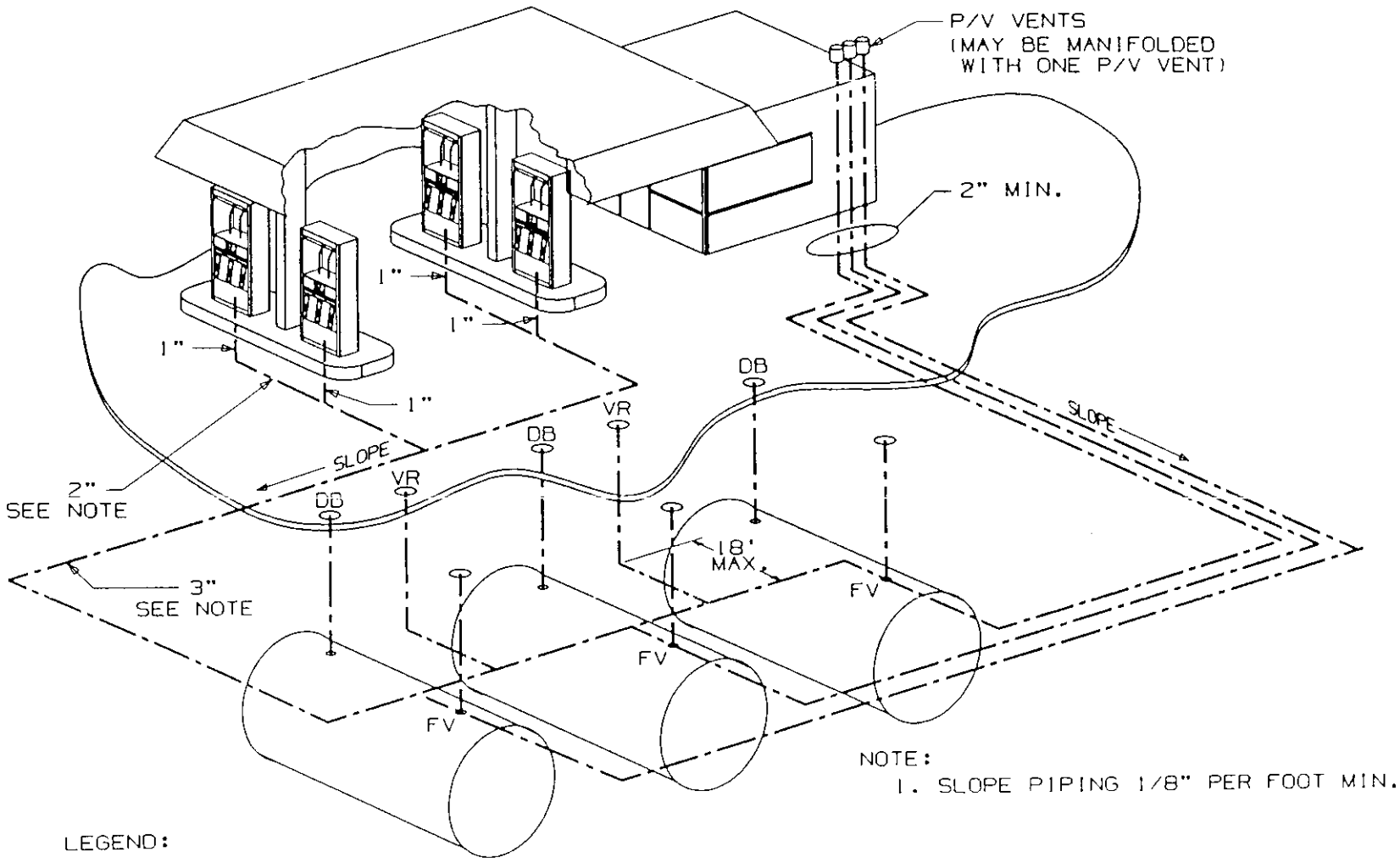

NOTE:
1. SLOPE PIPING 1/8" PER FOOT MIN.

LEGEND:

DB = DROP BOX-FUEL
VR = VAPOR RECOVERY PHASE I (2 MINIMUM)
FV = BALL FLOAT VALVE
(A VR MAY BE COMBINED WITH EACH FV)

Figure 2-B
Typical Installation of the
Dresser/Wayne WayneVac Phase II Vapor Recovery System
With Two-Point Phase I System

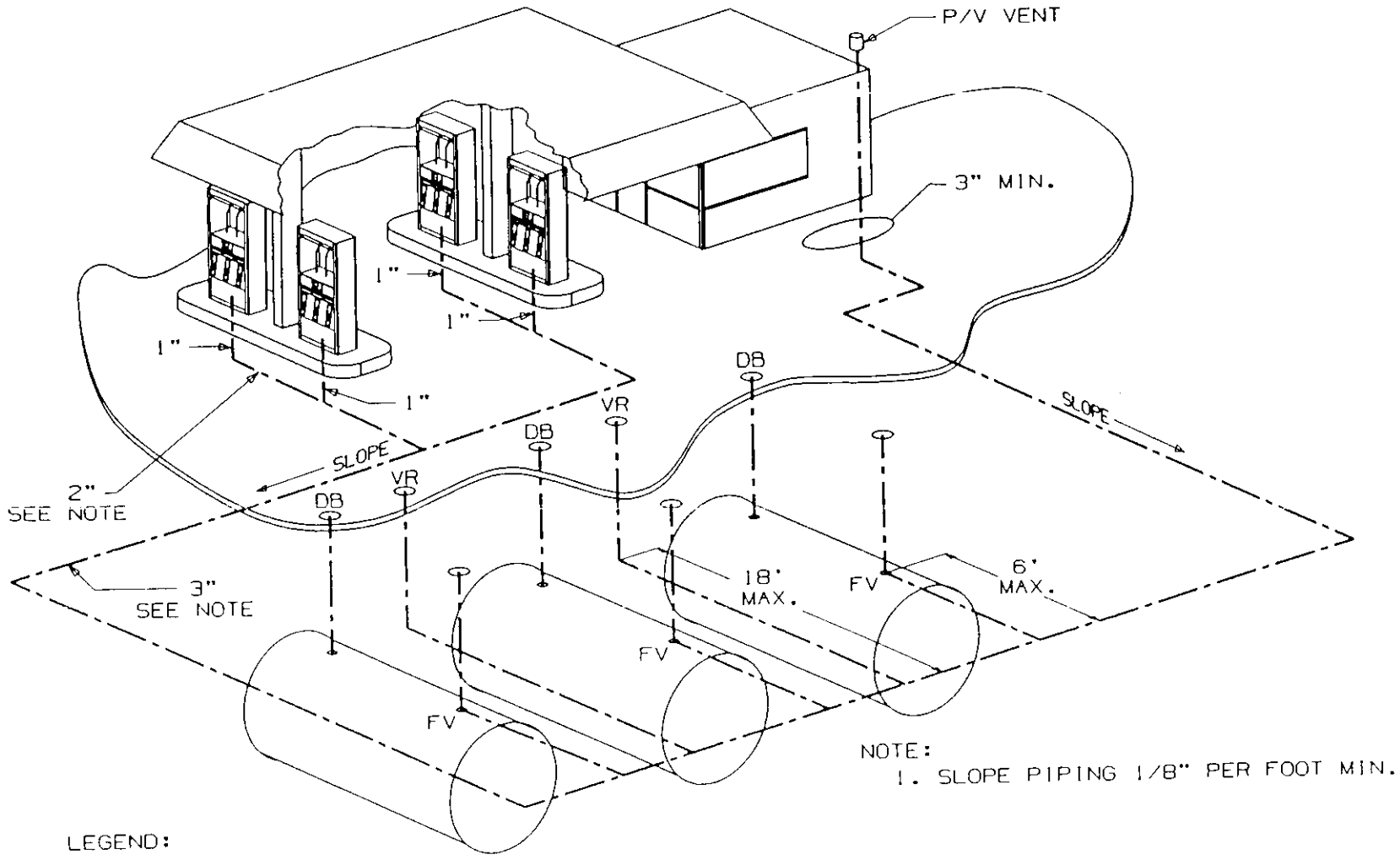

NOTE:
1. SLOPE PIPING 1/8" PER FOOT MIN.

LEGEND:

DB = DROP BOX-FUEL
VR = VAPOR RECOVERY PHASE I (2 MINIMUM)
FV = BALL FLOAT VALVE
(A VR MAY BE COMBINED WITH EACH FV)