State of California
AIR RESOURCES BOARD

Executive Order G-70-153-AA

Modification to the Certification of the Dresser/Wayne WayneVac Phase II Vapor Recovery System

WHEREAS, the California Air Resources Board ("the Board" or "CARB") has established, pursuant to California Health and Safety Code sections 39600, 39601 and 41954, certification procedures for systems designed for the control of gasoline vapor emissions during motor vehicle fueling operations (Phase II vapor recovery systems) in its "Certification Procedures for Gasoline Vapor Recovery Systems at Service Stations" (the "Certification Procedures") as last amended December 4, 1981, incorporated by reference into Title 17, California Code of Regulations, Section 94001;

WHEREAS, the Board has established, pursuant to California Health and Safety Code sections 39600, 39601 and 41954, test procedures for determining the compliance of Phase II vapor recovery systems with emission standards in its "Test Procedures for Determining the Efficiency of Gasoline Vapor Recovery Systems at Service Stations" (the "Test Procedures") as last amended September 1, 1982, incorporated by reference into Title 17, California Code of Regulations, Section 94000;

WHEREAS, Dresser Industries, Wayne Division ("Wayne"), requested and was granted certification of the WayneVac Phase II vapor recovery system ("WayneVac system") pursuant to the Certification Procedures and Test Procedures on November 12, 1993, by Executive Order G-70-153;

WHEREAS, Wayne requested certification of the WayneVac system with the OPW 11VAI nozzles and for WayneVac retrofit kits designed for Gilbarco dispensers;

WHEREAS, the requested modifications to the certification of the WayneVac system have been evaluated pursuant to the Board's Certification Procedures;

WHEREAS, Section VIII-A of the Certification Procedures provides that the Executive Officer shall issue an order of certification if he or she determines that the vapor recovery system conforms to all of the requirements set forth in Sections I through VII of the Certification Procedures; and

WHEREAS, I, James D. Boyd, Air Resources Board Executive Officer, find that the WayneVac system conforms with all the requirements set forth in Sections I through VII of the Certification Procedures, and results in a vapor recovery system which is at least 95 percent effective for attendant and/or self-serve use at gasoline service stations when used in conjunction with a Phase I vapor recovery system which has been certified by the Board.

NOW, THEREFORE, IT IS HEREBY ORDERED that the WayneVac system is certified to be at least 95 percent effective in attended and/or self-serve mode when used with a CARB-certified Phase I vapor recovery system as specified in Exhibit 2 of this Order. Fugitive emissions which may occur when the underground storage tanks are under positive pressure have not been quantified and were not included in the calculation of system effectiveness. Exhibit 1 contains a list of the equipment certified for use with the WayneVac system. Exhibit 2 contains installation and performance specifications for the system.

IT IS FURTHER ORDERED that the maximum dispensing rate for installations of the WayneVac system shall not exceed ten (10.0) gallons per minute in compliance with the limitation imposed by United States Environmental Protection Agency as specified in the Federal Register, Volume 58, Number 55, page 16019.

IT IS FURTHER ORDERED that compliance with the certification requirements and rules and regulations of the Division of Measurement Standards of the Department of Food and Agriculture, the State Fire Marshal's Office, and the Division of Occupational Safety and Health of the Department of Industrial Relations is made a condition of this certification.

IT IS FURTHER ORDERED that all nozzles approved for use with the WayneVac system shall be 100 percent performance checked at the factory, including checks of the integrity of the vapor and liquid path, as specified in Exhibit 2 of this Order, and of the proper functioning of all automatic shut-off mechanisms.

IT IS FURTHER ORDERED that the following requirements are made a condition of certification. The WayneVac system shall be installed only in facilities which are capable of demonstrating compliance with the vapor integrity requirements of the local air pollution control district ("district") with jurisdiction over the installation. The owner or operator of the installation shall conduct, and pass, a static pressure decay test at least once in each twelve month period. The test shall be conducted in accordance with a CARB-approved test procedure, and the results shall be made available to the district upon request within fifteen days after the test is conducted. (The most current draft procedure TP-201.3 may be used until a static pressure decay test procedure is adopted by the Board.) Alternative test procedures may be used if determined by the Executive Officer to yield comparable results.

IT IS FURTHER ORDERED that each vapor pump shall be adjusted and 100 percent performance checked at the factory, including verification that the vapor recovery system performance is within the range specified in Exhibit 2 of this Order.

IT IS FURTHER ORDERED that the system, as installed, shall comply with the procedures and performance standards the test installation was required to meet during certification testing. Local districts may adopt stricter procedures or performance standards in accordance with the California Health and Safety Code section 41954 (g). Failure to demonstrate compliance with procedures or performance standards stricter than those imposed during certification testing does not constitute failure of the WayneVac system to meet the terms and conditions of this Executive Order. If, in the judgment of the Executive Officer, a significant fraction of installations fail to meet the specifications of this certification, or if a significant portion of the vehicle population is found to have configurations which significantly impair the system's collection efficiency, the certification itself may be subject to modification, suspension or revocation.

IT IS FURTHER ORDERED that revision to the certification and/or test procedures relevant to this certification may be the basis for evaluation of the system and may constitute grounds for modification, suspension or revocation of this certification.

IT IS FURTHER ORDERED that the certified WayneVac system shall be performance tested during installation for ability to dispense gasoline and collect vapors without difficulty, in the presence of the station manager or other responsible individual. The station manager, owner or operator shall also be provided with instructions on the proper use of the WayneVac system, its repair and maintenance, and where system replacement and system components can be readily obtained.

IT IS FURTHER ORDERED that the certified WayneVac system shall be warranted in writing, for at least three years, to the ultimate purchaser and each subsequent purchaser, that the vapor recovery system is designed, built and equipped so as to conform at the time of original installation or sale with the applicable regulations and is free from defects in materials and workmanship which would cause the vapor recovery system to fail to conform with applicable regulations. Copies of the manufacturer's warranty for the WayneVac system shall be made available to the station manager, owner or operator. Hoses, nozzles and breakaway couplings shall be warranted to the ultimate purchaser as specified above for at least one year, or for the expected useful life, whichever is longer.

IT IS FURTHER ORDERED that the certified WayneVac system shall be operated in accordance with the manufacturer's recommended maintenance intervals and shall use the manufacturer's recommended operation, installation, and maintenance procedures.

IT IS FURTHER ORDERED that any alteration of the equipment, parts, design, or operation of the systems certified hereby is prohibited, and deemed inconsistent with this certification, unless such alteration has been approved by the Executive Officer or his/her designee.

IT IS FURTHER ORDERED that the WayneVac certification Executive Order G-70-153, issued November 12, 1993, is hereby superceded by this Executive Order.

Executed at Sacramento, California this 14th day of July, 1994.

James D. Boyd
Executive Officer

Attachments

Executive Order G-70-153-AA
Exhibit 1
WayneVac System Equipment List

Component	Manufacturer/Model	State Fire Marshal Identification Number
Nozzle		
	OPW 11VAI-xx	005:008:050
	(with vapor valve and VEG*)	
	xx = 64(15/16 OD spout, hold open latch (HOL))	
	69(13/16" OD spout, HOL)	
	84 (15/16" OD spout, no HOL)	
	89(13/16" OD spout, no HOL)	
	* VEG: Vapor Escape Guard - see Figure 2C-1	
	Husky V34 Model 6200-4	005:021:008
	(with vapor valve and VEG*)	
	VEG: Vapor Escape Guard - see Figure 2C-2	
	OR	
	Any inverted coaxial nozzle CARB-certified for use with the WayneVac system.	
Inverted Coaxial Hose	Dayco 7282 Superflex 2000	005:033:005
	Goodyear Flexsteel	005:036:002
	Thermoid Hi-Vac	005:037:003
	OR	
	Any inverted coaxial hose CARB-certified for use with the WayneVac system.	
Breakaway Couplings	Catlow AV200 (no vapor valve)	005:030:005
	AV200-1 (no vapor valve)	005:030:005
	AV2001 (with vapor valve	005:030:006
	Husky 4034 (with vapor valve)	005:021:009
	OPW 66CI (no vapor valve)	005:030:005
	66CIP (with vapor valve)	005:030:006
	Richards Industries	
	VA-50 (with vapor valve)	005:031:007
	VA-51 (no vapor valve)	005:031:007
	VA-60 (with vapor valve)	005:031:009
	VA-61 (no vapor valve)	005:031:009
	OR	
	Any inverted coaxial breakaway CARB-certified for use with the WayneVac system.	

Pressure/Vacuum Valve	OPW 523LP, 523LPS (settings as specified below) Hazlett H-PVB-1 Gold label (settings as specified below) OR Any CARB-certified valve with the following pressure and vacuum settings, in inches water column (wc). Pressure: three plus or minus one-half inches (3.0 ± 0.5") water column. Vacuum: eight plus or minus two inches (8 ± 2") water column. Note: For systems installed before August 31, 1994, a valve with the following settings may be used until September 1, 1998. Local districts may require earlier replacement of these valves. Pressure: at least one and not exceed 3.5" water column. Vacuum: at least one-half ounce/inch^2 (0.87" water column).	005:008:051 005:017:004
Vapor Pumps	Thomas positive displacement Vane pump/motor Model Number: VR-0020	
Dispensers	Vista-series dispensers: prefix/VxxxDx/suffix "prefix" = C or blank V = V (Vista) "x" = any digit D = D (remote dispenser) "suffix" = D1 or D2	
Retrofit Kits	#918645 (WayneVac kit) to be used WITH either #918643 (tubing kit for non-vapor dispenser) OR #918644 (tubing kit for Balance-ready dispenser) KITS SHALL BE USED ONLY WITH: Vista-series dispensers (same as above except no D1/D2 suffix), OR Non-Vista dispensers: dxy/a9c-ef "d" = D (non-Vista), "9" = 9, "-" = - "x" = D, S, T, L or V "y" = 1 through 6 "a" = 3, 4 or 5 "c" = 0, 5 or 9 "e" = 1, 2 or 3 "f" = L or 3	

Retrofit Kits (cont.)

WayneVac Retrofit x-918726-KIT 005:019:003
"x" = 1 or 2.

Note: x-918726-Kit shall be used only with:
Gilbarco Inc. Model MPD-1/2/C and 3
power operated flammable liquid dispensers that have a UL listed Wayne retrofit electronic computer kit (881627 series). Refer to Figures 1A-1 and 1A-2 for proper dispenser identification.

Executive Order G-70-153-AA

Exhibit 1

Figure 1A-1
WayneVac Retrofit Gilbarco MPD's

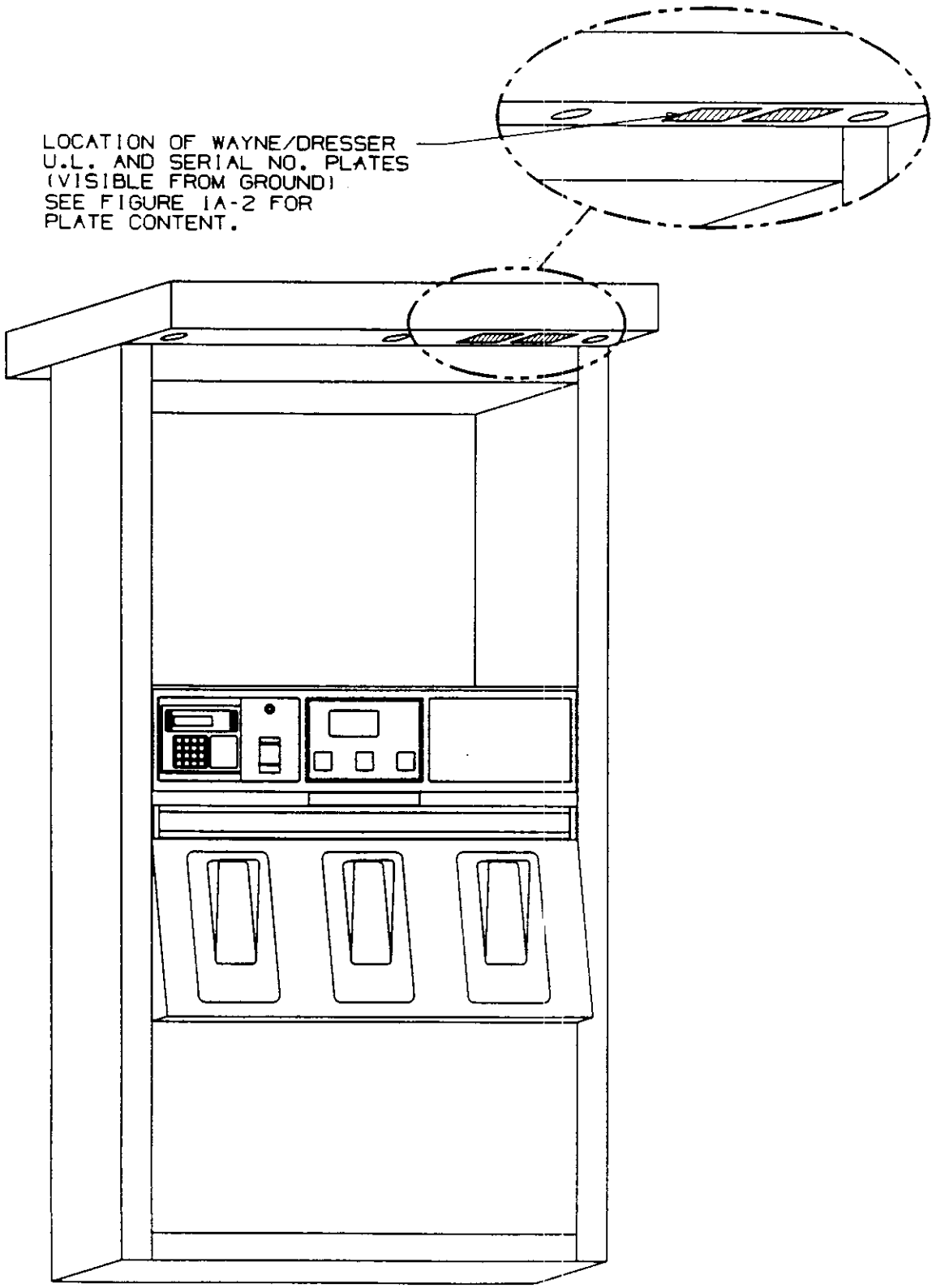

Executive Order G-70-153-AA

Exhibit 1

Figure 1A-2
WayneVac Retrofit Gilbarco MPD's

UNDERWRITERS LABORATORIES INC. ®
LISTED
9L27

VAPOR RECOVERY RETROFIT ASSEMBLY
1-918726-KIT
WHEN INSTALLED AND USED IN ACCORDANCE WITH
UL REPORT REFERENCE NO. MH17133
DATED JANUARY 31, 1994

Wayne DRESSER

WAYNE VAC RETROFIT KIT
MODEL NO. WVAC
SERIAL NO.

THIS PRODUCT MAY BE COVERED
BY ONE OR MORE PATENTS
GRANTED OR PENDING.

Wayne DRESSER

WAYNE DIVISION
DRESSER INDUSTRIES, INC.
SALISBURY, MARYLAND 21801

Executive Order G-70-153-AA

Exhibit 2

Specifications for the WayneVac Bootless Nozzle System

Figures 2A-1 through 2A-4 contain drawings of typical installations of the WayneVac system. Figure 2B depicts the operation and location of component parts of the WayneVac system. Figures 2C-1 and 2C-2 depict the nozzles approved for use with the system.

Nozzles

1. A vapor escape guard (VEG) shall be installed on the nozzle at the base of the spout, as shown in Figure 2C. Any nozzle with a VEG which is missing, or which is damaged such that at least one-eighth (1/8) of the diameter is missing, or which has cumulative damage equivalent to at least 1/8 of the diameter missing, is defective and shall be immediately removed from service.

2. Failure mode testing demonstrated that blockage of some of the vapor collection holes in the spout has negligible effect on the operation of the system until only one hole remains unblocked. Any Husky V34 or OPW 11VAI nozzle which is found to have less than two unobstructed vapor collection holes is defective and shall be immediately removed from service.

3. The nozzles shall have an integral vapor valve which prevents the loss of vapor from the underground storage tanks, ensures proper operation of the system and prevents the ingestion of air into the system when another nozzle which is connected to the same vapor pump is used. Any nozzle with a defective vapor valve will substantially impair the effectiveness of the other nozzles associated with the same vapor pump. Therefore, any nozzle with a defective vapor valve, and all nozzles at the same fueling point (dispenser side), shall be immediately removed from service and the vapor path shall be closed as soon as possible. NOTE: A defective vapor valve will also impair the integrity of the system and may result in vapor loss from or air ingestion into the underground storage tanks.

4. Nozzles shall be 100 percent performance checked at the factory, including checks of the integrity of the vapor path at a pressure of at least two inches water column and at a vacuum of at least twenty inches water column.

5. Leaded and unleaded spouts are interchangeable.

Inverted Coaxial Hoses

1. The length of hose which may be in contact with the island and/or ground when the nozzle is properly mounted on the dispenser is limited to six inches (6").

2. The hose configuration shall comply with Figure 2B-1; there may be 1 to 4 hoses on each side of the dispenser. Within the constraints of the configurations, the maximum allowable length of the hose shall be fifteen feet (15').

Breakaway Couplings

1. Breakaway couplings are optional but, if installed, only certified breakaways may be used.

2. The following section does not apply to breakaways that contain a valve which closes the vapor path when it is separated. Operation of the system when a breakaway coupling is separated will substantially reduce the effectiveness of the other nozzles at that fueling point (dispenser side). Separated breakaways shall be recoupled, or the vapor path plugged, as soon as possible Other nozzles at the fueling point shall not be used when such a breakaway is separated.
   NOTE: A separated breakaway will also impair the integrity of the system and may result in vapor loss from or air ingestion into the underground storage tanks.

WayneVac System

1. The normal operating range of the system, as measured by air-to-liquid (A/L) ratio testing, is 1.00. plus or minus 0.10 (0.90 to 1.10). The A/L ratio of the system shall be measured at a flowrate between seven and ten gallons per minute (7 - 10 gpm). Any fueling point not capable of demonstrating compliance with this performance standard shall be deemed defective and removed from service. The A/L ratio shall be determined by a CARB-approved or district-approved test procedure. (Draft procedure TP-201.5 may be used until an A/L ratio test procedure is adopted by the Board. Alternative test procedures may be used if they are determined by the Executive Officer to yield comparable results.)
   NOTE: this test procedure returns air rather than vapor to the storage tank, and normally causes an increase in storage tank pressure which may result in vent emissions. This is a temporary condition due to the test and should not be considered an indication of malfunction or noncompliance.

2. The WayneVac system shall be equipped with electronic safeguards designed to ensure that no fuel is dispensed if the vapor pump motor fails. Malfunction of the vapor pump motor is indicated when more than 1/2 power is applied for over 10 seconds with no rotation detected. This condition shall cause the dispenser computer to recognize an error and shut down the dispenser and display an appropriate error message.

Vapor Lines and Underground Storage Tank (UST) Vents

1. The recommended maximum pressure drop through the system, measured at a flow rate of 60 SCFH with dry Nitrogen gas, is 0.02 inches water column (0.03 inches water column if the measurement includes an impact valve). The maximum allowable pressure drop through the system shall never exceed one/half inch (0.5") water column at 60 SCFH. The pressure drop shall be measured from the dispenser riser to the UST with pressure/vacuum valves installed and with the poppeted Phase I vapor connection open.

2. The dispenser shall be connected to the riser with either flexible or rigid material which is listed for use with gasoline. The dispenser-to-riser connection shall be installed so that any liquid in the lines will drain toward the UST. The internal diameter of the connector, including all fittings, shall be not less than five-eights inch (5/8").

3. The recommended nominal inside diameter of the underground Phase II plumbing is as indicated in Figures 2A-1 through 2A-4. Smaller vapor lines are not recommended but may be used provided the above specified pressure drop criteria is met. The vapor return lines shall be manifolded as shown inFigures 2A-1 through 2A-4.
   Exception: For installations with a vapor return line directly to only one tank, and for which a manifold on the tank vents will be used to provide part of the vapor return path to other tanks, the vent manifold may be used as an alternative to the underground manifold <u>only</u> in existing installations where the vapor piping is already installed, and shall not be used in "new" installations where vapor piping is being installed. For installations with dedicated vapor piping directly to each tank, the vent manifold is approved for both new and existing installations and an additional tank manifold below grade is optional but not required.

4. All vapor return lines shall slope a minimum of 1/8 inch per foot. A slope of 1/4 inch or more per foot is recommended wherever feasible.

5. All vapor return and vent piping shall be installed in accordance with the manufacturer's instructions and all applicable regulations.

6. A pressure/vacuum (P/V) valve shall be installed on each tank vent. Vent lines may be manifolded provided the manifold is installed at a height not less than 12 feet above the driveway surface used for Phase I tank truck filling operations. At least one P/V valve shall be installed on manifolded vents. If two P/V valves are desired, they shall be installed in parallel, so that each can serve as a backup for the other if one should fail to open properly. The P/V valve shall be CARB-certified as specified in Exhibit 1. The outlets shall vent upward and be located to eliminate the possibility of vapors accumulating or traveling to a source of ignition or entering adjacent buildings.

Underground Storage Tank (UST) and Phase I System

WARNING: Phase I fill caps should be opened with caution because the UST may be under pressure.

1. A threaded tap shall be installed at which the UST pressure may be monitored. The tap may be in the dispenser riser connection or on the vent line, and shall be accessible for connection to a pressure gauge. One tap is adequate for manifolded systems. The tap shall remain plugged and vapor tight except when test equipment is being connected to or removed from it. If located on the vent line, the tap shall be at least six feet (6') and not more than eight feet (8') above grade. NOTE: Frequent venting (except when caused by air ingested into the system during the performance of the A/L ratio test, Phase I activities or other events not specifically caused by the Phase II system) may indicate system malfunction. Observation of rapid pressure decay when no vehicles are fueling may indicate leaks in the system; a static pressure decay test may be used to determine compliance with the vapor integrity requirements.

2. The Phase I vapor and fill caps provide an additional seal which may prevent vapor emissions when they are in place. However, the caps must be removed during Phase I operations and may result in loss of vapor from the UST. Therefore, compliance with static pressure decay test criteria shall be demonstrated with these caps removed. Prior to pressurizing the system, verify that the liquid level in the USTs is at least eight inches (8") above the highest opening at the bottom of the submerged drop tube.

3. Spill containment manholes which have drain valves shall demonstrate compliance with the static pressure decay criteria with the drain valves installed as in normal operation. Manholes with cover-actuated drain valves shall demonstrate compliance with static pressure decay test criteria both with the cover open and with the cover closed.

4. Coaxial Phase I vapor recovery systems and manholes with cover-actuated drain valve certified prior to the effective date of this Order shall not be used with the WayneVac Phase II system; only CARB-certified non-coaxial Phase I systems shall be installed. Where the WayneVac system installation is made by retrofitting previously installed equipment, local districts may elect to allow the existing coaxial Phase I systems to remain in use for a specifically identified period of time provided the following conditions are met:

    - The existing coaxial Phase I system is a poppeted, CARB-certified system;
    - installation of the Phase II system requires no modification of the UST(s) and/or connections; and
    - the existing coaxial Phase I equipment is in good working order and has demonstrated compliance with static pressure decay test criteria when tested with all fill caps removed.

5. The Phase I vapor recovery system shall be operated during product deliveries so as to minimize the loss of vapors from the facility storage tank which may be under pressure. There shall be no less than one vapor return hose connected for each product being delivered. Provided it is not in conflict with established safety procedures, this may be accomplished in the following manner:

    - The Phase I vapor return hose is connected to the delivery tank and to the delivery elbow before the elbow is connected to the facility storage tank;
    - the delivery tank is opened only after all vapor connections have been made, and is closed before connection of any vapor return hoses;
    - the existing coaxial Phase I equipment is in good working order and has demonstrated compliance with static pressure decay test criteria when tested with all fill caps removed; and
    - the vapor return hose is disconnected from the facility storage tank before it is disconnected from the delivery tank.

Executive Order G-70-153-AA

Exhibit 2

Figure 2A-1

Typical Installation of the
Dresser/Wayne WayneVac Phase II Vapor Recovery System
With Two-Point Phase I System

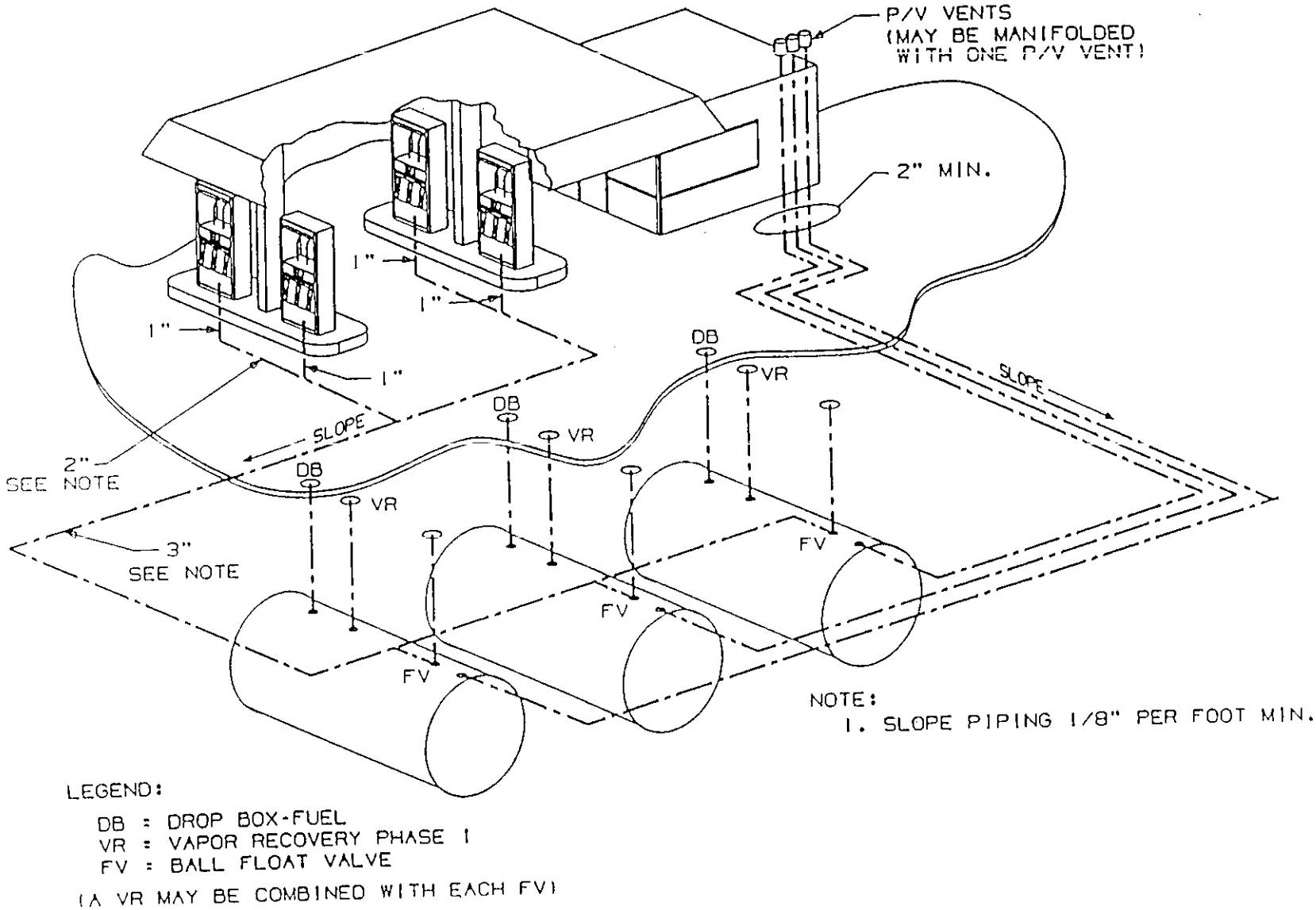

Executive Order G-70-153-AA

Exhibit 2

Figure 2A-2

Typical Installation of the
Dresser/Wayne WayneVac Phase II Vapor Recovery System
With Two-Point Phase I System

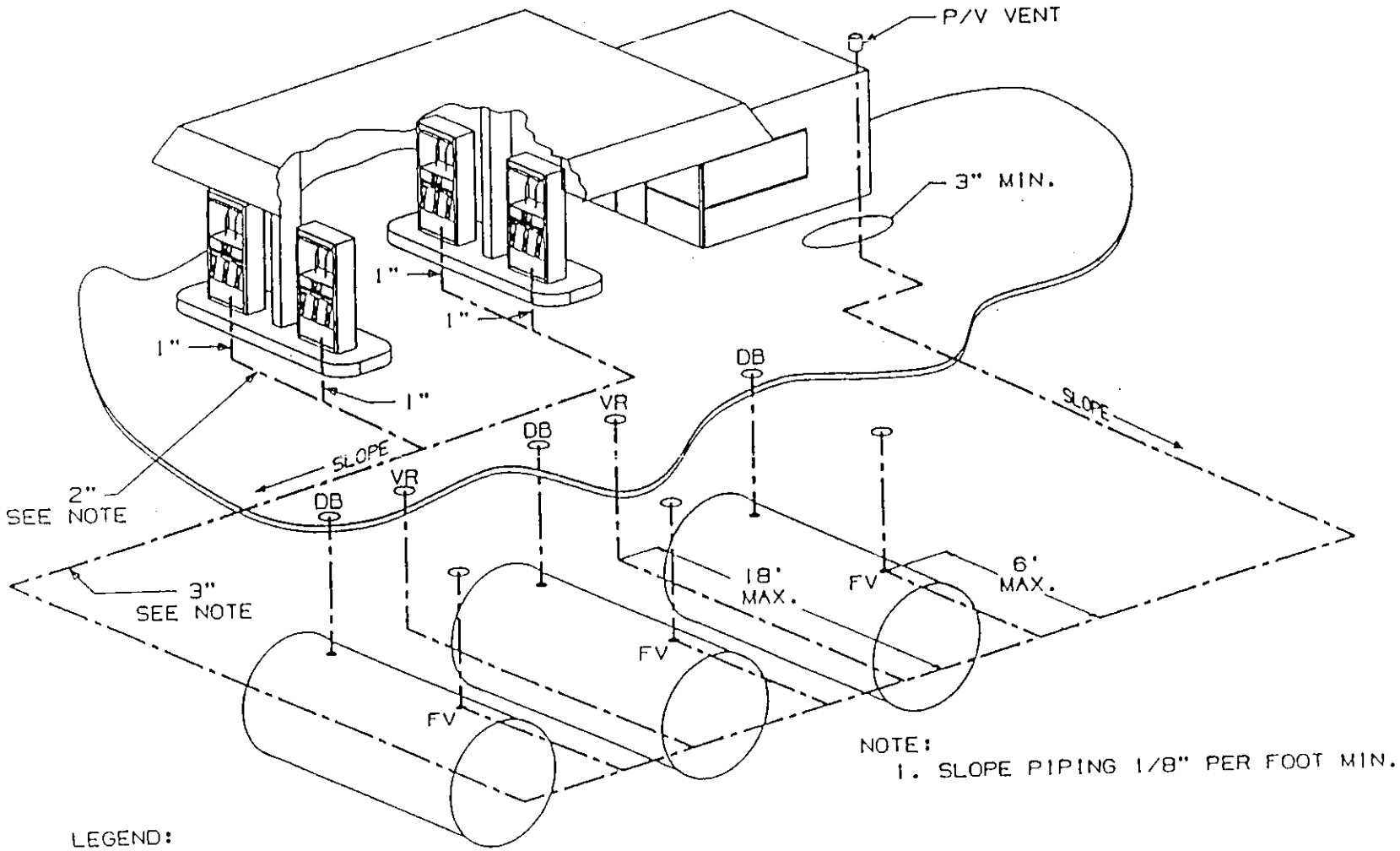

Executive Order G-70-153-AA

Exhibit 2

Figure 2A-3

Typical Installation of the
Dresser/Wayne WayneVac Phase II Vapor Recovery System
With Two-Point Phase I System

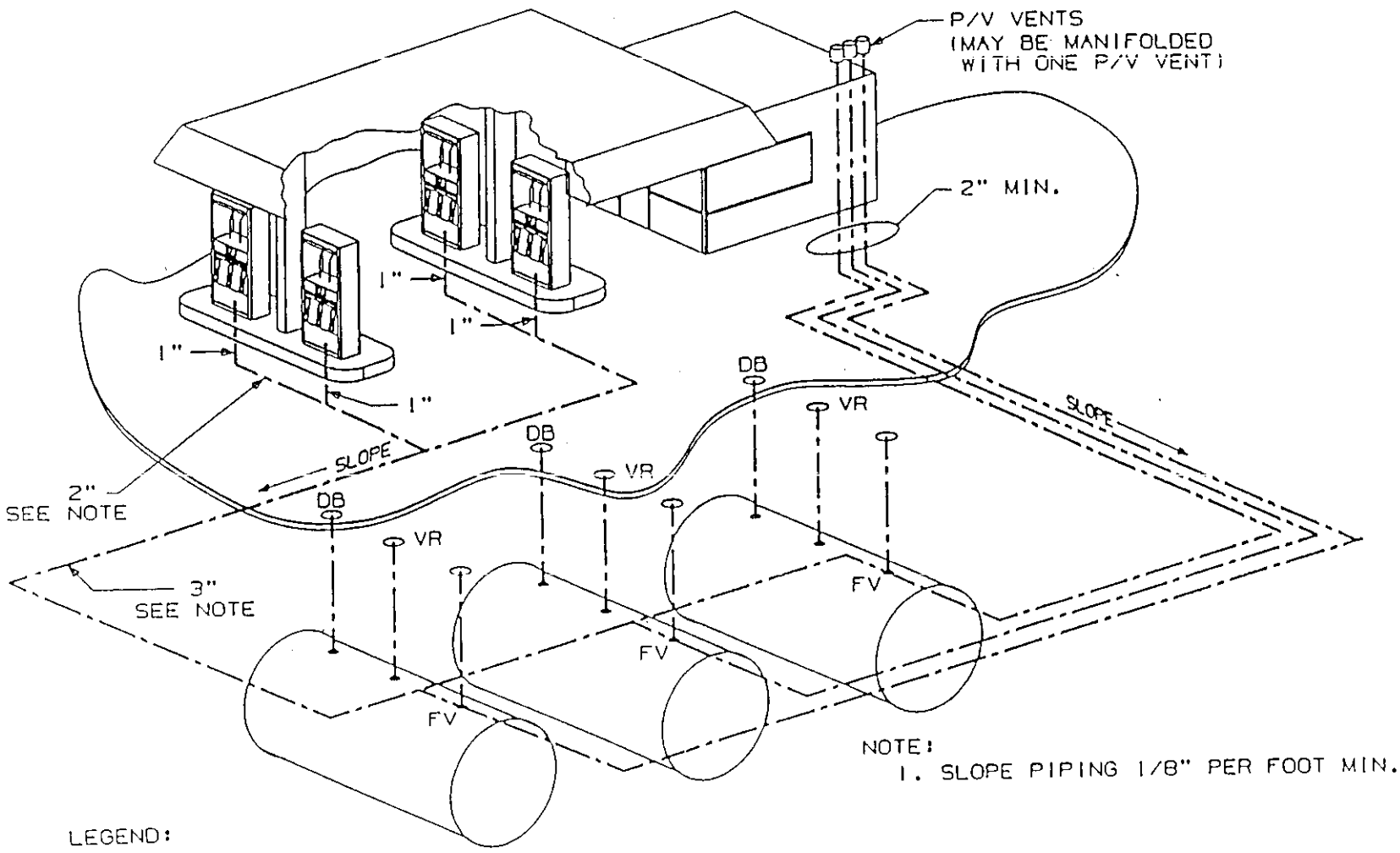

Executive Order G-70-153-AA

Exhibit 2

Figure 2A-4

Typical Installation of the
Dresser/Wayne WayneVac Phase II Vapor Recovery System
With Two-Point Phase I System

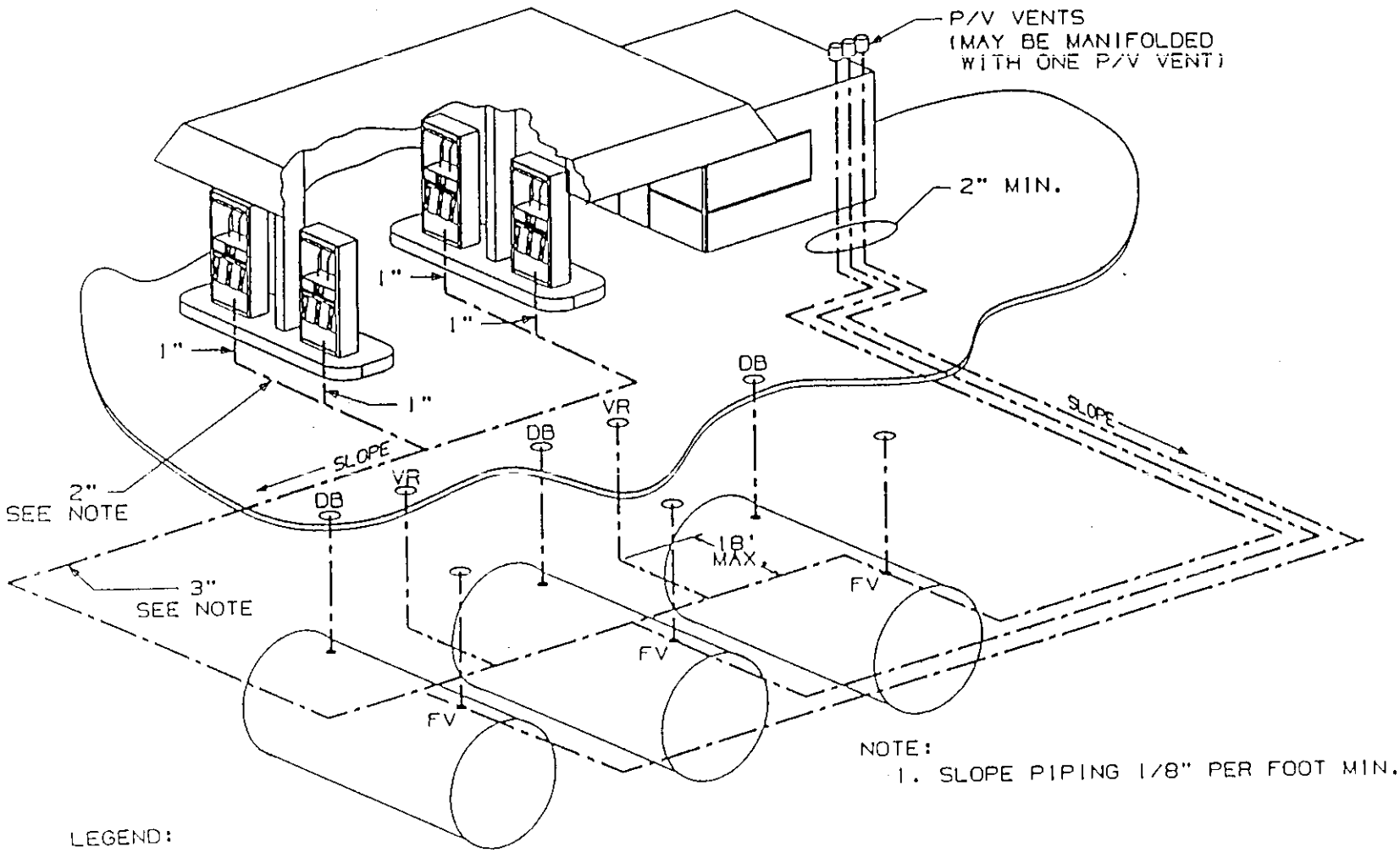

Executive Order G-70-153-AA

Exhibit 2

Figure 2B

Hose Configuration & Possibilities
For Vista and Nonvista Dispensers

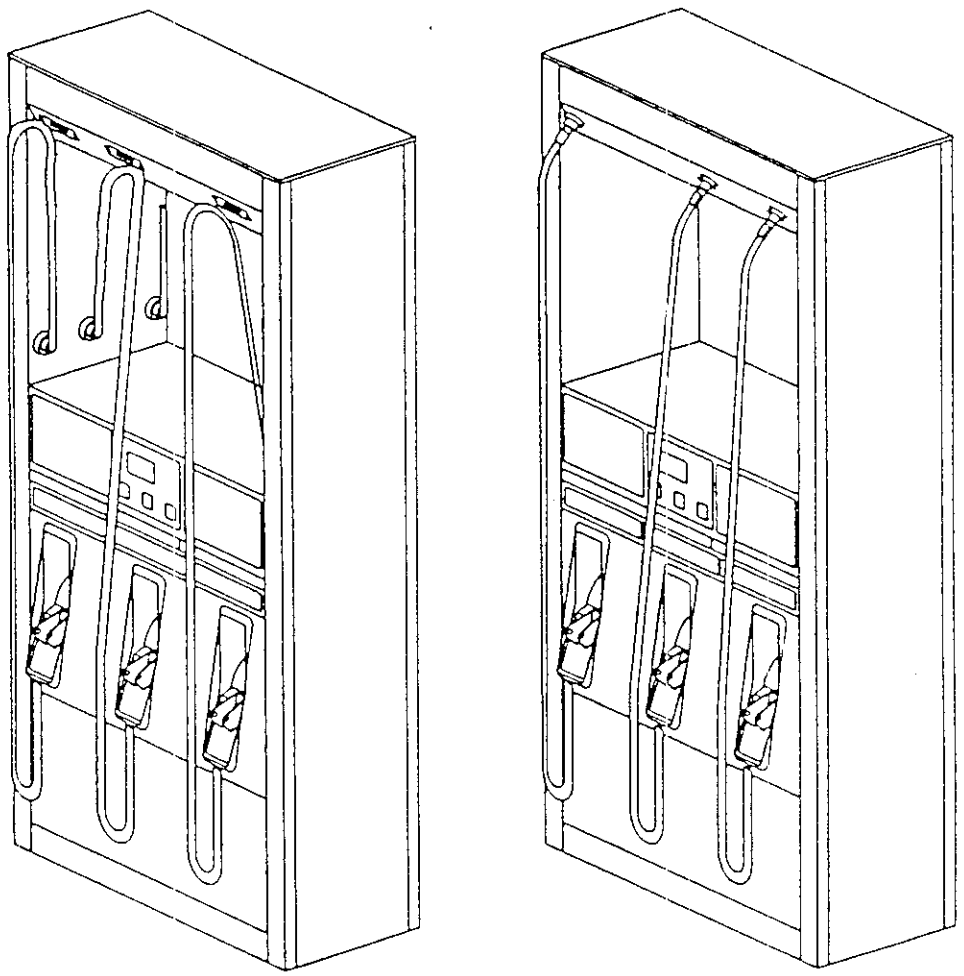

DISPENSERS CAN BE FOUR, THREE, TWO, OR ONE HOSE PER SIDE.

Executive Order G-70-153-AA

Exhibit 2

Figure 2C-1

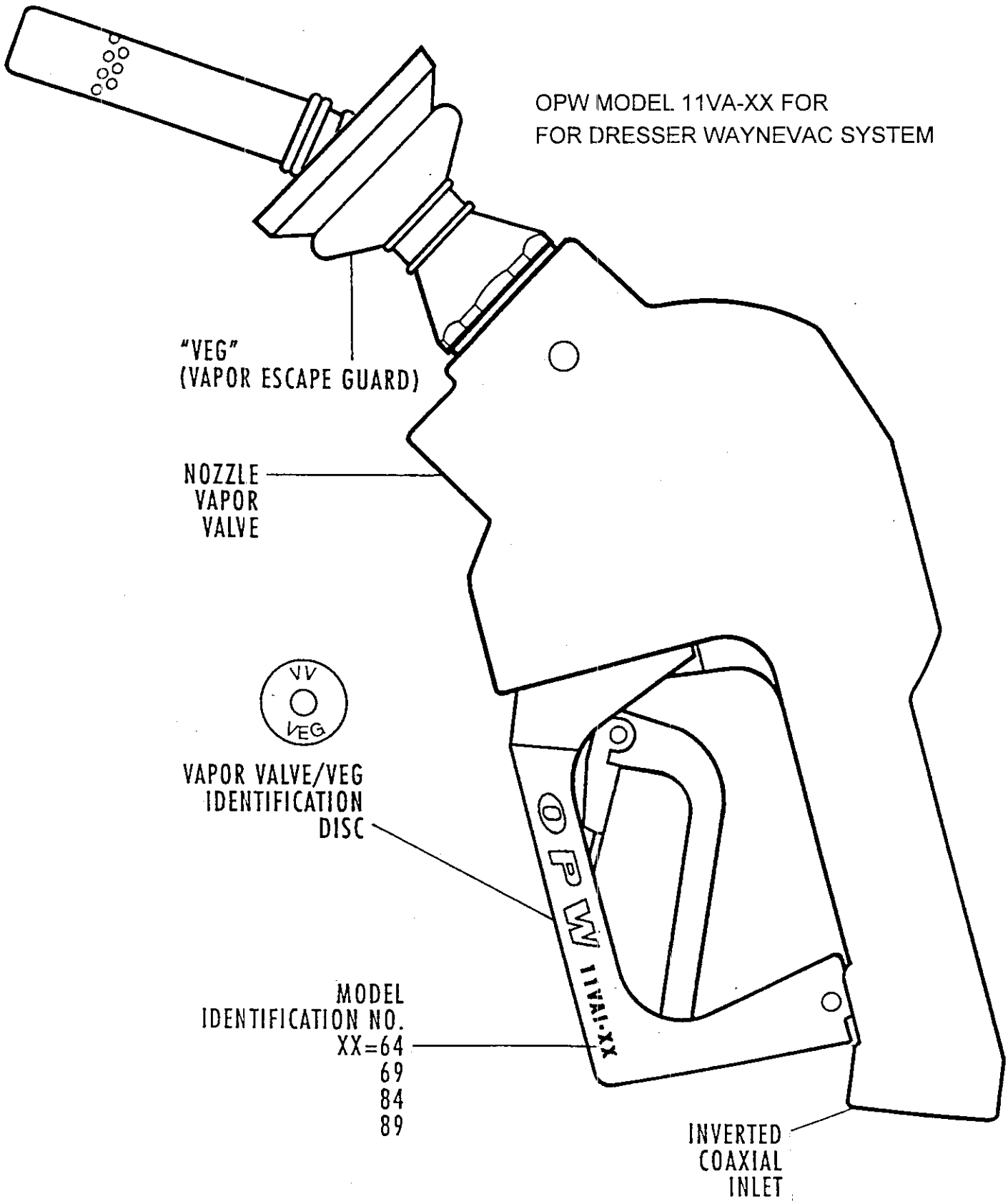

Executive Order G-70-153-AA

Exhibit 2

Figure 2C-2
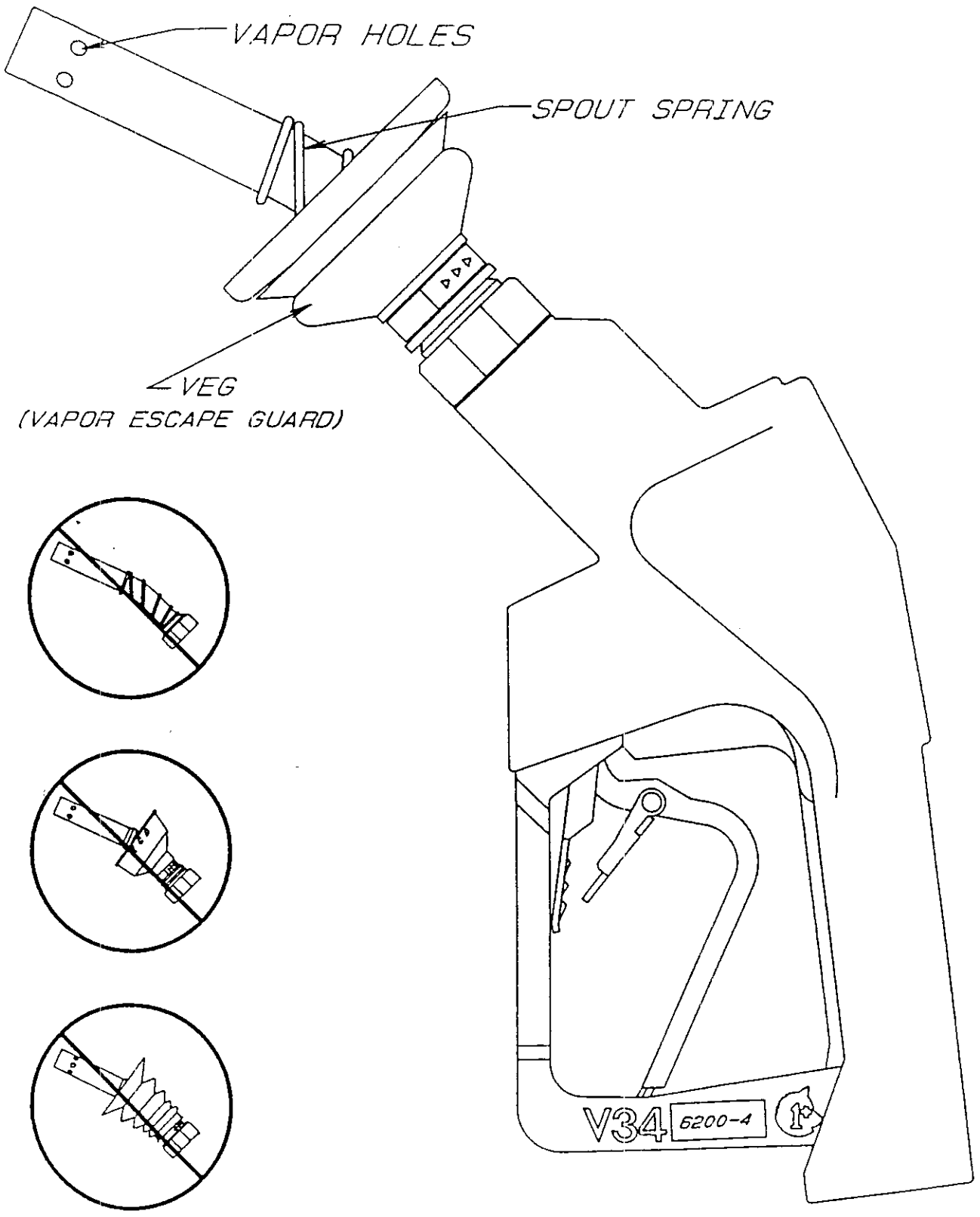
HUSKY MODEL V34 6200-4
FOR DRESSER WayneVac SYSTEM