State of California
AIR RESOURCES BOARD

Executive Order G-70-159-AB

Modification to the Certification of the Saber Nozzle for Use with Specified Phase II Vapor Recovery Systems

WHEREAS, the California Air Resources Board ("the Board" or "CARB") has established, pursuant to California Health and Safety Code sections 39600, 39601 and 41954, certification procedures for systems designed for the control of gasoline vapor emissions during motor vehicle fueling operations (Phase II vapor recovery systems) in its "Certification Procedures for Gasoline Vapor Recovery Systems at Service Stations" (the "Certification Procedures") as last amended December 4, 1981, incorporated by reference into Title 17, California Code of Regulations, Section 94001;

WHEREAS, the Board has established, pursuant to California Health and Safety Code sections 39600, 39601 and 41954, test procedures for determining the compliance of Phase II vapor recovery systems with emission standards in its "Test Procedures for Determining the Efficiency of Gasoline Vapor Recovery Systems at Service Stations" (the "Test Procedures") as last amended September 1, 1982, incorporated by reference into Title 17, California Code of Regulations, Section 94000;

WHEREAS, Saber Equipment Corporation ("Saber"), requested and was granted certification of the Saber Flow Nozzle models N11110 and N21110 ("Saber Nozzles") with the Gilbarco VaporVac Phase II vapor recovery system by Executive Order G0-70-159 on December 29, 1994, and was granted modification to the certification by Executive Order G-70-159-AA on February 1, 1995;

WHEREAS, Saber has requested modification of the certification of the Saber Nozzles to include the WayneVac Phase II vapor recovery system and additional components;

WHEREAS, the requested modifications to the certification of the Saber Nozzles have been evaluated pursuant to the Board's Certification Procedures;

WHEREAS, Section VIII-A of the Certification Procedures provides that the Executive Officer shall issue an order of certification if he or she determines that the vapor recovery system conforms to all of the requirements set forth in Sections I through VII of the Certification Procedures; and

WHEREAS, I, James D. Boyd, Air Resources Board Executive Officer, find that Saber Nozzles used in conjunction with Phase II vapor recovery systems specified herein conform with all the requirements set forth in Sections I through VII of the Certification Procedures, and result in a vapor recovery system which is at least 95 percent effective for attendant and/or self-serve use at gasoline service stations when used in conjunction with a Phase I vapor recovery system which has been certified by the Board.

NOW, THEREFORE, IT IS HEREBY ORDERED that the Saber Nozzles with the Phase II vapor recovery systems specified herein are certified to be at least 95 percent effective in attended and/or self-serve mode when used with a CARB-certified Phase I vapor recovery system. Exhibit 1 of this Order contains a list of the equipment certified for specific use with the Saber Nozzle. Exhibit 2 contains installation and performance specifications for the equipment listed in Exhibit 1. All requirements and criteria not specific to the nozzles are contained in the certification Executive Orders for the specific Phase II systems, and only the specific criteria and requirements contained in this Order supercede those in the original Orders. Fugitive emissions which may occur when the underground storage tanks are under positive pressure have not been quantified and were not included in the calculation of system effectiveness.

IT IS FURTHER ORDERED that the maximum dispensing rate for installations of the Saber Nozzle systems shall not exceed ten (10.0) gallons per minute in compliance with the limitation imposed by United States Environmental Protection Agency as specified in the Federal Register, Volume 58, Number 55, page 16019.

IT IS FURTHER ORDERED that compliance with the certification requirements and rules and regulations of the Division of Measurement Standards of the Department of Food and Agriculture, the State Fire Marshal's Office, and the Division of Occupational Safety and Health of the Department of Industrial Relations is made a condition of this certification.

IT IS FURTHER ORDERED that the following requirements are made a condition of certification. The Saber Nozzles shall be installed only in facilities which are capable of demonstrating on-going compliance with the vapor integrity requirements of the local air pollution control district ("district") with jurisdiction over the installation. The owner or operator of the installation shall conduct, and pass, a static pressure decay test at least once in each twelve month period. The test shall be conducted in accordance with the procedure contained in Exhibit 3 of this Order. Alternative test procedures may be used if determined by the Executive Officer to yield comparable results.

IT IS FURTHER ORDERED that the Saber Nozzles shall be 100 percent performance checked at the factory, including checks of the integrity of the vapor path and the proper functioning of all automatic shut-off mechanisms.

IT IS FURTHER ORDERED that the system, as installed, shall comply with the procedures and performance standards which the test installation was required to meet during certification testing. Local districts may adopt stricter procedures or performance standards in accordance with the California Health and Safety Code section 41954 (g). Failure to demonstrate compliance with district procedures or performance standards which are stricter than those imposed during certification testing does not per se constitute failure of the Saber Nozzle system to meet the terms and conditions of this Executive Order. If, in the judgment of the Executive Officer, a significant fraction of installations fail to meet the specifications of this certification, or if a significant portion of the vehicle population is found to have configurations which significantly impair the system's collection efficiency, the certification itself may be subject to modification, suspension or revocation.

IT IS FURTHER ORDERED that the certified Saber Nozzles shall, at a minimum, be operated in accordance with the manufacturer's recommended maintenance intervals and shall use the manufacturer's recommended operation, installation, and maintenance procedures.

IT IS FURTHER ORDERED that the certified Saber Nozzles shall, at a minimum, be operated in accordance with the manufacturer's recommended maintenance intervals and shall use the manufacturer's recommended operation, installation, and maintenance procedures.
IT IS FURTHER ORDERED that the certified Saber Nozzles shall be performance tested during installation for ability to dispense gasoline and collect vapors without difficulty in the presence of the station operator, owner or designee. The station operator, owner or designee shall be provided with copies of the installation and maintenance manuals for the Saber Nozzles, to be maintained at the station, and shall also be provided with instructions in the proper use of the Saber Nozzles, their repair and maintenance, where and how system and/or component replacements can be readily obtained.

IT IS FURTHER ORDERED that the certified Saber Nozzles shall be warranted in writing, for at least one year, to the ultimate purchaser and each subsequent purchaser, that the vapor recovery system is designed, built and equipped so as to conform at the time of original installation or sale with the applicable regulations and is free from defects in materials and workmanship which would cause the vapor recovery system to fail to conform with applicable regulations. Copies of the manufacturer's warranty for the Saber Nozzles shall be made available to the station manager, owner or operator.

IT IS FURTHER ORDERED that any alteration of the equipment, parts, design, or operation of the systems certified hereby is prohibited, and deemed inconsistent with this certification, unless such alteration has been approved by the Executive Officer or his/her designee.

IT IS FURTHER ORDERED that the Saber Nozzle system certification Executive Order G-70-159-AA, issued February 1, 1995, is hereby superceded by this Executive Order.

Executed at Sacramento, California, this 17 day of July, 1995.

James D. Boyd
Executive Officer

Attachments

Executive Order G-70-159-AB

Exhibit 1
Equipment List

Component	Manufacturer/Model	State Fire Marshal Identification Number
Nozzle	Saber Flow Nozzles with Fill Guard* (not optional) N11110 (straight spout), N12110 (bent spout) OPW Turbo 1.0 (bent spout)	005:051:001
	Saber Display Nozzles with Fill Guard* (not optional) N21110 (straight spout), N22110 (bent spout) OPW Turbo 1.5 (bent spout)	005:051:001
	* Fill Guard - see Figure 2-A	
	NOTE: The OPW Turbo 1.0 is identical to the Saber Flow N12110 nozzle, and the Turbo 1.5 is identical to the Saber Display N22110 nozzle. All References to the Saber nozzles also apply to the OPW equivalents.	
Inverted Coaxial Hose	Saber H1Axxx, H2Axxx xxx = 085, 090, 095, 100, 105, 110, 115, 120, 125, 130, 135, 140, 145, 150	005:051:001
	Saber H1Bxxx, H2Bxxx xxx = 085, 090, 095, 100, 105, 110, 115, 120, 125, 130, 135, 140, 145, 150	005:051:001
	Saber H1Cxxx, H2Cxxx xxx = 085, 090, 095, 100, 105, 110, 115, 120, 125, 130, 135, 140, 145, 150	005:051:001
	Note: "xxx" divided by 10 represents hose length in feet.	
Phase I Fill Adaptors	Any CARB-certified rotatable Phase I product adaptor such as the OPW 61SA.	
	Note: For systems installed before two CARB-certified rotatable Phase I product adaptors are available, or within sixty days after that date, any CARB-certified Phase I product adaptor may be used for a period not to exceed four years from the date the second rotatable Phase I product adaptor was certified. , Local districts may require earlier replacement of the standard Phase I product adaptors.	

Saber Nozzles with Gilbarco VaporVac System

Refer to the appropriate revision of Executive Order G-70-150 Exhibit 1 for a list of certified dispensers, dispenser retrofit kits, VaporVac system components, underground piping configurations and Phase I equipment and system requirements. Additional requirements for the Saber/VaporVac system are listed below.

Component	State Fire Marshall Identification
Power Supply P11000 1.0 Power Supply, 120 V	005:051:001
Electrical Adapter A02200	005:051:001
AC Cable Z00002	005:051:001
DC Cable D00212 Note: to be used with the CARB-certified Gilbarco Advantage single hose (1 side) or two hose (2 side) dispensers listed in the most current revision of G-70-150.	005:051:001
DC Cable D00213 Note: to be used with CARB-certified Gilbarco Advantage and MPD (1 side) dispensers listed in the most current revision of G-70-150.	005:051:001
DC Cable D00216 Note: to be used with CARB certified Gilbarco Advantage and MPD (2 sides) dispensers listed in the most current revision of G-70-150.	005:051:001
Communications Adaptor (display nozzle only) C20000	005:051:001
Communications Harness (display nozzle only) C22010 (display), C22020 (boot switch)	005:051:001

Saber Nozzles with WayneVac System

Refer to the appropriate revision of Executive Order G-70-153 Exhibit 1 for a list of certified dispensers, dispenser retrofit kits, WayneVac system components, underground piping configurations and Phase I equipment and system requirements . Additional requirements for the Saber/WayneVac system are listed below.

Component	State Fire Marshall Identification
Power Supply P11000 1.0 Power Supply, 120 V	005:051:001
Vapor Valve A02100	005:051:001
AC Cable Z00001	005:051:001
DC Cable D00212 (high hose), D00412 (side hose) Note: to be used with the CARB-certified Wayne Vista and DL390 single hose (1 side) or two hose (2 side) dispensers listed in the most current revision of G-70-153.	005:051:001
DC Cable D00213 (high hose), D00413 (side hose) Note: to be used with CARB-certified Wayne Vista and DL390 (1 side) dispensers listed in the most current revision of G-70-153.	005:051:001
DC Cable D00216 (high hose), D00416 (side hose) Note: to be used with CARB certified Wayne Vista and DL390 (2 sides) dispensers listed in the most current revision of G-70-153.	005:051:001
Communications Adaptor (display nozzle only) C20000	005:051:001
Communications Harness (display nozzle only) C24002 (2 hose), C24006 (6 hose)	005:051:001

Executive Order G-70-159-AB

Exhibit 2

Specifications for the Saber Nozzle

Figure 2A depicts the Saber nozzle. Figure 2B depicts a typical installation of the Saber Nozzle with the Gilbarco VaporVac System. Figure 2C depicts a typical installation of the Saber Nozzle with the WayneVac System.

Nozzles

1. A Fill Guard shall be installed on the nozzle at the base of the spout, as shown in Figure 2A. Any nozzle with a Fill Guard which is missing is defective and shall be immediately removed from service. Any nozzle on the Gilbarco systems with a Fill Guard which is damaged such that at least one-fourth (1/4) of the outer edge of the Guard is missing, or which has cumulative damage equivalent to at least 1/4 of the outer edge missing, is defective and shall be immediately removed from service.

2. The Saber Nozzle has a total of 14 holes, which are arranged in pairs with two holes per vapor passage, or slot. Failure mode testing demonstrated that blockage of some of the vapor collection holes in the spout has negligible effect on the operation of the system until the number of unblocked holes is less than are required below.

System	Minimum Number of Unblocked Vapor Holes Required
Gilbarco VaporVac	4
WayneVac	2

   Any Saber nozzle which is found to have fewer unobstructed vapor collection holes than are required is defective and shall be immediately removed from service.

3. Nozzles shall be 100 percent performance checked at the factory, including pressure versus flow characteristics of the vapor path and checks of all shutoff mechanisms.

Vapor Valves

1. The VaporVac system is equipped with solenoid vapor valves inside the dispenser. The WayneVac system is equipped with a vapor valve mounted in the hose at the top of the dispenser. The maximum allowable leak rate for new vapor valves shall not exceed the following:

   0.038 CFH at a pressure of two inches water column (2" wc), and
   0.005 CFH at a vacuum of twenty seven inches water column (approx 1 psi).

2. The vapor valve ensures proper operation of the system and prevents the ingestion of air into the system. Any defective vapor valve shall be immediately removed from service. The integrity of the system shall be restored by replacing the vapor valve or otherwise closing the vapor path as soon as practicable.

3. No sealing of the vapor holes on the nozzle spout (such as placing a balloon or the fingers of a glove over the holes on the nozzle spout, or bagging nozzles) is permitted during static pressure decay tests.

Inverted Coaxial Hoses

1. The length of hose which may be in contact with the island and/or ground when the nozzle is properly mounted on the dispenser is limited to six inches (6").

2. The hose configuration shall comply with the current revision of Executive Order G-70-150 or G-70-153 Figure 2B; there may be 1 to 4 hoses on each side of the dispenser. Within the constraints of the configurations, the maximum allowable length of the hose shall be fifteen feet (15').

Breakaway Couplings

The breakaway coupling is an integral part of the Saber Nozzle located at the base of the spout (see Figure 2A). The installation of any additional breakaway in the hose path is prohibited.

Saber Nozzle System

1. The normal operating range of the system, as measured by air-to-liquid (A/L) ratio testing, is 0.90 plus or minus 0.10 (0.80 to 1.00). The A/L ratio of the system shall be measured at a flowrate between six and ten gallons per minute (6 - 10 gpm). Any fueling point not capable of demonstrating compliance with this performance standard shall be deemed defective and removed from service. The A/L ratio shall be determined by a test procedure which has been adopted by CARB or by a local district. (Draft procedure TP-201.5 may be used until an A/L ratio test procedure is adopted by the Board.) Alternative test procedures may be used if they are determined by the Executive Officer to yield comparable results.

   NOTES:
   One gallon of fuel was dispensed from each nozzle on the WayneVac system prior to the first A/L test to minimize inconsistent test results which may otherwise occur on the first test of a nozzle. This procedure may also be used with the Gilbarco VaporVac system.

   This test procedure returns air rather than vapor to the storage tank, and normally causes an increase in storage tank pressure which may result in vent emissions. This is a temporary condition due to the test and should not be considered an indication of malfunction or noncompliance.

Executive Order G-70-159-AB
Figure 2A
Saber Nozzle

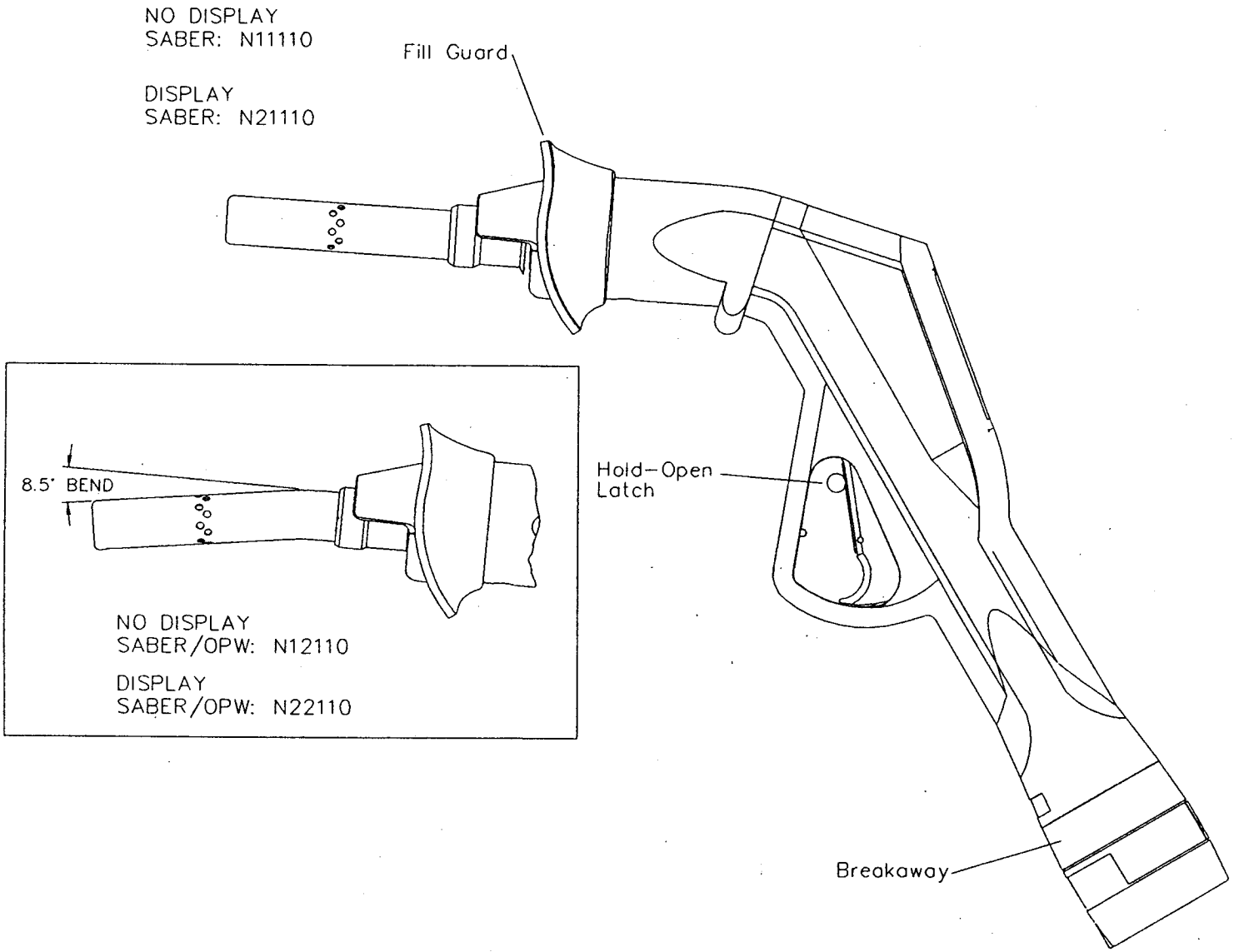

Executive Order G-70-159-AB

Figure 2B

Approved Equipment For Saber/Gilbarco System

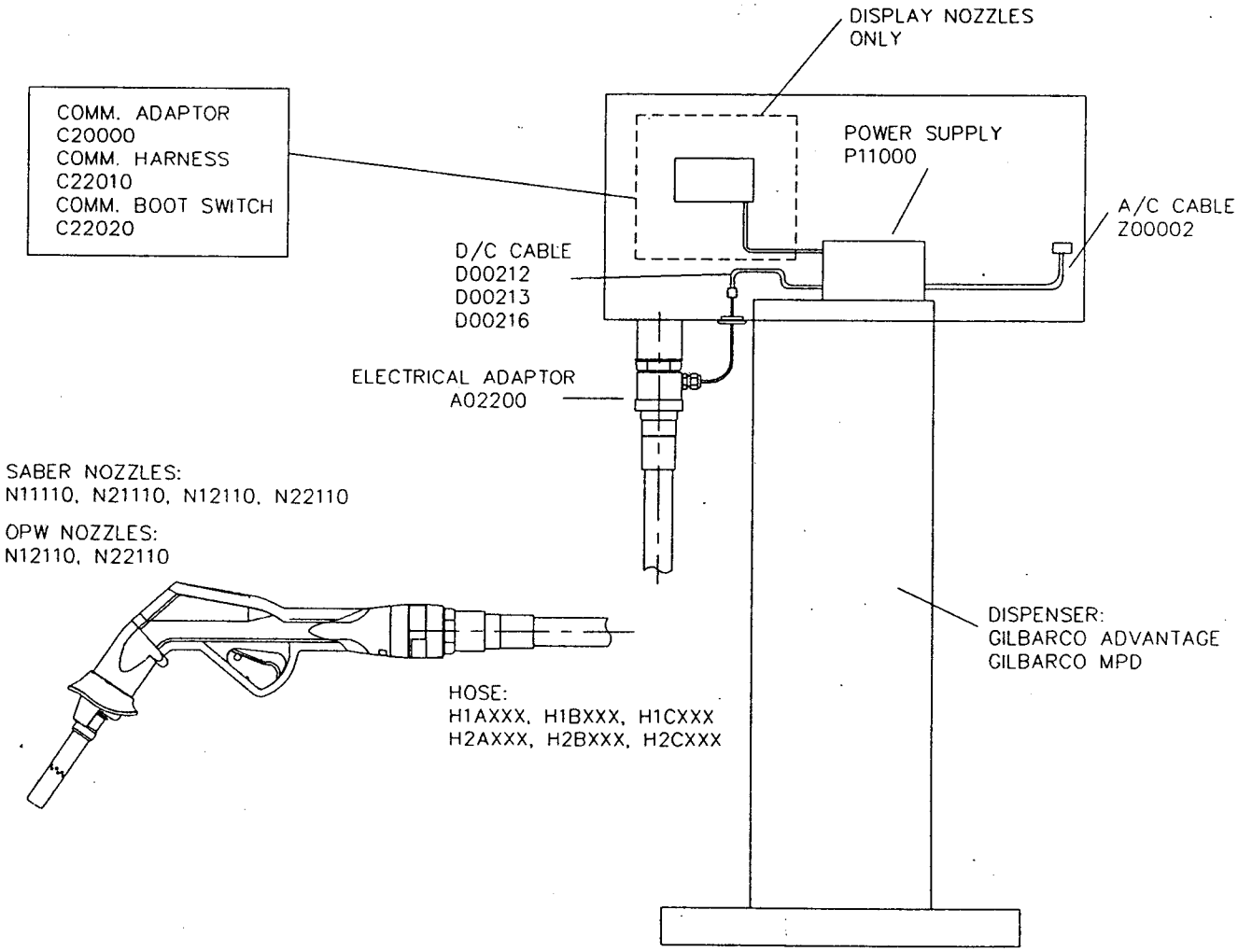

Executive Order G-70-159-AB

Figure 2C

Approved Equipment For Saber/WayneVac System

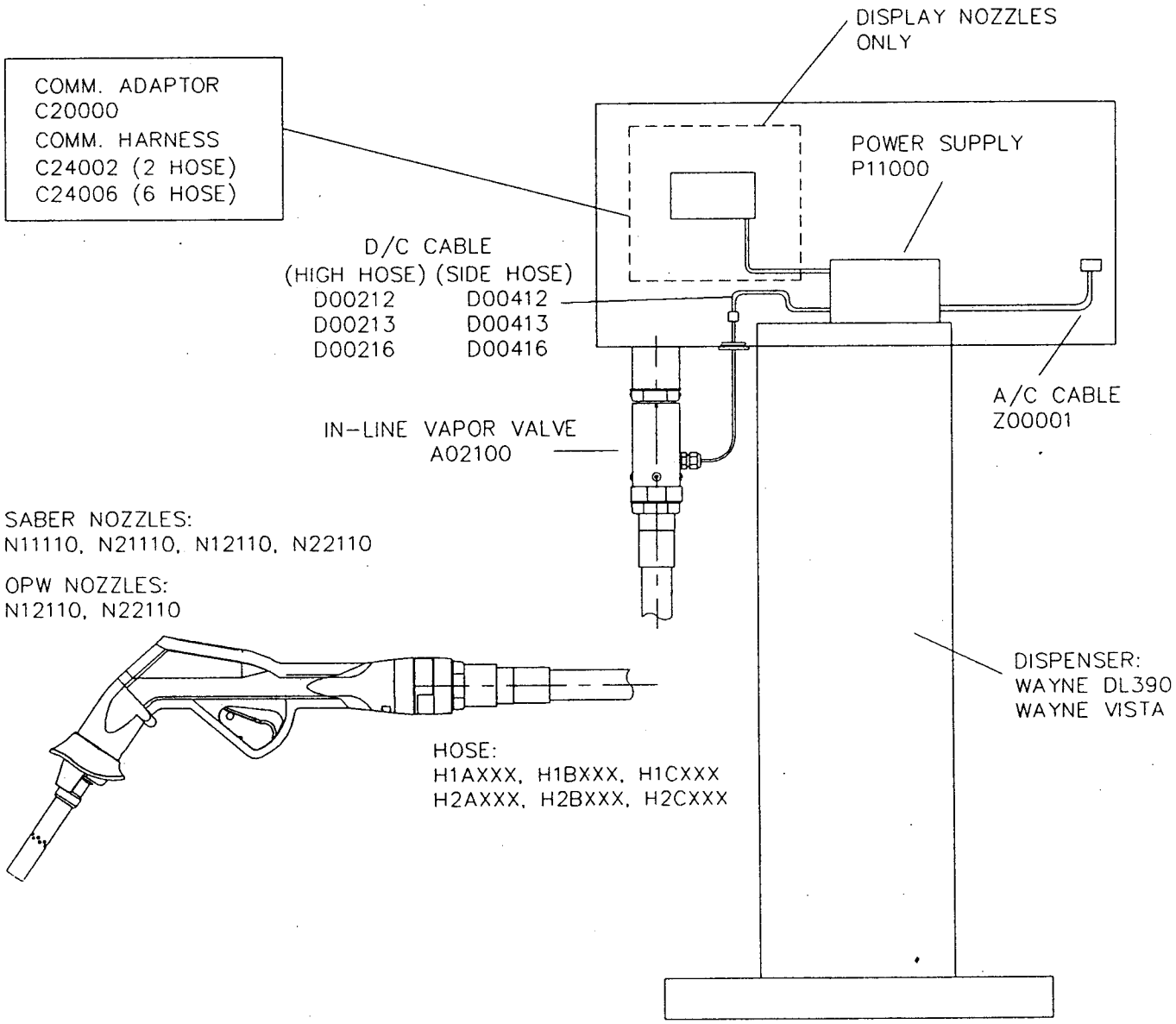

Executive Order G-70-159-AB

Saber Nozzle for Use with
Specified Phase II Vapor Recovery Systems

Exhibit 3

STATIC PRESSURE INTEGRITY TEST UNDERGROUND STORAGE TANKS*

1. Applicability

1.1 This test procedure is used to quantify the vapor tightness of vapor recovery systems installed at any gasoline dispensing facility (GDF) equipped with pressure/vacuum (P/V) valves with designed pressure settings specified in Exhibit 1 of this Order. Excessive leaks in the vapor recovery system will increase the quantity of fugitive hydrocarbon emissions and lower the overall efficiencies of both the Phase I and Phase II vapor recovery systems.

2. Principle

2.1 The entire vapor recovery system is pressurized with nitrogen to two (2.0) inches H_2O. The system pressure is then allowed to decay and the pressure after five (5) minutes is compared with an allowable value. The minimum allowable five-minute final pressure is based on the system ullage and pressure decay equations. For the purpose of compliance determination, this test shall be conducted after all back-filling, paving, and installation of all Phase I and Phase II components, including P/V valves, has been completed.

2.2 For GDF equipped with a coaxial Phase I system this test shall be conducted at a Phase II vapor riser. For GDF which utilize a two-point Phase I system this test may be conducted at either a Phase II riser or a Phase I vapor coupler, provided that the criteria set forth in Section 6.8 have been met. If the integrity criteria for two-point systems specified in Section 6.8 are met, it is recommended that this test be conducted at the Phase I vapor coupler.

3. Range

3.1 If mechanical pressure gauges are employed, the full-scale range of the pressure gauges shall be 0-2.0, 0-1.0, and 0-0.50 inches H_2O column. Maximum incremental graduations of the pressure gauge shall be 0.05 inches H_2O and the minimum accuracy of the gauge shall be three percent of full scale. The minimum diameter of the pressure gauge face shall be 4 inches.

***Reference Bay Area Air Quality Management District Source Test Procedure ST-30**

3.2 If an electronic pressure measuring device is used, the full-scale range of the device shall not exceed 0-10 inches H_2O with a minimum accuracy of 0.5 percent of full-scale. A 0-20 inches H_2O device may be used, provided the equivalent accuracy is not less than 0.25 percent of full scale.

3.3 The minimum and maximum total ullages shall be 500 and 25,000 gallons, respectively. These values are exclusive of all vapor piping volumes.

3.4 The minimum and maximum nitrogen feed-rates, into the system, shall be one (1) and five (5) CFM, respectively.

4. Interferences

4.1 Introduction of nitrogen into the system at flowrates exceeding five (5.0) CFM may bias the results of the test toward non-compliance. Only gaseous nitrogen shall be used to conduct this test. Air, liquified nitrogen, helium, or any gas other than nitrogen **shall not be used** for this test procedure.

4.2 The results of this Static Pressure Integrity Test shall not be used to verify compliance if an Air to Liquid Volumetric Ratio Test (Test Procedure TP-201.5) was conducted within the twenty-four (24) hours prior to this test.

5. Apparatus

5.1 Nitrogen. Use commercial grade nitrogen in a high pressure cylinder, equipped with a two-stage pressure regulator and a one psig pressure relief valve.

5.2 Pressure Measuring Device. Use 0-2.0, 0-1.0, and 0-0.50 inches H_2O pressure gauges connected in parallel, a 0-2 inches H_2O manometer, or an electronic pressure measuring device to monitor the pressure decay in the vapor recovery system. The pressure measuring device shall, at a minimum, be readable to the 0.05 inches H_2O.

5.3 "T" Connector Assembly. See Figure 3-1 for example.

5.4 Vapor Coupler Integrity Assembly. Assemble OPW 633-A, 633-B, and 634-A adapters, or equivalent, as shown in Figure 3-2. If the test is to be conducted at the storage tank Phase I vapor coupler, this assembly shall be used prior to conducting the static leak test in order to verify the pressure integrity of the vapor poppet. The internal volume of this assembly shall not exceed 0.1 cubic feet.

5.5 Vapor Coupler Test Assembly. Use a compatible OPW 634-B cap, or equivalent, equipped with a center probe to open the poppet, a pressure measuring device to monitor the pressure decay, and a connection for the introduction of nitrogen into the system. See Figure 3-3 for example.

5.6 Stopwatch. Use a stopwatch accurate to within 0.2 seconds.

Figure 3-1

"T" Connector Assembly

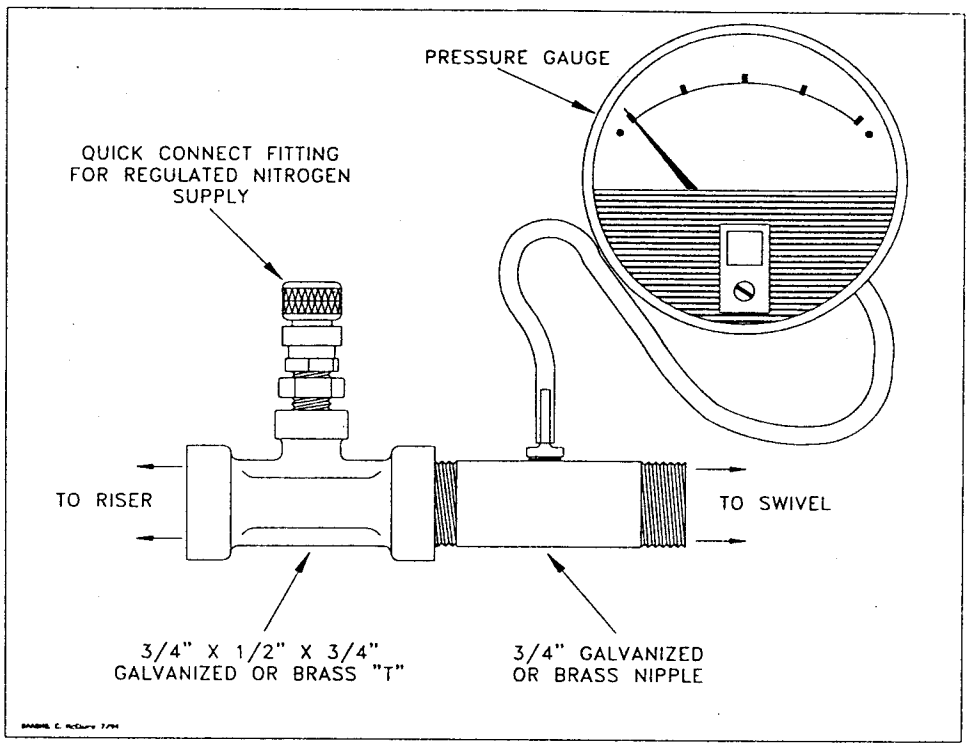

Figure 3-2

Vapor Coupler Integrity Assembly

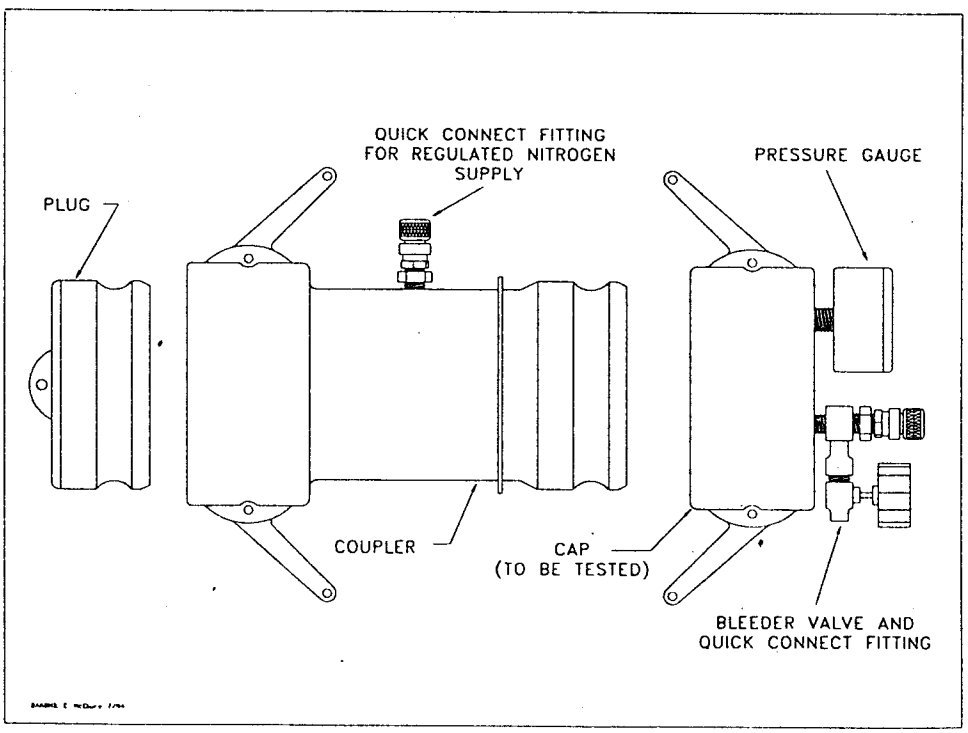

Figure 3-3

Vapor Coupler Test Assembly

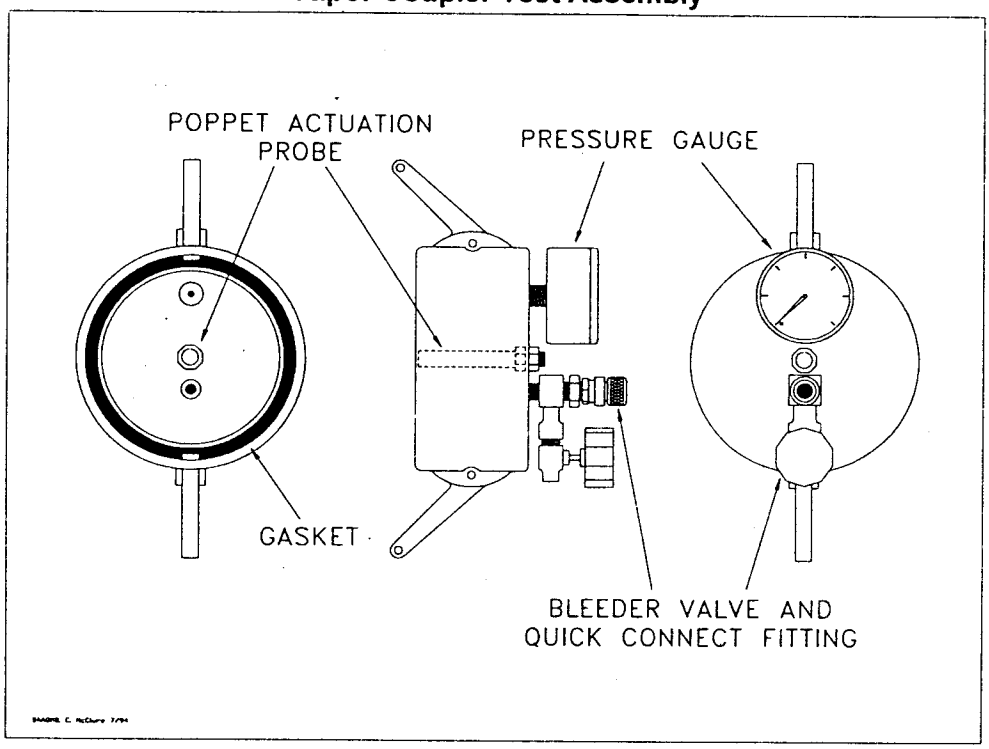

5.7 Flowmeter. Use a Dwyer flowmeter, Model RMC-104, or equivalent, to determine the required pressure setting of the delivery pressure gauge on the nitrogen supply pressure regulator. This pressure shall be set such that the nitrogen flowrate is between 1.0 and 5.0 CFM.

5.8 Combustible Gas Detector. A Bacharach Instrument Company, Model 0023-7356, or equivalent, may be used to verify the pressure integrity of system components during this test.

5.9 Leak Detection Solution. Any liquid solution designed to detect vapor leaks may be used to verify the pressure integrity of system components during this test.

6. Pre-Test Procedures

6.1 The following safety precautions shall be followed:

6.1.1 Only nitrogen shall be used to pressurize the system.

6.1.2 A one psig relief valve shall be installed to prevent the possible over-pressurizing of the storage tank.

6.1.3 A ground strap should be employed during the introduction of nitrogen into the system.

6.2 Failure to adhere to any or all of the following time and activity restrictions shall invalidate the test results:

6.2.1 There shall be no Phase I bulk product deliveries into or out of the storage tank(s) within the three (3) hours prior to the test or during performance of this test procedure .

6.2.2 There shall be no product dispensing within thirty (30) minutes prior to the test or during performance of this test procedure.

6.2.3 Upon commencement of the thirty minute "no dispensing" portion of this procedure, the headspace pressure in the tank shall be measured. If the pressure exceeds 0.50 inches H_2O, the pressure shall be carefully relieved in accordance with all applicable safety requirements. After the thirty minute "no dispensing" portion of this procedure, and prior to introduction of nitrogen, the headspace pressure shall again be lowered, if necessary, to less than 0.50 inches H_2O.

6.2.4 There shall be no Air to Liquid Volumetric Ratio Test (Test Procedure TP-201.5) conducted within the twenty-four (24) hour period immediately prior to this test.

6.3 Measure the gallons of gasoline present in each underground storage tank and determine the actual capacity of each storage tank from facility records. Calculate the ullage space for each tank by subtracting the gasoline gallonage present from the actual tank capacity. The minimum ullage during the test shall be 25 percent of the tank capacity or 500 gallons, whichever is greater. The total ullage shall not exceed 25,000 gallons.

6.4 For two-point Phase I systems, this test shall be conducted with the dust cap removed from the vapor coupler. This is necessary to determine the vapor tightness of the Phase I vapor poppet. See Section 6.7 if this test is to be conducted at the Phase I vapor coupler.

6.4.1 For coaxial Phase I systems this test shall be conducted with the dust cap removed from the Phase I coupler. This is necessary to insure the vapor tightness of the Phase I vapor poppet.

6.4.2 Verify that the liquid level in the storage tank is at least four (4) inches above the highest opening at the bottom of the submerged drop tube.

6.5 If the Phase I containment box is equipped with a drain valve, the valve assembly may be cleaned and lubricated prior to the test. This test shall, however, be conducted with the drain valve installed and the manhole cover removed. See subsection 7.4.1 for further details regarding containment box drain valves.

6.6 If the test is to be conducted at a Phase II vapor riser, disconnect the dispenser end of one vapor recovery hose and install the "T" connector assembly (see Figure 3-1). Connect the nitrogen gas supply (do not use air) and the pressure measuring device to the "T" connector.

6.6.1 For those Phase II systems utilizing a dispenser mounted remote vapor check valve, the "T" connector assembly shall be installed on the vapor riser side of the check valve.

6.7 If this test is to be conducted at the Phase I vapor coupler on a two-point Phase I system, the procedures set forth in subsections 6.7.1 and 6.7.2 shall be successfully completed prior to testing. The static pressure integrity test shall not be conducted at the Phase I coupler at facilities equipped with coaxial Phase I systems.

6.7.1 Connect the Vapor Coupler Integrity Assembly to the Phase I vapor coupler. Connect the Vapor Coupler Test Assembly. Connect the nitrogen supply to the assembly and carefully pressurize the internal volume of the assembly to two (2.0) inches H_2O. Start the stopwatch. Record the final pressure after one minute.

6.7.2 If the pressure after one minute is less than 0.25 inches H_2O, the leak rate through the Phase I vapor poppet precludes conducting the static leak test at this location. If the pressure after one minute is greater than or equal to 0.25 inches H_2O, the static leak test may be conducted at this location. This criteria assures a maximum leak rate through the Phase I vapor poppet of less than 0.0004 cubic feet per minute.

6.7.3 Disconnect the Vapor Coupler Integrity Assembly from the Phase I vapor coupler. If the requirements of subsection 6.7.2 were met, install the Vapor Coupler Test Assembly to the Phase I vapor coupler.

6.7.4 As an alternate to the requirements of subsections 6.7.1 through 6.7.3, leak detection solution may be used to verify the absence of vapor leaks through the Phase I vapor poppet on two-point Phase I systems. This alternative leak check is valid only for two-point Phase I systems in which tanks are manifolded. The manifold may be at the vent pipes. Pressurize the system to two (2) inches H_2O and use the leak detection solution to verify a zero leak (absence of bubbles) condition at one of the vapor poppets on the Phase I system.

6.8 All pressure measuring device(s) shall be bench calibrated using either a reference gauge or incline manometer. Calibration shall be performed at 20, 50, and 80 percent of full scale. Accuracy shall be within two percent at each of these calibration points. Calibrations shall be conducted on a frequency not to exceed 90 days.

6.9 Use the flowmeter to determine the nitrogen regulator delivery pressures which correspond to nitrogen flowrates of 1.0 and 5.0 CFM. These pressures define the allowable range of delivery pressures acceptable for this test procedure. Also record which regulator delivery pressure setting, and the corresponding nitrogen flowrate, will be used during the test. As an alternative, the flowmeter may be connected, in-line between the nitrogen supply regulator and Vapor Coupler Test Assembly, during the test.

6.10 Use Equation 9.2 to calculate the approximate time required to pressurize the system ullage to the initial starting pressure of two (2.00) inches H_2O. This will allow the tester to minimize the quantity of nitrogen introduced into those systems which cannot comply with the static leak standards.

6.11 Attach the Vapor Coupler Test assembly to the Phase I poppet or the "T" connector assembly to the Phase II vapor riser. Read the initial pressure of the storage tank and underground piping. If the initial pressure is greater than 0.5 inches H_2O, carefully bleed off the pressure, in accordance with all applicable safety procedures, in the storage tank and underground piping to less than 0.5 inches H_2O column.

7. Testing

7.1 Open the nitrogen gas supply valve and set the regulator delivery pressure within the allowable range determined in Section 6.9, and start the stopwatch. Pressurize the vapor system (or subsystem for individual vapor return line systems) to **approximately 2.2 ± 0.1 inches H_2O** initial pressure. It is critical to maintain the nitrogen flow until the pressure stabilizes, indicating temperature and vapor pressure stabilization in the tanks. Check the test equipment using leak detecting solution or a combustible gas detector to verify that all test equipment is leak tight.

7.1.1 If the time required to achieve the initial pressure of two (2.00) inches H_2O exceeds twice the time derived from Equation 9.2, stop the test and use liquid leak detector, or a combustible gas detector, to find the leak(s) in the system. Failure to achieve the initial starting pressure within twice the time derived from Equation 9.2 demonstrates the inability of the system to meet the performance criteria. Repair or replace the faulty component(s) and restart the test pursuant to Section 7.1.

7.2 Close and disconnect the nitrogen supply. Start the stopwatch when the pressure has decreased to the initial starting pressure of two (2.00) inches H_2O. If the pressure does not decay to 2.00 inches H_2O within five minutes, use the bleeder valve on the vapor coupler test assembly to reduce the pressure to 2.00 inches H_2O.

7.3 At one-minute intervals during the test, record the system pressure. After five minutes, record the final system pressure. See Table 3-I (or Equation 9.1) to determine the acceptability of the final system static pressure results. For intermediate values of ullage in Tables 3-I, linear interpolation may be employed.

7.4 If the system failed to meet the criteria set forth in Table 3-I (or Equation 9-2), repressurize the system and check all accessible vapor connections using leak detector solution or a combustible gas detector. There should be no leaks whatsoever (absence of bubbles using leak detector solution) from any threaded fitting at the facility. If vapor leaks in the system are encountered, repair or replace the defective component and repeat the test starting with Section 6.11. Potential sources of leaks include nozzle check valves, pressure/vacuum relief valves, containment box drain valve assemblies, and plumbing connections at the risers.

7.4.1 If the facility fails to comply with the static leak test standards and the Phase I system utilizes a non-CARB-certified drain valve equipped containment box, which was installed prior to July 1, 1992, for which a CARB-certified replacement drain valve assembly is not marketed, the following two subsections shall apply:

7.4.1.1 The drain valve may be removed and the port plugged. Reset the system. If the facility complies with the static leak test standards under these conditions, the facility shall be considered complying with the requirements, provided that the manufacturer and model number of the containment box and the date of installation are submitted with the test results.

7.4.1.2 The criteria set forth in subsection 7.4.1.1 shall not apply after July 1, 1996.

7.5 After the remaining system pressure has been relieved, remove the "T" connector assembly and reconnect the vapor recovery hose, if applicable.

7.6 If the vapor recovery system utilizes individual vapor return lines, repeat the leak test for each gasoline grade. Avoid leaving any vapor return line open longer than is necessary to install or remove the "T" connector assembly.

7.7 If the applicable CARB Executive requires the test to be conducted with and without the containment box cover in place, repeat the test with the cover in place. In these cases clearly specify, on Form 3-1, which results represent the pressure integrity with and without the cover in place.

8. Post-Test Procedures

8.1 Use Table 3-I, or Equation 9.1, to determine the compliance status of the facility by comparing the final five-minute pressure with the minimum allowable final pressure.

9. Calculations

9.1 The minimum allowable five-minute final pressure, with an initial pressure of two (2.00) inches H_2O, shall be calculated as follows:

[Equation 9-1]

$$P_f = 2e^{\frac{-500.887}{V}} \quad \text{if N = 1-6}$$

$$P_f = 2e^{\frac{-531.614}{V}} \quad \text{if N = 7-12}$$

$$P_f = 2e^{\frac{-562.455}{V}} \quad \text{if N = 13-18}$$

$$P_f = 2e^{\frac{-593.412}{V}} \quad \text{if N = 19-24}$$

$$P_f = 2e^{\frac{-624.483}{V}} \quad \text{if N > 24}$$

Where:

N = The number of affected nozzles. For manifolded systems, N equals the total number of nozzles. For dedicated plumbing configurations, N equals the number of nozzles serviced by the tank being tested.
P_f = The minimum allowable five-minute final pressure, inches H_2O
e = A dimensionless constant approximately equal to 2.718
2 = The initial starting pressure, inches H_2O

9.2 The minimum time required to pressure the system ullage from zero (0) to two (2.00) inches H_2O gauge pressure shall be calculated as follows:

$$t_2 = \frac{V}{[1522]F} \qquad \text{[Equation 9-2]}$$

Where:

t_2 = The minimum time to pressurize the ullage to two inches H_2O, minutes
V = The total ullage affected by the test, gallons
F = The nitrogen flowrate into the system, CFM
1522 = The conversion factor for pressure and gallons

9.3 If the policy of the local district requires an allowable tolerance for testing error, the minimum allowable five-minute final pressure, including testing error, shall be calculated as follows:

$$P_{f-E} = 2 - \left[1 + \left(\frac{E}{100}\right)\right]\left[408.9 - \left(P_f + 406.9\right)\right] \qquad \text{[Equation 9-3]}$$

Where:

P_{f-E}	=	The minimum allowable five-minute final pressure including allowable testing error, inches H_2O
E	=	The allowable testing error, percent
P_f	=	The minimum allowable five-minute final pressure calculated in Equations 9-1 or 9-2, inches H_2O
2	=	The initial starting pressure, inches H_2O
408.9	=	Atmospheric pressure plus the initial starting pressure, inches H_2O
406.9	=	Atmospheric pressure, inches H_2O

10. Reporting

10.1 The calculated ullage and system pressures for each five-minute vapor recovery system test shall be reported as shown in Form 3-1. Be sure to include the Phase I system type (two-point or coaxial), the Phase II system type, whether the system is manifolded, and the one-minute pressures during the test.