State of California
AIR RESOURCES BOARD

Executive Order G-70-164

Certification of the
Hasstech VCP-3A Vacuum Assist
Phase II Vapor Recovery System

WHEREAS, the California Air Resources Board ("the Board" or "CARB") has established, pursuant to California Health and Safety Code Sections 39600, 39601 and 41954, certification procedures for systems designed for the control of gasoline vapor emissions during motor vehicle fueling operations (Phase II vapor recovery systems) in its "Certification Procedures for Gasoline Vapor Recovery Systems at Service Stations" (the "Certification Procedures") as last amended December 4, 1981, incorporated by reference into Title 17, California Code of Regulations, Section 94001;

WHEREAS, the Board has established, pursuant to California Health and Safety Code Sections 39600, 39601 and 41954, test procedures for determining the compliance of Phase II vapor recovery systems with emission standards in its "Test Procedures for Determining the Efficiency of Gasoline Vapor Recovery Systems at Service Stations" (the "Test Procedures") as last amended September 1, 1982, incorporated by reference into Title 17. California Code of Regulations, Section 94000;

WHEREAS, Executive Order G-70-7-AD, issued March 22, 1993, certified the Hasstech VCP-2 and VCP-2A Phase II vapor recovery system, with the HP1000 bootless nozzle, to be at least 95 percent effective in self-serve or attendant use;

WHEREAS, Ed Hasselmann of Hasstech, Inc., ("Hasstech") has requested certification of the Hasstech VCP-3A bootless nozzle vapor recovery system (the "VCP-3A system") pursuant to the Certification Procedures and Test Procedures;

WHEREAS, the VCP-3A system differs from the VCP-2 and VCP-2A system in that it includes a solid state control and status panel, an additional pressure switch, and may be used with the three types of bootless nozzles listed in Exhibit 1 of this Order;

WHEREAS, the VCP-3A system has been evaluated pursuant to the Board's Certification Procedures;

WHEREAS, Section VIII-A of the Certification Procedures provides that the Executive Officer shall issue an order of certification if he or she determines that the vapor recovery system conforms to all of the requirements set forth in Sections I through VII of the Certification Procedures; and

WHEREAS, I, James D. Boyd, Air Resources Board Executive Officer, find that the VCP-3A system conforms with all the requirements set forth in Sections I through VII of the Certification Procedures, and results in a vapor recovery system which is at least 95 percent effective for

attendant and/or self-serve use at gasoline service stations when used in conjunction with a Phase I vapor recovery system which has been certified by the Board and meets the requirements contained in Exhibit 2 of this Order.

NOW, THEREFORE, IT IS HEREBY ORDERED that the Hasstech VCP-3A system when used with a CARB-certified Phase I system, as specified in Exhibits 1 and 2 of this Order, is certified to be at least 95 percent effective in attended and/or self-serve mode. Fugitive emissions which may occur when the underground storage tanks are under positive pressure have not been quantified and were not included in the calculation of system effectiveness. Exhibit 1 contains a list of the equipment certified for use with the Hasstech VCP-3A system. Exhibit 2 contains installation and performance specifications for the system. Exhibit 3 contains a static pressure decay test procedure.

IT IS FURTHER ORDERED that the dispensing rate for installations of the VCP-3A system shall not exceed ten (10.0) gallons per minute when only one nozzle associated with the product supply pump is operating. This is consistent with the flowrate limitation imposed by United States Environmental Protection Agency as specified in the Federal Register, Volume 58, Number 55, page 16019.

IT IS FURTHER ORDERED that compliance with the certification requirements and rules and regulations of the Division of Measurement Standards of the Department of Food and Agriculture, the State Fire Marshal's Office, and the Division of Occupational Safety and Health of the Department of Industrial Relations is made a condition of this certification.

IT IS FURTHER ORDERED that the following requirements are made a condition of certification. The VCP-3A system shall be installed only in facilities which are capable of demonstrating on-going compliance with the vapor integrity requirements contained in Exhibit 3 of this Order. The owner or operator of the installation shall conduct, and pass, a static pressure decay test at least once in each twelve month period, and the results shall be made available to the district upon request within fifteen days after the test is conducted, or within fifteen days of the request. Alternative test procedures may be used if determined by the Executive Officer to yield comparable results.

IT IS FURTHER ORDERED that the certified VCP-3A system shall, at a minimum, be operated in accordance with the manufacturer's recommended maintenance intervals and shall use the manufacturer's recommended operation, installation, and maintenance procedures.

IT IS FURTHER ORDERED that the VCP-3A system, as installed, shall comply with the procedures and performance standards the test installation was required to meet during certification testing. Local districts may adopt stricter procedures or performance standards in accordance with the California Health and Safety Code section 41954 (g). Failure to demonstrate compliance with procedures or performance standards stricter than those imposed during certification testing does not constitute failure of the VCP-3A system to meet the terms and conditions of this Executive Order. If, in the judgment of the Executive Officer, a significant fraction of installations fail to meet the specifications of this certification, or if a significant portion of the vehicle population is found to have configurations which significantly impair the system's collection efficiency, the certification itself may be subject to modification, suspension or revocation.

IT IS FURTHER ORDERED that all nozzles approved for use with the Hasstech VCP-3A system shall be 100 percent performance checked at the factory, including checks of the integrity of the vapor and liquid path, as specified in Exhibit 2 of this Order, and of the proper functioning of all automatic shut-off mechanisms.

IT IS FURTHER ORDERED that each vapor pump shall be adjusted and 100 percent performance checked at the factory, including verification that the vapor recovery system performance is within the range specified in Exhibit 2 of this Order.

IT IS FURTHER ORDERED that the certified VCP-3A system shall be warranted in writing, for at least one year, to the ultimate purchaser and each subsequent purchaser, that the vapor recovery system is designed, built and equipped so as to conform at the time of original installation or sale with the applicable regulations and is free from defects in materials and workmanship which would cause the vapor recovery system to fail to conform with applicable regulations. Copies of the manufacturer's warranty for the VCP-3A system shall be made available to the station manager, owner or operator. Hoses, nozzles and breakaway couplings shall be warranted to the ultimate purchaser as specified above for at least one year, or for the expected useful life, whichever is longer.

IT IS FURTHER ORDERED that the certified VCP-3A system shall be performance tested during installation for ability to dispense gasoline and collect vapors without difficulty, in the presence of the station manager or other responsible individual. The station manager, owner or operator shall also be provided with instructions in the proper use of the VCP-3A system, its repair and maintenance, where system and/or component replacements can be readily obtained, and shall be provided with copies of the installation and maintenance manuals for the VCP-3A system to be maintained at the station. Revisions to the manual shall be submitted to CARB for approval.

IT IS FURTHER ORDERED that any alteration of the equipment, parts, design, or operation of the systems certified hereby is prohibited, and deemed inconsistent with this certification, unless such alteration has been approved by the Executive Officer or his/her designee.

Executed at Sacramento, California, this 11th day of April, 1995.

James D. Boyd
Executive Officer

Attachments

Executive Order G-70-164

Exhibit 1
Hasstech VCP-3A System Equipment List

Component	Manufacturer/Model	State Fire Marshal Identification Number
Nozzles	OPW 11VAI-XX (Figure 2C-1) Without vapor valve where XX = 22 (leaded, hold-open clip) 27 (unleaded, hold-open clip) 42 (leaded, no hold-open clip) 47 (unleaded, no hold-open clip)	005:001:001
	Emco Wheaton A4500-002 (Figure 2C-2) Without vapor valve	005:007:042
	Husky V34 6200-8 (Figure 2C-3) With vapor valve OR Any bootless nozzle which has been CARB certified for use with the VCP-3A system.	005:008:049
Vapor Pump (Collection Unit)	Rotron Regenerative Blower (1/2 hp) Model Number DR 313 AK4HA (Figure 2B-2)	1016-7
Inverted Coaxial Hoses	Catlow VaporMate	005:033:005
	Dayco 7282 Superflex 2000	005:033:005
	Dayco 7292 Superflex 4000	005:033:006
	Goodyear Flexsteel	005:036:002
	GT Sales/Hewitt Superflex 2000	005:033:005
	Thermoid Hi-Vac	005:037:003
	Thermoid Hi-Vac S	005:037:004
	VST VSTalflex	005:052:001
	OR Any inverted coaxial hose CARB certified for use with the Hasstech VCP-3A system.	
Flow Actuated Vapor Valve	CFC-1 coaxial flow actuated vapor valve	005:001:002
Flame Arrestors		
Dispenser	Hasstech 1025-3/4"	1016-5
Pump Inlet	Protectoseal SP 4951 (1-1/4")	1016-6
Pump Outlet	Protectoseal SP 4951 (1-1/4")	1016-8
OR substitute	Hasstech 1025 - (1-1/4")	1016-6 and -8

Processor Unit	Hasstech 1016-PR-A (Figure 2B-1) with serial numbers greater than PR-00908	1016-PRA
Process Control Panel	Hasstech Electronic Control and Status Panel ECS-1 with Audible Alarm and Serial Numbers VR-00848 and higher (Figure 2B-3)	005:001:003
Pressure/Vacuum Valves	OPW 523LP, 523LPS (settings as specified below)	005:008:051
	Hazlett H-PVB-1 Gold label (settings as specified below)	005:017:004
	Varec Model Number 2010-811-2	1016-9

OR
Any CARB-certified valve with the following pressure and vacuum settings, in inches water column (wc):

Pressure: three plus or minus one-half inches (3.0 ± 0.5") wc.
Vacuum: eight plus or minus two inches (8 ± 2") wc.

Tank Pressure Switch Part Number PST-1 (Figure 2B-4)

Breakaway Couplings
(optional component)

Couplings with vapor valves:

Catlow AV2001 or OPW 66CIP	005:031:006
Richards Industries VA-60	005:031:009
Richards Industries VA-50	005:031:007
Husky 4034	005:021:009

Couplings without a vapor valves:
(To be used only with a remote vapor valve i.e., a CFC-1 Flow Control Valve)

Catlow AV200	005:030:005
Catlow AV200-1	005:030:005
OPW 66CI	005:030:005
Richards Industries VA-51	005:031:007

OR
Any breakaway coupling has been CARB-certified for use with the VCP-3A system

Vapor Plumbing Components
(optional components)

In-tank drain check	Hasstech 1044	1016-31
Out-of-tank drain check	Hasstech 1042	1016-32

Tank Stick Correction Gauge
(optional component) Hasstech TSC (see Figure 2B-7)

Executive Order G-70-164

Exhibit 2

Specifications for the Hasstech VCP-3A System

Typical installations of the Hasstech system are shown in Figures 2A-1 through 2A-5.

Nozzles

1. Failure mode testing has demonstrated that blockage of some of the vapor collection holes in the spout has negligible effect on the operation of the system. Any nozzle which has fewer unblocked holes than are required below is defective and shall be immediately removed from service.

Nozzle Type	Total Number of Holes per Nozzle	Minimum Number of ***Unblocked*** Vapor Holes Required
Emco Wheaton A4500	7	3
Husky V34 6200-8	8 (6 in circle around spout, plus 1 higher, and 1 for shutoff aspirator)	1 (must be among the 6)
OPW 11VAI	18 (steel spout)	was not determined
	12 (aluminum spout)	was not determined

2. An Emco Wheaton A4500 nozzle (Figure 2C-2) which has any visible puncture or tear of the vapor guard/vapor seal assembly is defective and shall be immediately removed from service.

3. A leaking vapor valve, whether in the nozzle or remotely located, may compromise the vapor recovery capabilities of the entire vapor recovery system; therefore, it is imperative that defective vapor valves be corrected expeditiously in order to minimize emissions.

   The Husky V34 6200-8 nozzle has an integral vapor valve which prevents the loss of vapor from the underground storage tanks, ensures proper operation of the system and prevents the ingestion of air into the system. Any nozzle with a defective vapor valve shall be immediately removed from service. The integrity of the system shall be restored by replacing the nozzle or otherwise closing the vapor path as soon as practicable.

. The OPW 11VAI nozzle (Figure 2C-1) and the Emco Wheaton A4500-002 nozzles do not have an integral vapor valve. These nozzles shall be installed with a certified remote vapor valve (i.e., CFC-1 flow control vapor valve) as specified in Exhibit 1 of this Order. Any nozzle associated with a defective remote vapor valve shall be immediately removed from service. The integrity of the system shall be restored by replacing the remote vapor valve or otherwise closing the vapor path as soon as practicable.

4. Nozzles shall be 100 percent performance checked at the factory, including checks of all shutoff mechanisms and of the integrity of the vapor path. The maximum allowable leak rate for nozzles with internal vapor valves during this factory performance test shall not exceed the following:

   0.038 CFH at a pressure of at least two (2) inches water column
   0.005 CFH at a vacuum of at least forty (40) inches water column.

5. Leaded and unleaded spouts are interchangeable.

Flow Actuated Vapor Valves

1. A flow actuated vapor valve, as listed in Exhibit 1, shall be installed in conjuction with each nozzle which does not have an integral vapor valve. Vapor valves shall be 100 percent performance checked at the factory. The maximum allowable leak rate for vapor valves during this factory performance test shall not exceed the following:

   0.038 CFH at a pressure of at least two (2) inches water column
   0.005 CFH at a vacuum of at least forty (40) inches water column.

Breakaway Couplings

1. Breakaway couplings are optional. If they are installed, only certified breakaways with a valve which closes the vapor path when separated shall be used for nozzles with internal vapor valves. Note: a breakaway with a vapor valve that closes upon separation is not required if the CFC-1 flow control valve (or any other remote vapor valve CARB certified with the VCP-3A system) is used because the vapor path remains closed unless there is gasoline flow.

Inverted Coaxial Hoses

1. The maximum length of the hose shall be 14 feet.

2. The length of hose which may be in contact with the island and/or ground when the nozzle is properly mounted on the dispenser is limited to six (6) inches.

Collection Unit (Vapor Pump)

1. The VCP-3A system shall operate with a certified collection unit (pump) specified in Exhibit 1 capable of meeting the air to liquid (A/L) ratio specified below. The A/L ratio of the system, measured at a flowrate of at least six gallons per minute (6 gpm), shall be within the values listed in the following table (linear interpolation may be used to calculate intermediate values). Any fueling point not capable of demonstrating compliance with this performance standard shall be deemed defective and removed from service. The A/L ratio shall be determined by a CARB-approved or district-approved test procedure. (Draft procedure TP-201.5 may be used until an A/L ratio test procedure is adopted by CARB). Alternative test procedures may be used if they are determined by the Executive Officer to yield comparable results.

Air to Liquid Ratios

Flow Rate (gpm)	Minimum Ratio	Maximum Ratio
6	1.40	2.40
8	1.40	2.30
10	1.40	2.15

NOTES:

a. The Husky V34 6200-8 nozzle requires a special A/L adapter that will encompass all of the vapor recovery holes; however, test results have indicated that a special A/L adapter is not necessary if the single top hole is covered for the A/L test (refer to Figure 2C-3).

b. This test procedure returns air rather than vapor to the storage tank, and may cause an increase in storage tank pressure and/or affect process unit operation. Temporary conditions which are attributable to the test are not to be considered an indication of malfunction or noncompliance.

2. No dispensing shall be allowed when the collection unit is disabled for maintenance or for any other reason unless the facility is operating under a district variance or upset/breakdown rule provision.

3. The maximum number of fueling points which can be supported by one collection unit is sixteen (16). This is based on an in-use factor of fifty percent (50%) and a demonstration of eight nozzles dispensing 7.5 gallons simultaneously with an A/L ratio greater than 1.4. Additional fueling points require an additional collection unit (one per sixteen additional fueling points).

4. OSHA-approvable access to the collection unit shall be provided immediately upon request for maintenance, inspection and/or testing.

5. The local district may require the installation of a tap at least 1/8" NPT be provided on the inlet and outlet side of the collection unit. The taps shall remain plugged and vapor tight except when test equipment is being connected or removed, and air ingestion and/or vapor loss associated with connecting or removing test equipment shall be minimized. The vacuum level at the inlet of the collection unit can be adjusted by changing the size of the by-pass orifice. The normal operating level at this point shall be minus 30 to 40 inches water column.

   Note: Changing the length of the hoses or the number of installed nozzles may affect the vacuum level and require adjustment of the by-pass orifice.

Processing Unit (burner)

1. The Hasstech VCP-3A Processing consists of an inline flame arrestor, an inline pressure switch, a solenoid activated vapor valve, another flame arrestor, and a single stage burner assembly with electronic ignition and a flame detector (refer to Figure 2B-1).

2. At no time shall emissions from the processing unit exceed Ringelmann one-half (1/2) or ten percent (10%) opacity. Note: visible emissions, except water vapor or heat waves, may indicate improper burner operation unless associated with a Phase I fuel delivery.

3. The horizontal distance between the pressure/vacuum valve and the processing unit shall be not less than twenty (20) feet. The processing unit shall be installed in accordance with the manufacturer's installation manual.

4. Twenty (20) consecutive unsuccessful attempts to ignite the process unit shall cause the process unit to lock out and the alarm to be activated. This condition would most likely represent a broken flame sensor or a defective ignitor. When this condition has occurred, it shall be deemed a failure of the process unit.

5. Twenty (20) non-consecutive unsuccessful attempts to ignite the process unit shall cause the alarm shall be activated but shall allow the process unit to continue to operate. The reason to allow the process unit to operate is that the failed ignition attempts may not represent a defective process unit. The alarm is activated so that the station operator is alerted to have the unit checked out for a possible problem.

6. No dispensing shall be allowed when the process unit is disabled for maintenance or for any other reason unless the facility is operating under a district variance or upset/breakdown rule provision.

7. OSHA-approvable access to the process unit shall be provided immediately upon request for maintenance, inspection and/or testing.

8. The location of the process unit shall be subject to the approval of the local fire authority.

ECS-1 Electronic Control and Status Panel

1. The VCP-3A system shall have an operable ECS-1 control and status panel. (refer to Figure 2B-3. The ECS-1 status panel shall have clearly labeled indicators, which light to indicate when the collection unit and process unit are operating. The VCP-3A system may be differentiated from previous versions of the VCP-2A by the ECS-1 control and status panel serial numbers greater than VR-00848 and process unit serial numbers greater than PR-00908. No other versions of these components shall be used with the VCP-3A system. Note: This status panel has "YES" , "NO" and "Reset" buttons. Previous versions of the status panel, not for use with the VCP-3A system, do not have the "Reset" button.

2. The status panel shall record and store for 365 days the total number of minutes per day that the Process Unit ("PR") senses the presence of a flame and the total number of minutes per day that the solenoid valve to the burner ("SO") is open. This shall be determined on the basis of data points taken at least every 0.5 seconds. This information shall be accessible by pressing the "YES" button on the status panel. The ratio of PR/SO time which indicates that the system is operating properly shall be not less than 0.90.

3. Each ECS-1 electronic and control status panel shall have instructions readily available to station personnel on how to operate the panel. These instructions shall include the service code numbers for the alarm mode and the normal mode (alarm light emitting diode not lit).

4. The ECS-1 panel shall display "CALL FOR SERVICE" when the number of unsuccessful attempts to ignite the burner in a twenty-four hour period reaches twenty.

5. The status panel shall also indicate the system status, either by displaying "SYSTEM NORMAL" (indicating that the FLAME/VALVE ratio is in the normal operating range as specified above) or by displaying the message "CALL FOR SERVICE".

Audible Alarm

1. The VCP-3A system shall include an audible alarm which shall sound if any of the following conditions have occurred:

   - the submerged turbine pump has been activated for two seconds without causing activation of the collection unit; or

   - the processing unit has made twenty (20) consecutive unsuccessful attempts to ignite; or

   - the processing unit has made twenty (20) non-consecutive unsuccessful attempts to ignite in a 24 hour period.

   If the alarm sounds, the manual reset shall be used to restart the system. If the alarm sounds again within several hours, the unit is presumed to be malfunctioning and a call for service shall be made.

2. The audible alarm shall be located such that it can easily be heard by station personnel in the area most likely to be occupied during normal station operation (i.e., at the cash register.)

Tank Pressure Switch

1. The VCP-3A system contains two pressure switches designed to activate the system. The inline pressure switch, located in the processing unit, shall be set to activate at a nominal inlet pressure of 1 inch water column. The second pressure switch (Part Number PST-1) shall be installed on the tank outlet of the collection unit. The purpose of the tank pressure switch is to monitor the storage tank pressure and to activate the system if the tank pressure exceeds plus 0.1 inches of water column. During normal operations, the VCP-3A system maintains storage tank pressures in the range of minus 0.5 to plus 0.1 inches of water column. This range is occasionally exceeded briefly due to peak activity periods or bulk fuel delivery operations. Pressures which are consistently outside of this range may indicate system malfunction.

Pressure/Vacuum Valves for Storage Tank Vents

1. A pressure/vacuum (P/V) valve shall be installed on each tank vent. Vent lines may be manifolded provided the manifold is installed at a height not less than 12 feet above the driveway surface used for Phase I tank truck filling operations. At least one P/V valve shall be installed on manifolded vents. If two P/V valves are desired, they shall be installed in parallel, so that each can serve as a backup for the other if one should fail to open

properly. The P/V valve shall be CARB-certified as specified in Exhibit 1, and shall be installed so as to ensure that any venting from the system will occur only when the P/V valve settings are exceeded. The outlets shall vent upward and be located to eliminate the possibility of vapor accumulating or traveling to a source of ignition or entering adjacent buildings.

Vapor Recovery Piping Configurations

1. All vapor return lines shall slope a minimum of 1/8 inch per foot. A slope of 1/4 inch or more per foot is recommended wherever feasible.

2. The dispenser shall be connected to the riser with either flexible or rigid material which is listed for use with gasoline. The dispenser-to-riser connection shall be installed so that any liquid in the lines will drain toward the storage tank. The internal diameter of the connector, including all fittings, shall not be less than five-eighths inch (5/8").

3. The nominal inside diameter of the underground vapor and vent lines shall be two inches (2"). The condensate drain line may be a minimum of one-half (0.5) inches internal diameter. All vapor lines shall allow unobstructed passage of vapor as appropriate in normal operation of the system. The vapor return lines shall be installed as indicated in the appropriate figures.

4. All vapor return and vent piping shall be, at a minimum, installed in accordance with the manufacturer's instructions and all applicable regulations. Local districts may impose additional requirements.

5. A tank stick correction gauge (optional) may be installed at the vent line. The gauge shall be installed on the vent line at least six and no more than ten feet (6' - 10') above grade, and shall be installed so that it allows no vapor emissions and so that any condensate will drain away from the gauge. The gauge is shown in Figure 2B-7 and reads in inches of gasoline (pressure to the left of zero and vacuum to the right of zero).

Piping Configuration Using Out-of-Tank Drain Check (Figures 2A-4 and 2A-5)

1. The vapor piping shall have a natural drainage of condensate to the underground storage tanks to ensure that the intended path of vapors is not subjected to liquid blockage. Note: Local districts may require the introduction of liquid into vapor lines before conducting air to liquid ratio tests to verify natural drainage.

2. The drain check is designed to be normally flooded with product (Figure 2A-5).

Piping Configuration Using a Condensate Trap

1. Vapor piping configurations using a condensate trap is not a recommended configuration. However, there are situations, such as a station's topography, that do not make it feasible nor practical to require the vapor piping to naturally drain to the underground storage tanks. The District shall explore all other approved piping configurations prior to approving the use of a condensate trap which is self-evacuating, vapor tight and accessible for inspection. If a district elects to allow a condensate trap which is not self evacuating, the district may

require the station operator to maintain a log documenting regular evacuation of the condensate trap to ensure that these devices do not block the vapor path to the underground storage tank.

Storage Tank and Phase I System

WARNING: Phase I fill caps should be opened with caution because the storage tank may be under pressure.

1. The local district may require the installation of a threaded tap at least 1/8" in diameter at which the underground storage tank (UST) pressure may be monitored. The tap may be in the dispenser riser connection or on the vent line, and shall be accessible for connection to a pressure gauge. One tap is adequate for manifolded systems. The tap shall remain plugged and vapor tight except when test equipment is being connected to or removed from it. The system shall not be allowed to operate when the taps are not vapor tight. If located on the vent line, the tap shall be at least six feet (6') and not more than eight feet (8') above grade. A high-quality quick-connect fitting with a vapor-tight cap may be installed instead of a plug if specified by the district.
   Note: Frequent venting (except when caused by air ingested into the system during the performance of the A/L ratio test, Phase I activities, or other events not specifically caused by the Phase II system) may indicate system malfunction.

2. The Phase I system shall be a CARB-certified system which is in good working order and which demonstrates compliance with the static pressure decay test criteria contained in Exhibit 3 of this Order. Coaxial Phase I systems shall not be used with new installations of the system. Replacement of storage tanks at existing facilities, or modifications which cause the installation of new or replacement Phase I vapor recovery equipment, are considered new installations with regard to this prohibition. An exception to this prohibition may be made for coaxial Phase I systems CARB-certified after January 1, 1994, as compatible for use with Phase II systems which require pressure/vacuum vent valves.

   Where installation of the VCP-3A system is made by retrofitting previously installed equipment, local districts may elect to allow existing coaxial Phase I systems to remain in use for a specifically identified period of time provided the following conditions are met:

   - the existing coaxial Phase I system is a poppeted, CARB-certified system capable of demonstrating compliance with the static pressure decay test as specified above; and

   - installation of the Phase II system requires no modification of the UST(s) and/or connections.

3. Spill containment manholes which have drain valves shall demonstrate compliance with the static pressure decay criteria with the drain valves installed as in normal operation. Manholes with cover-actuated drain valves shall not be used in new installations (as defined above) after May 1, 1995. Manholes with cover-actuated drain valves may remain in use in facilities where installation of the Hasstech VCP-3A system does not require modification of the tank fittings provided the facility demonstrates compliance with static pressure decay test criteria both with the cover open and with the cover closed. The local

district may require the removal of drain valves provided an alternate method of draining the spill container is specified (i.e., a hand pump maintained at the facility and/or on the product delivery trucks.)

4. The Phase I vapor recovery system shall be operated during product deliveries so as to minimize the loss of vapors from the facility storage tank which may be under pressure. There shall be no less than one vapor return hose connected for each product being delivered. Provided it is not in conflict with established safety procedures, this may be accomplished in the following manner:

    - The Phase I vapor return hose is connected to the delivery tank and to the delivery elbow before the elbow is connected to the facility storage tank;

    - the delivery tank is opened only after all vapor connections have been made, and is closed before connection of any vapor return hoses;

    - the existing coaxial Phase I equipment is in good working order and has demonstrated compliance with static pressure decay test criteria when tested with all fill caps removed; and

    - the vapor return hose is disconnected from the facility storage tank before it is disconnected from the delivery tank.

5. Storage tank vent piping shall be maintained white, silver or beige. Colors which will similarly prevent heating of the system due to solar gain may also be used, provided they are listed in the EPA AP-42 as having a factor the same as or better than that of the colors listed above.

6. Manholes shall be maintained a color which minimizes solar gain, as specified above. Manhole covers which are color coded for product identification are exempted from this requirement.

Executive Order G-70-164
Figure 2A-1
Vapor Recovery Piping Schematic

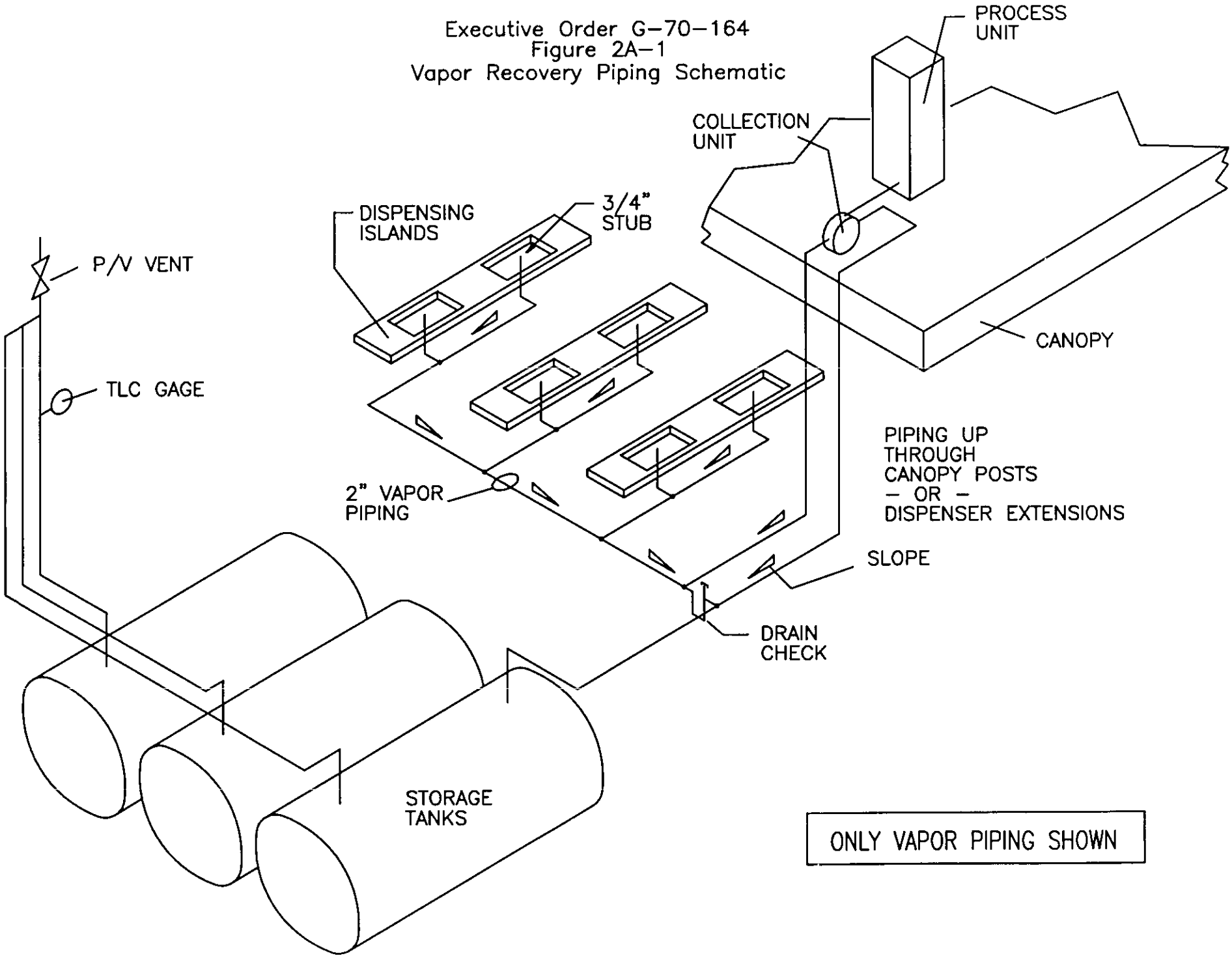

Executive Order G-70-164
Figure 2A-2
Pad Mounted Collection/Processing

** TABLE OF DISTANCES & HEIGHTS

DISTANCE FROM TANK VENTS OR FUEL TRANSFER POINTS	MINIMUM HEIGHT ABOVE GRADE
NOT LESS THAN 20 FEET	48 INCHES
30 FEET	42 INCHES
40 FEET	30 INCHES
50 FEET	18 INCHES
> 50 FEET	6 INCHES
NOTE: IGNITION SOURCE AT PROCESSOR IS 12 INCHES ABOVE BASE.	

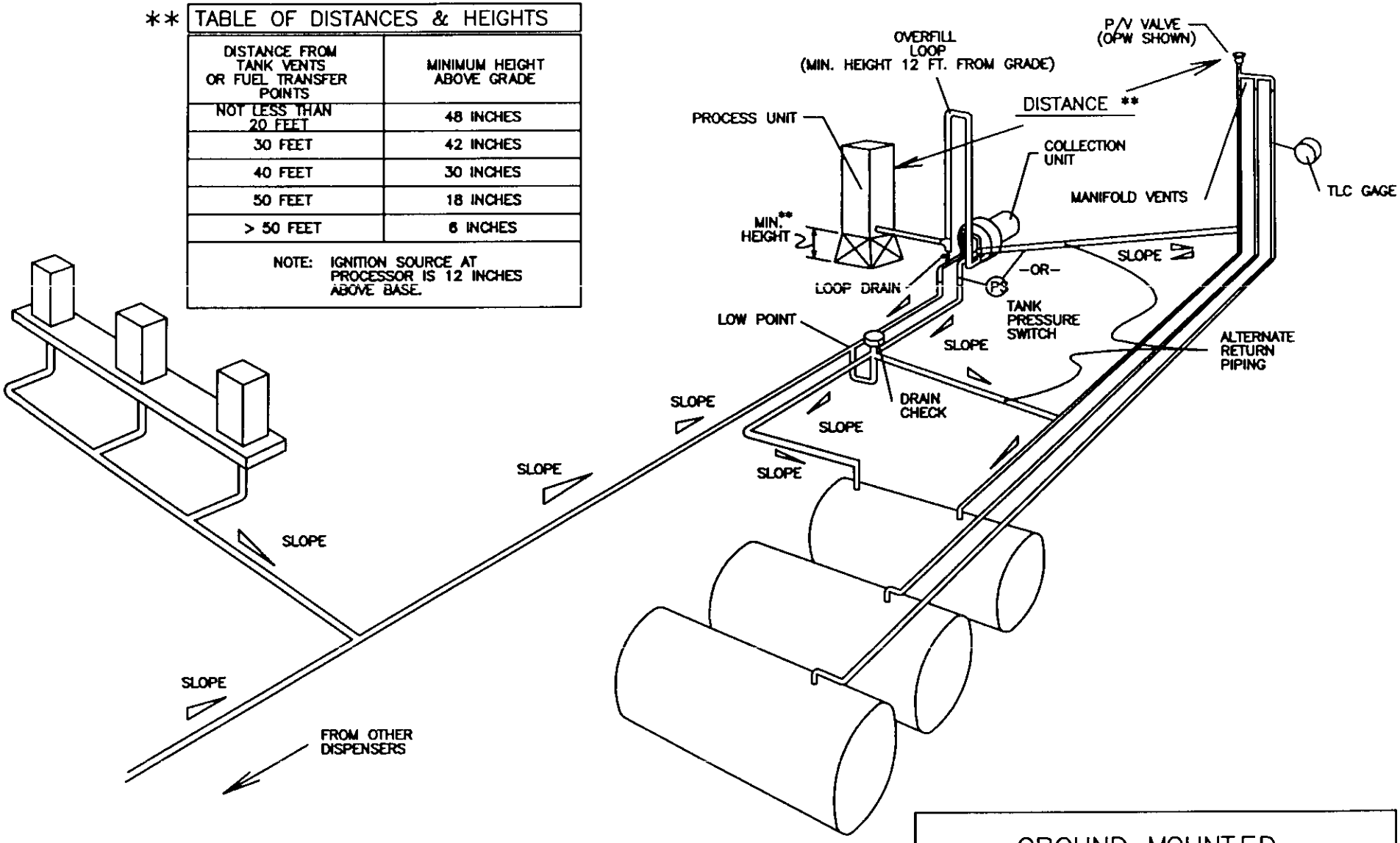

GROUND MOUNTED
VAPOR RECOVERY SYSTEM

Executive Order G-70-164
Figure 2A-3
Canopy Mounted Processor

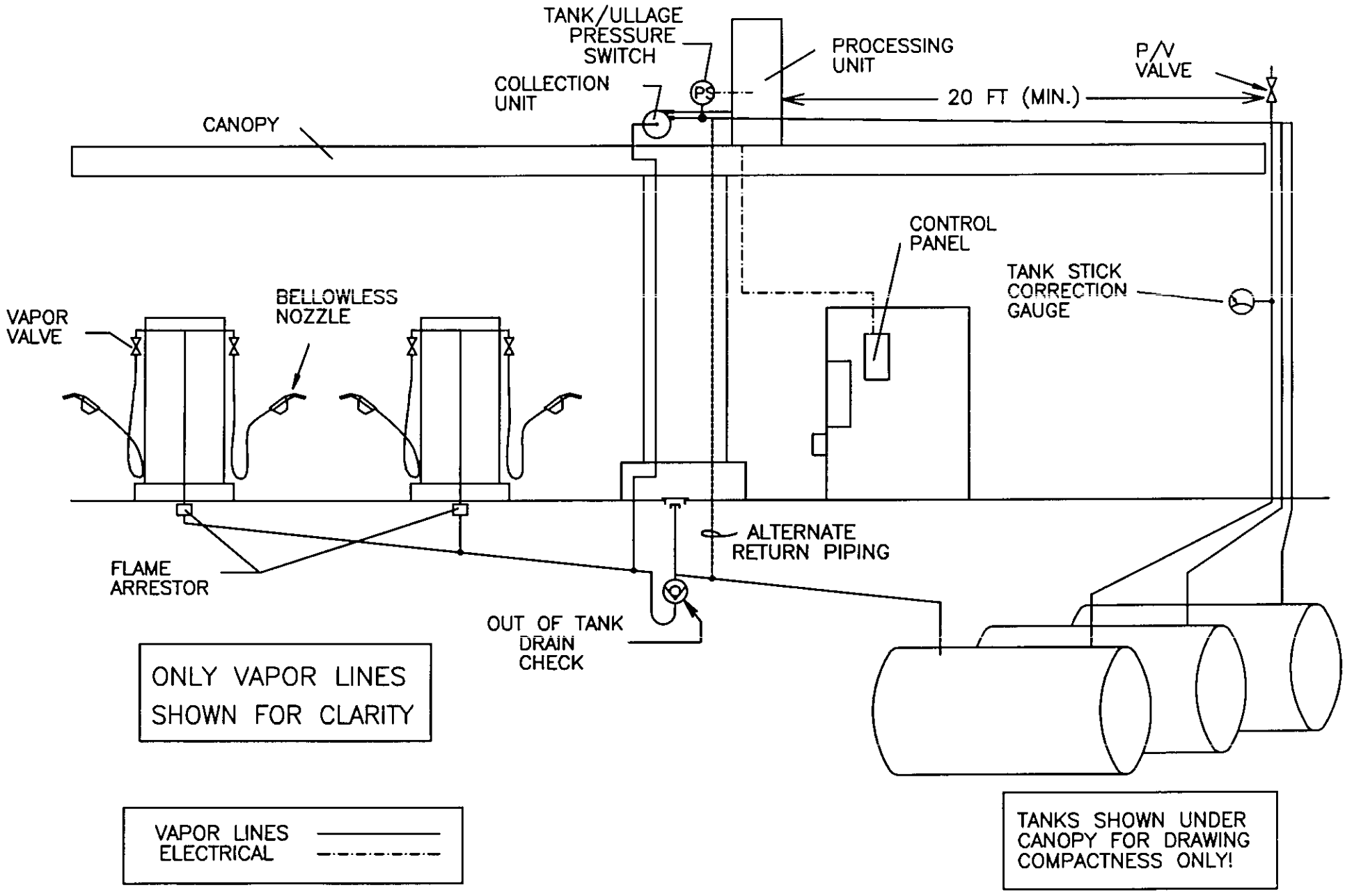

Executive Order G-70-164
Figure 2A-4
Out of Tank Drain Check

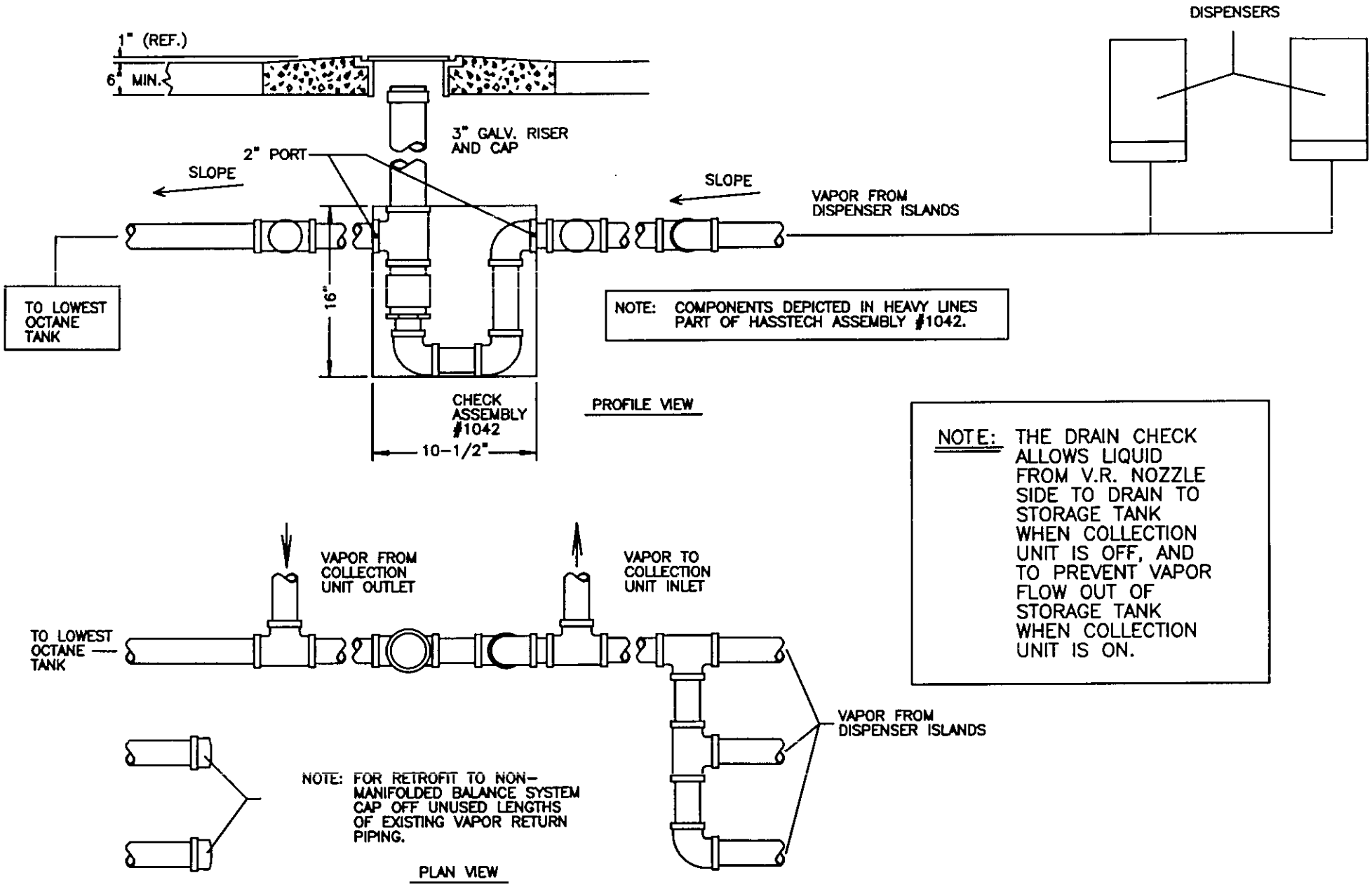

NOTE: THE DRAIN CHECK ALLOWS LIQUID FROM V.R. NOZZLE SIDE TO DRAIN TO STORAGE TANK WHEN COLLECTION UNIT IS OFF, AND TO PREVENT VAPOR FLOW OUT OF STORAGE TANK WHEN COLLECTION UNIT IS ON.

Executive Order G-70-164
Figure 2A-5
Operation of Tank Drain Check

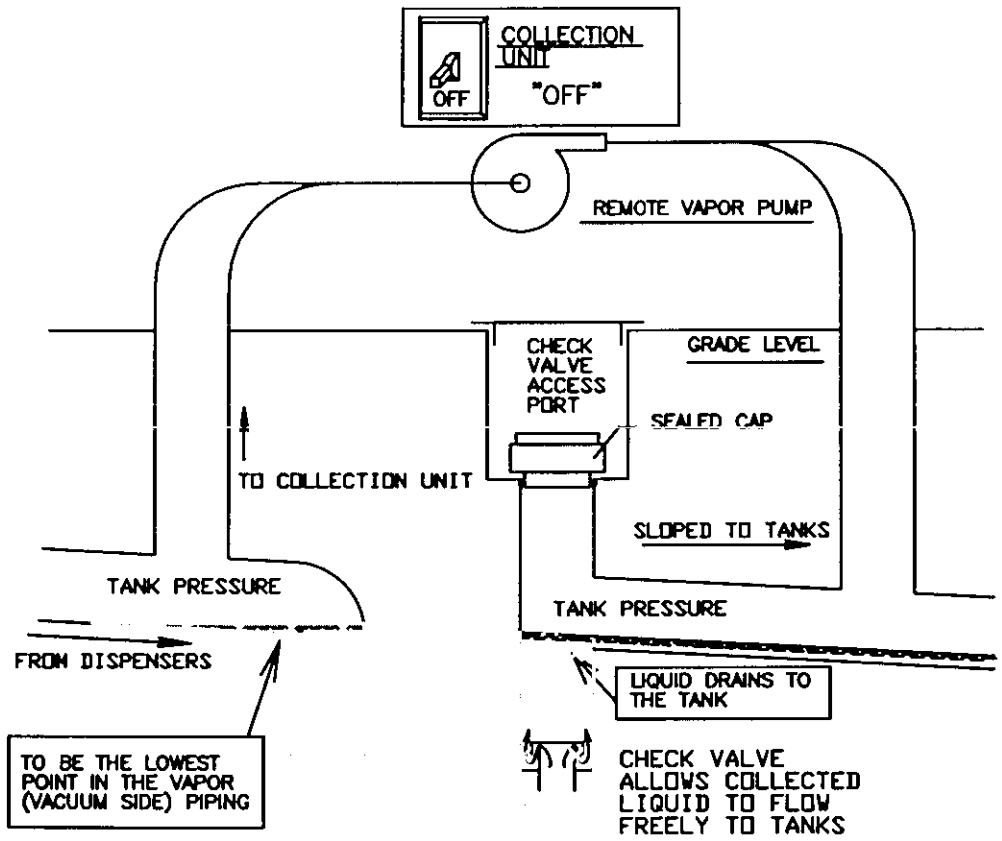

FIGURE 1
CHECK VALVE, NO COLLECTION

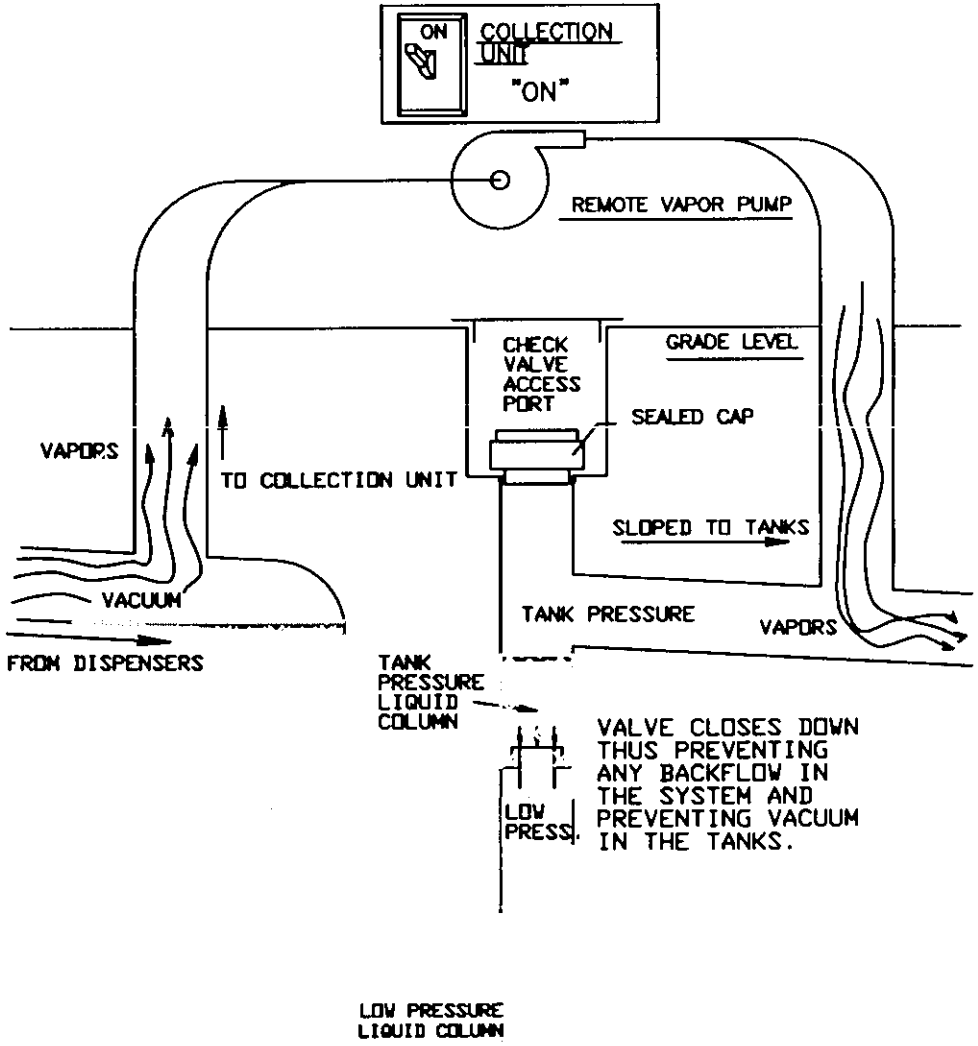

FIGURE 2
CHECK VALVE, DURING COLLECTION

VALVE IS NORMALLY FLOODED AS SHOWN

Executive Order G-70-164
Figure 2B-1
Processing Unit

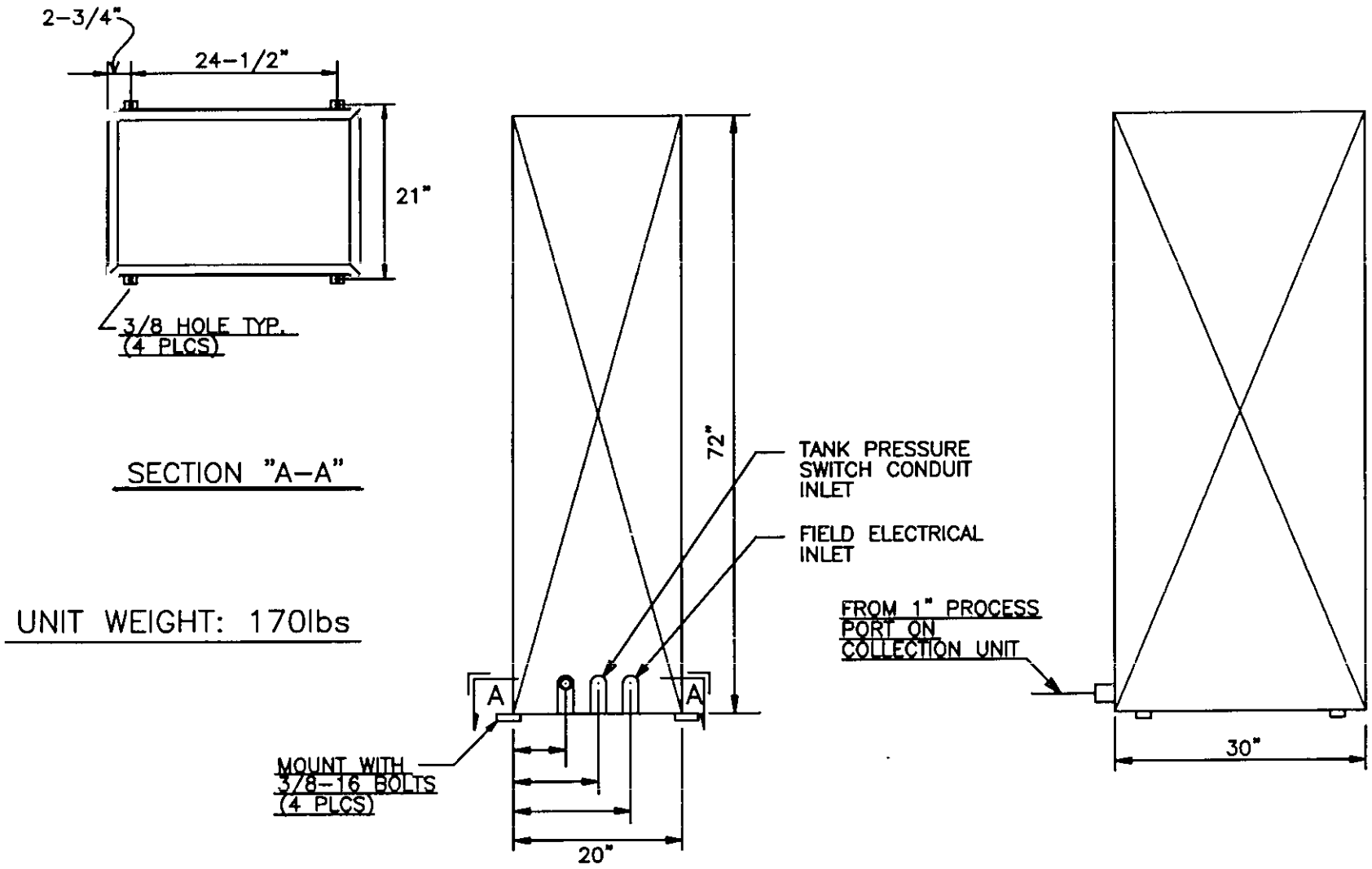

Executive Order G-70-164
Figure 2B-2
Collection Unit Detail

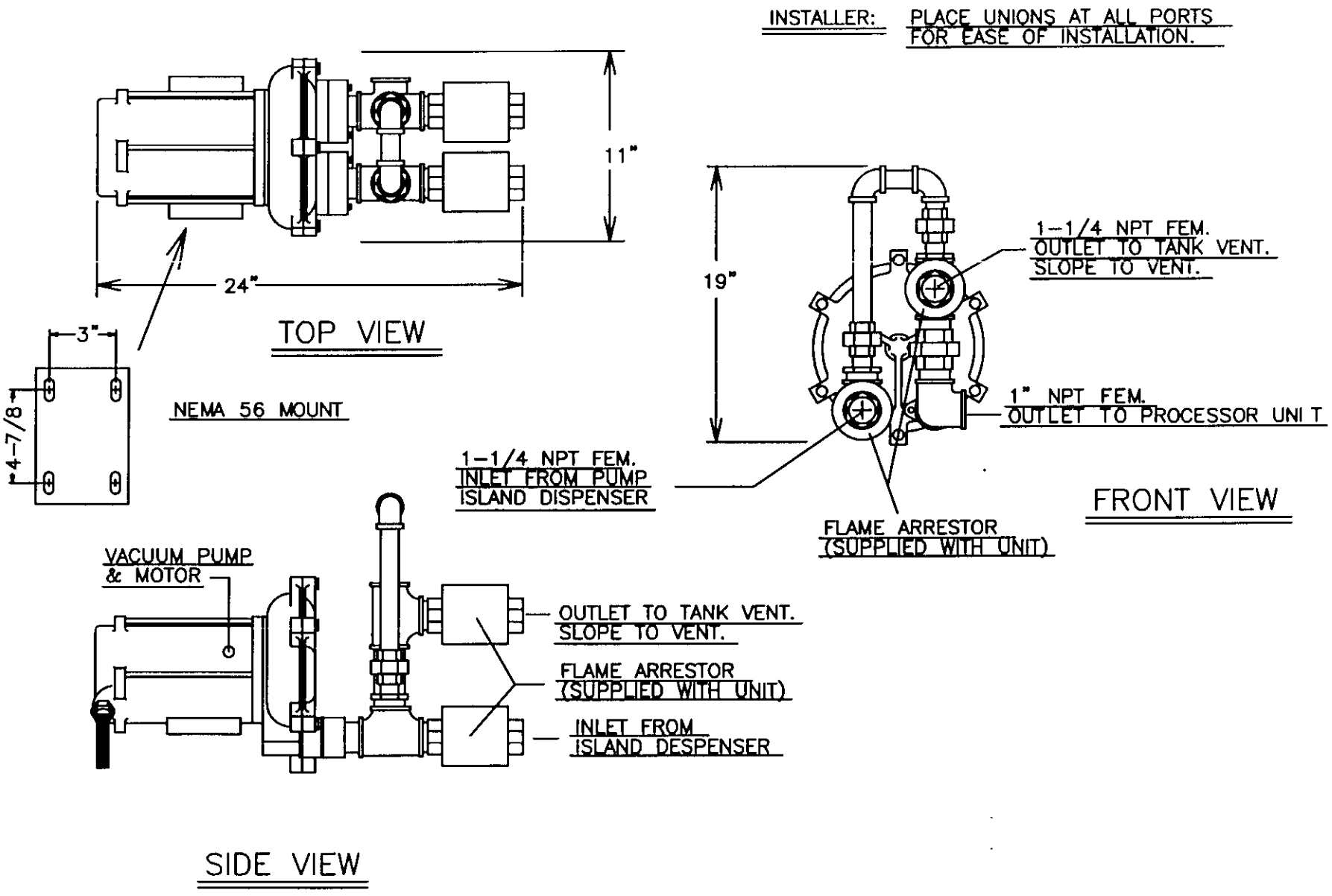

Executive Order G-70-164
Figure 2B-3
Control Panel

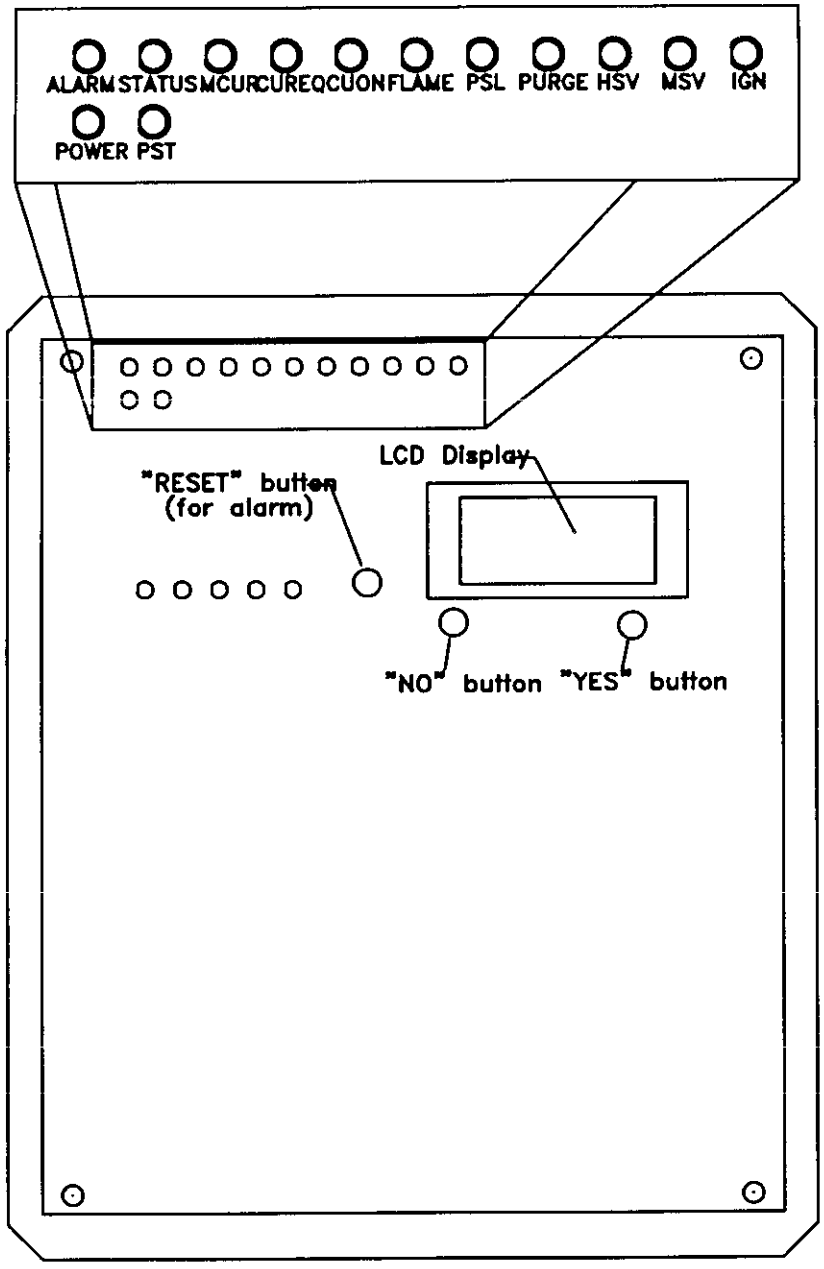

Key to LEDs:

ALARM =>ALARM CONDITION
CUON =>COLLECTION UNIT ACTIVE
CUREQ =>DISPENSER ACTIVE
FLAME =>PROCESSING VAPORS
HSV =>HIGH VOLUME PROCESSING
IGN =>INITIATE PROCESSING
MCUR =>COLLECTION UNIT SENSOR
MSV =>MAIN PROCESSOR VALVE OPEN
POWER =>PANEL POWER
PSL =>PROCESSOR PRESSURE
PST =>TANK ULLAGE PRESSURE
PURGE =>CLEARING LINES
STATUS =>NOT USED

Executive Order G-70-164
Figure 2B-4
Tank Pressure Switch

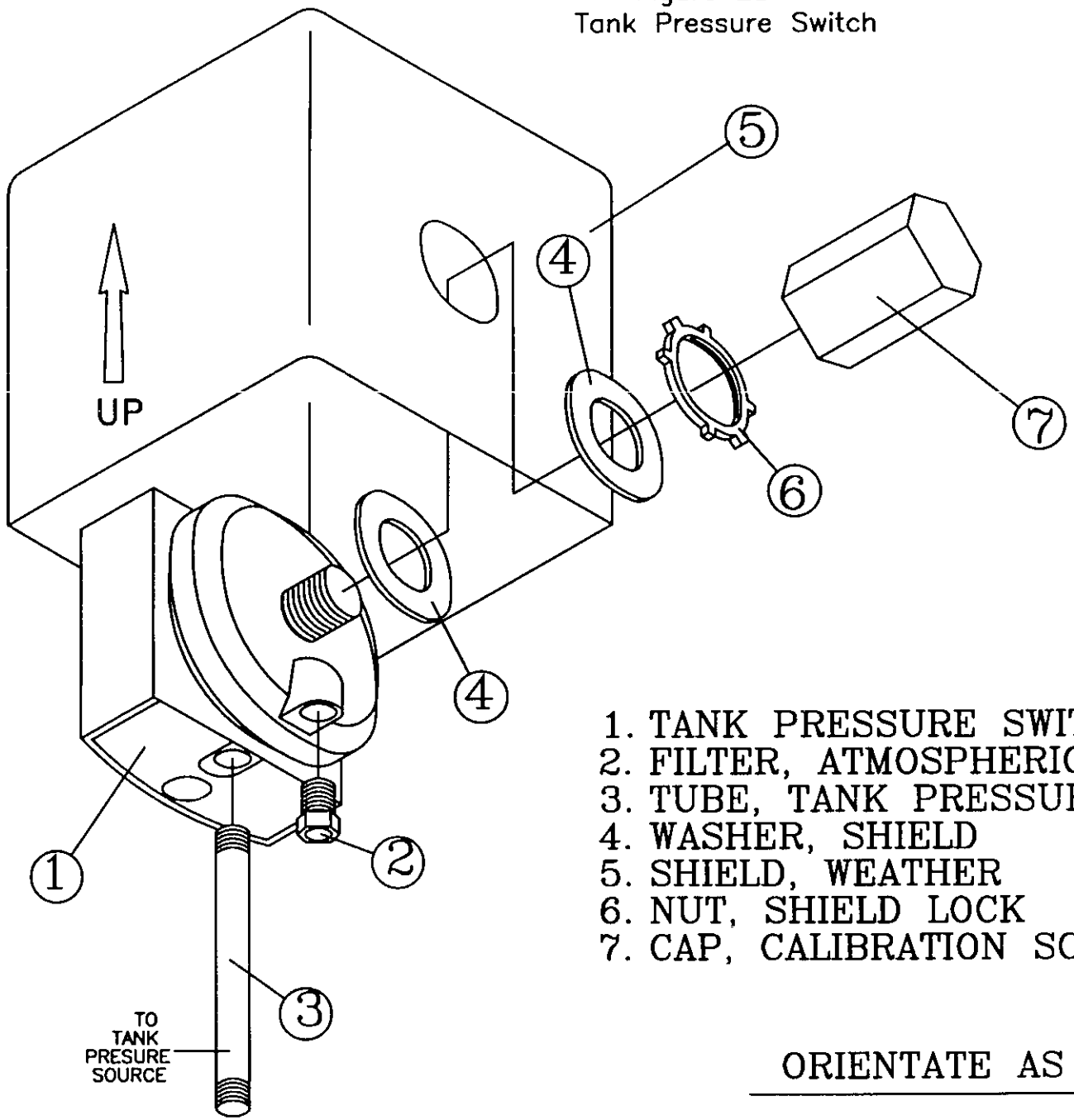

1. TANK PRESSURE SWITCH
2. FILTER, ATMOSPHERIC
3. TUBE, TANK PRESSURE
4. WASHER, SHIELD
5. SHIELD, WEATHER
6. NUT, SHIELD LOCK
7. CAP, CALIBRATION SCREW

ORIENTATE AS SHOWN

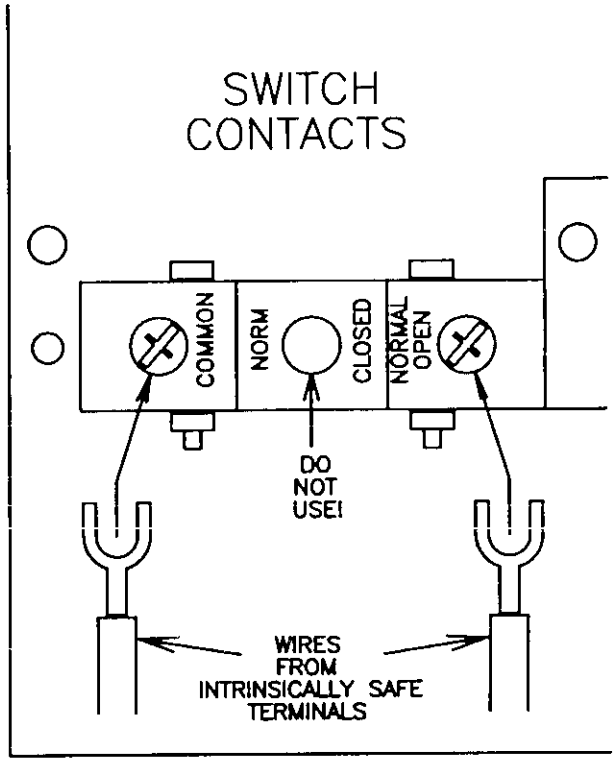

SWITCH
ELECTRICAL
CONNECTIONS

Executive Order G-70-164
Figure 2B-5
Standard Installation

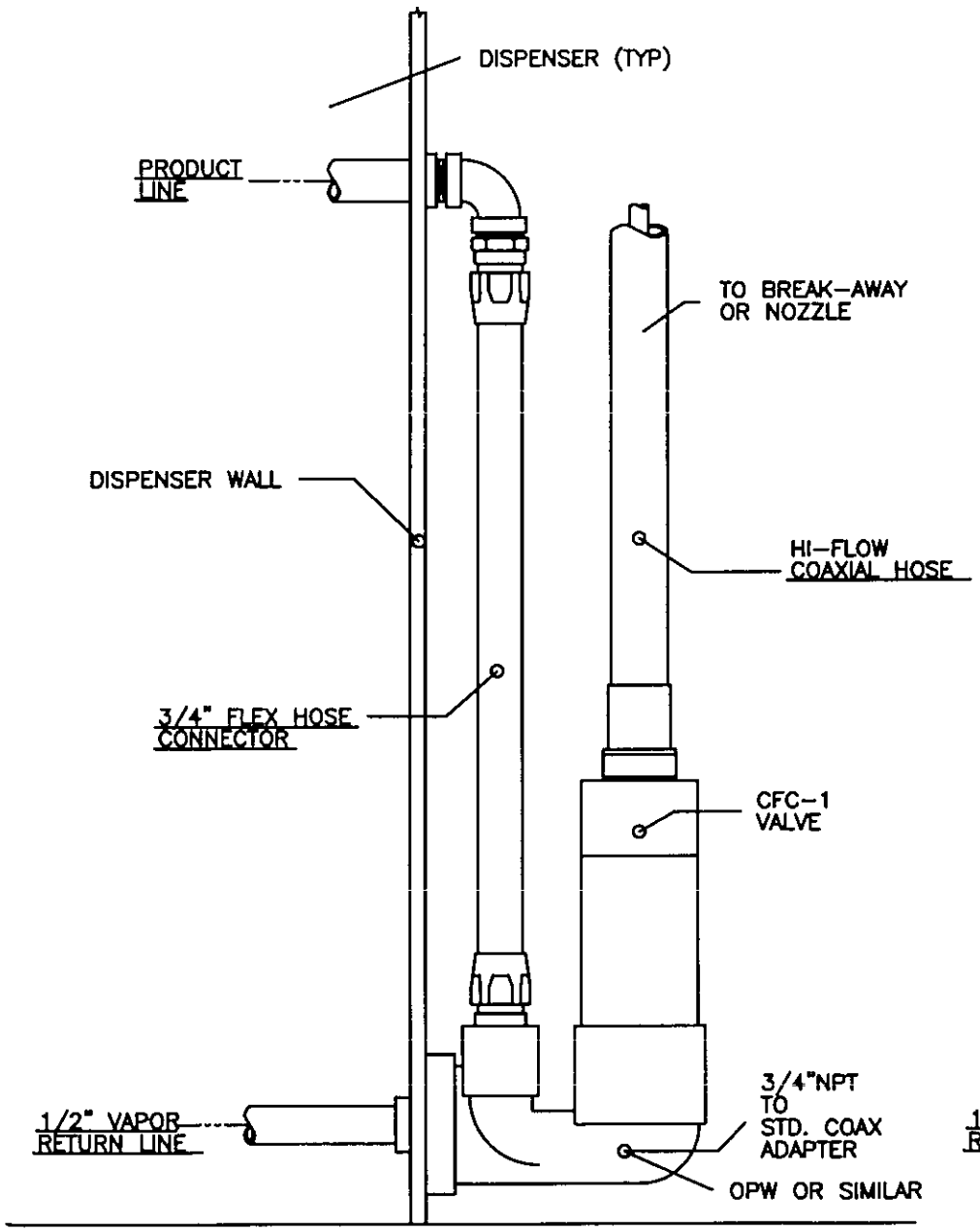

FOR STANDARD VAPOR NOZZLES

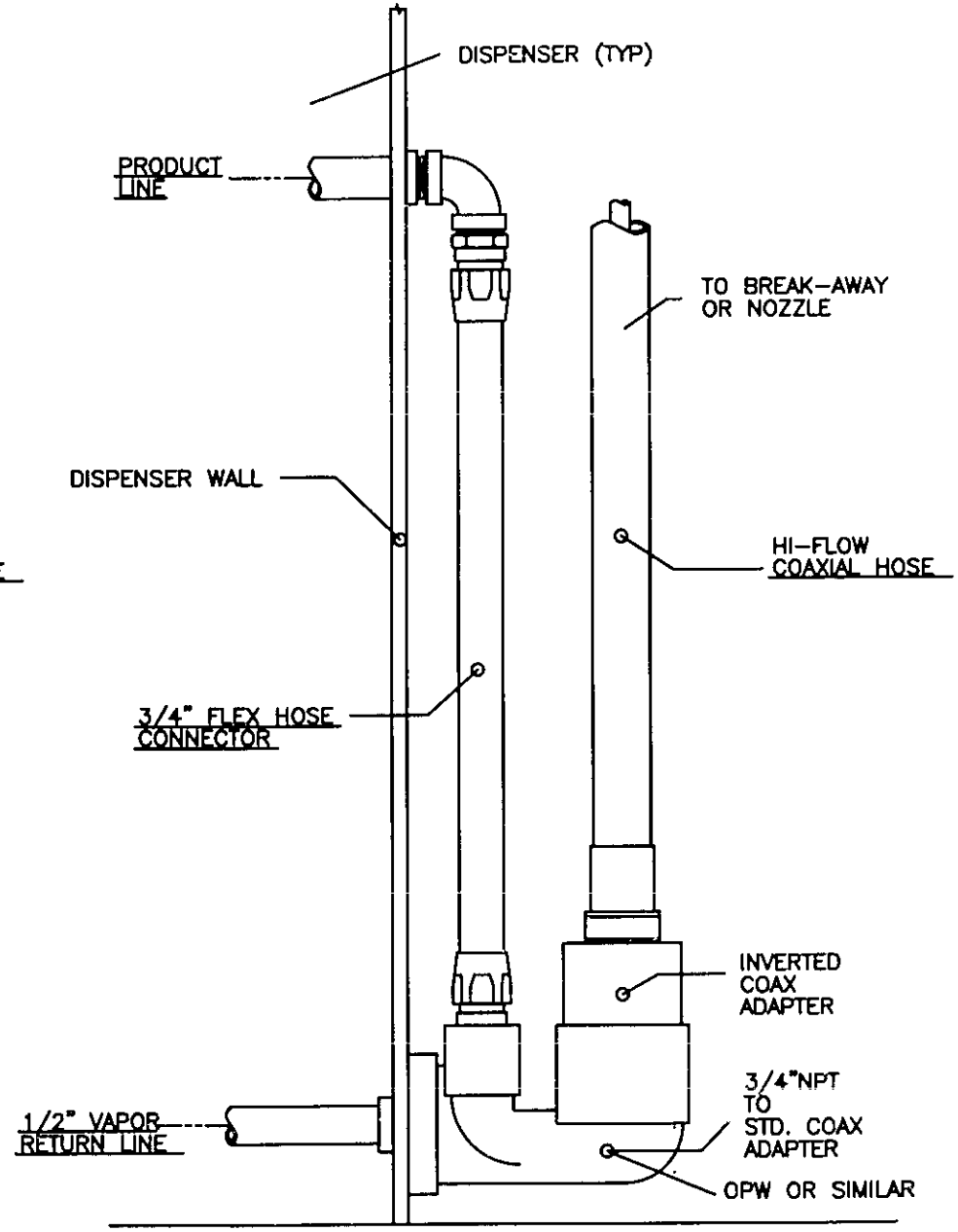

FOR INTERNAL VAPOR VALVE NOZZLES

Executive Order G-70-164
Figure 2B-6
Multi Product Dispenser Installation

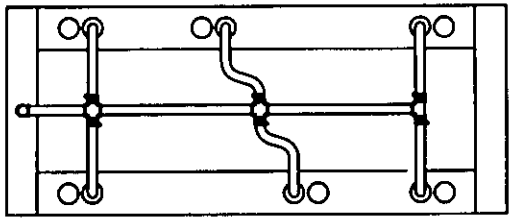

VAPOR PLUMBING LAYOUT (TYP)

NOTE:

ONLY VAPOR LINES SHOWN FOR CLARITY

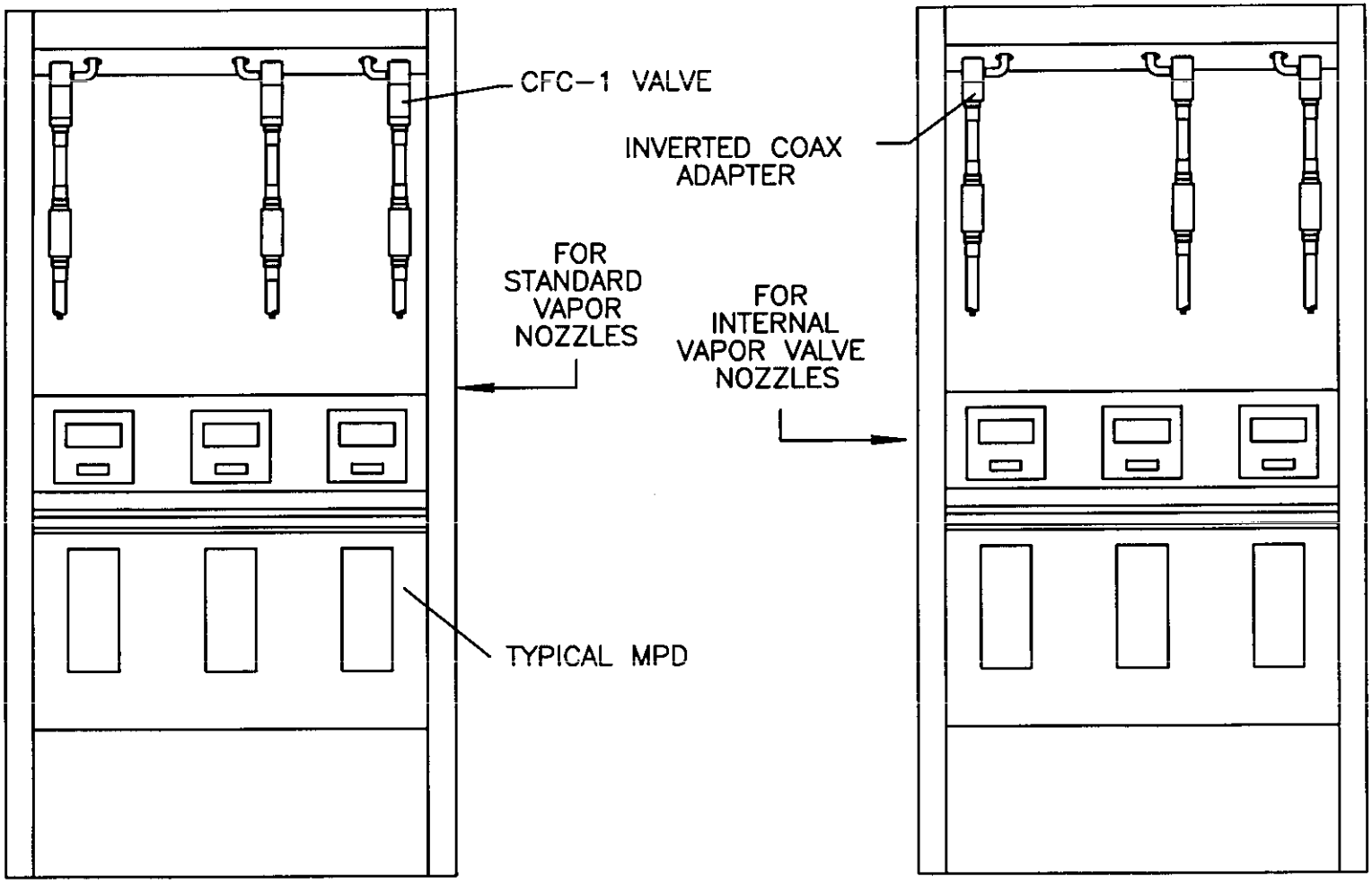

Executive Order G-70-164
Figure 2B-7
Tank Stick Correction Gage

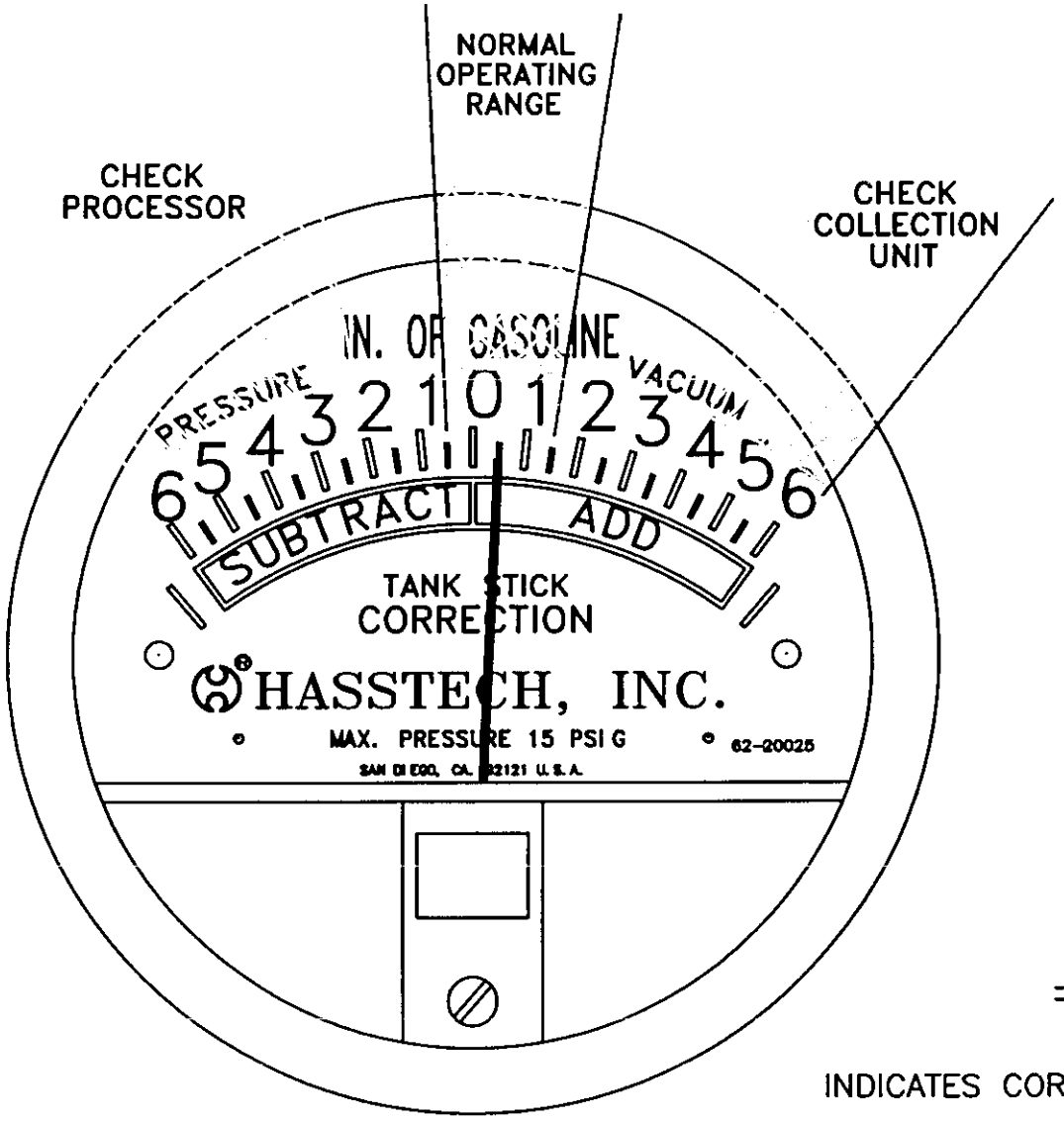

NOTE: GAUGE FACE MAY DIFFER IN DESIGN AND RANGE DISPLAYED. ANY GAUGE USED MUST REGISTER A PRESSURE OF 1" GASOLINE COLUMN (MIN) AND A VACUUM OF 2" GASOLINE COLUMN (MIN).

TANK LEVEL CORRECTION GAGE

INDICATES CORRECTION TO BE MADE TO STICK READINGS.

Executive Order G-70-164
Figure 2C-1
OPW 11VAI Nozzle

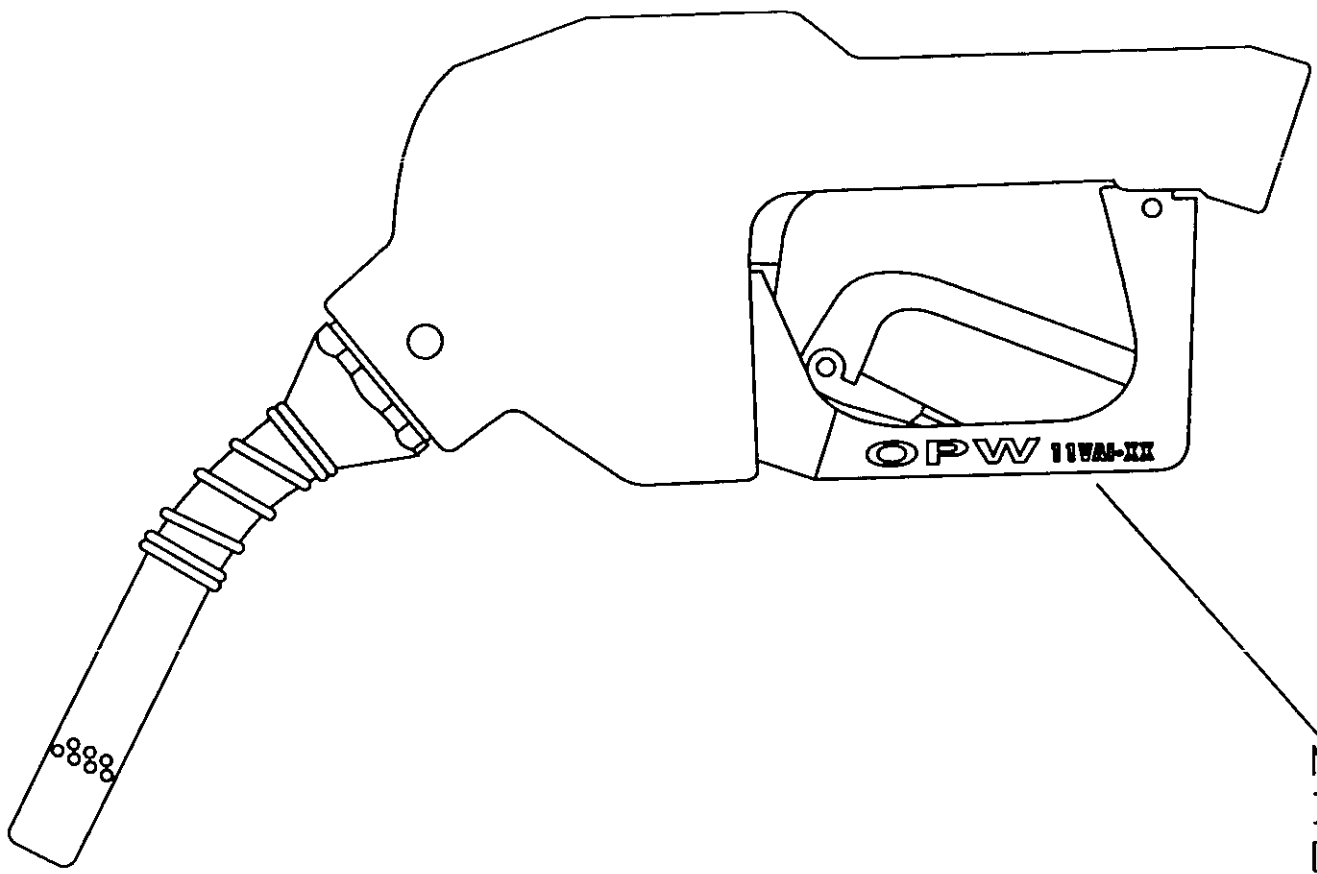

Model
Identification Number
OPW 11VAI-XX
22
27
42
47

Executive Order G-70-164
Figure 2C-2
Emco Wheaton A4500 Nozzle

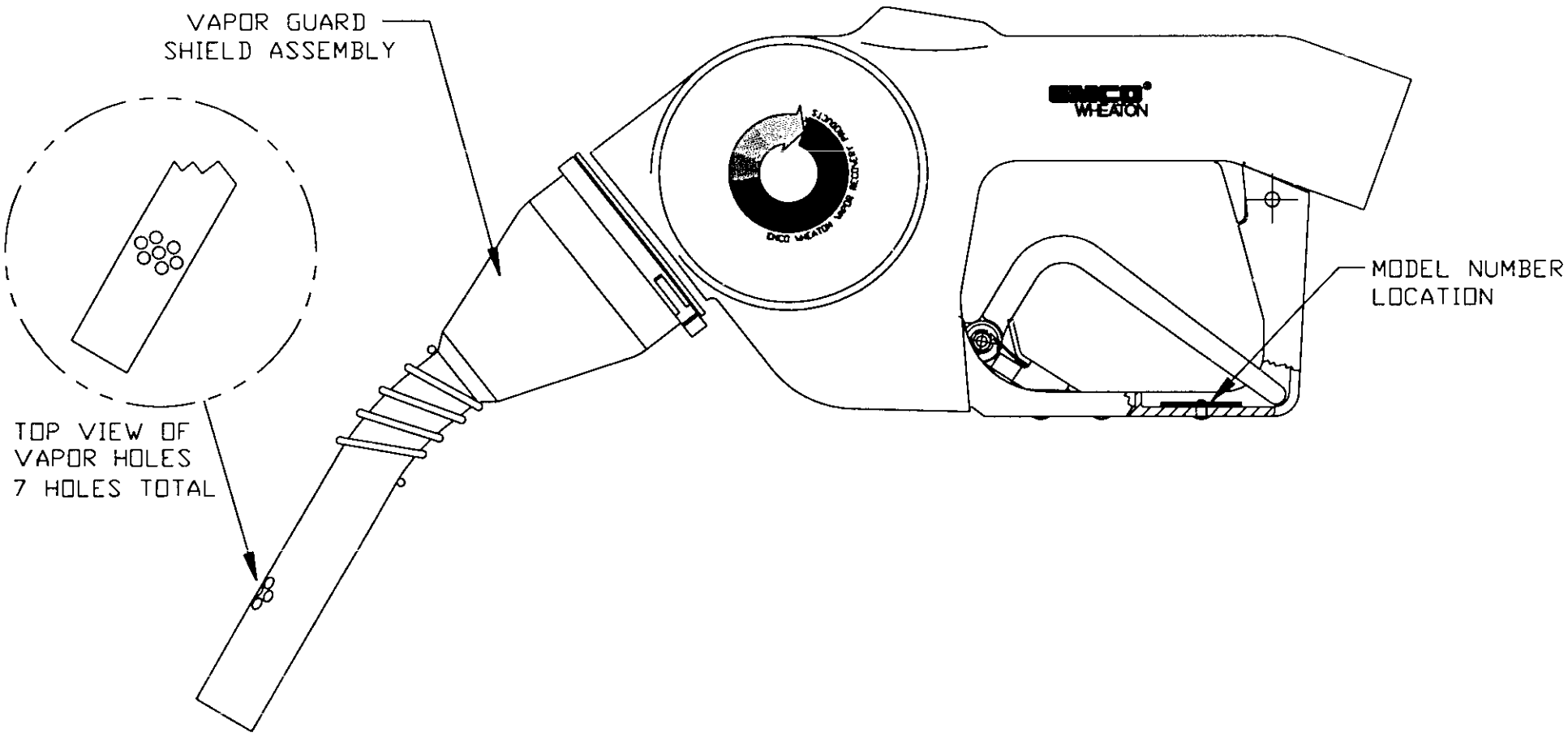

Executive Order G-70-164
Figure 2C-3
Husky Model V34 6200-8

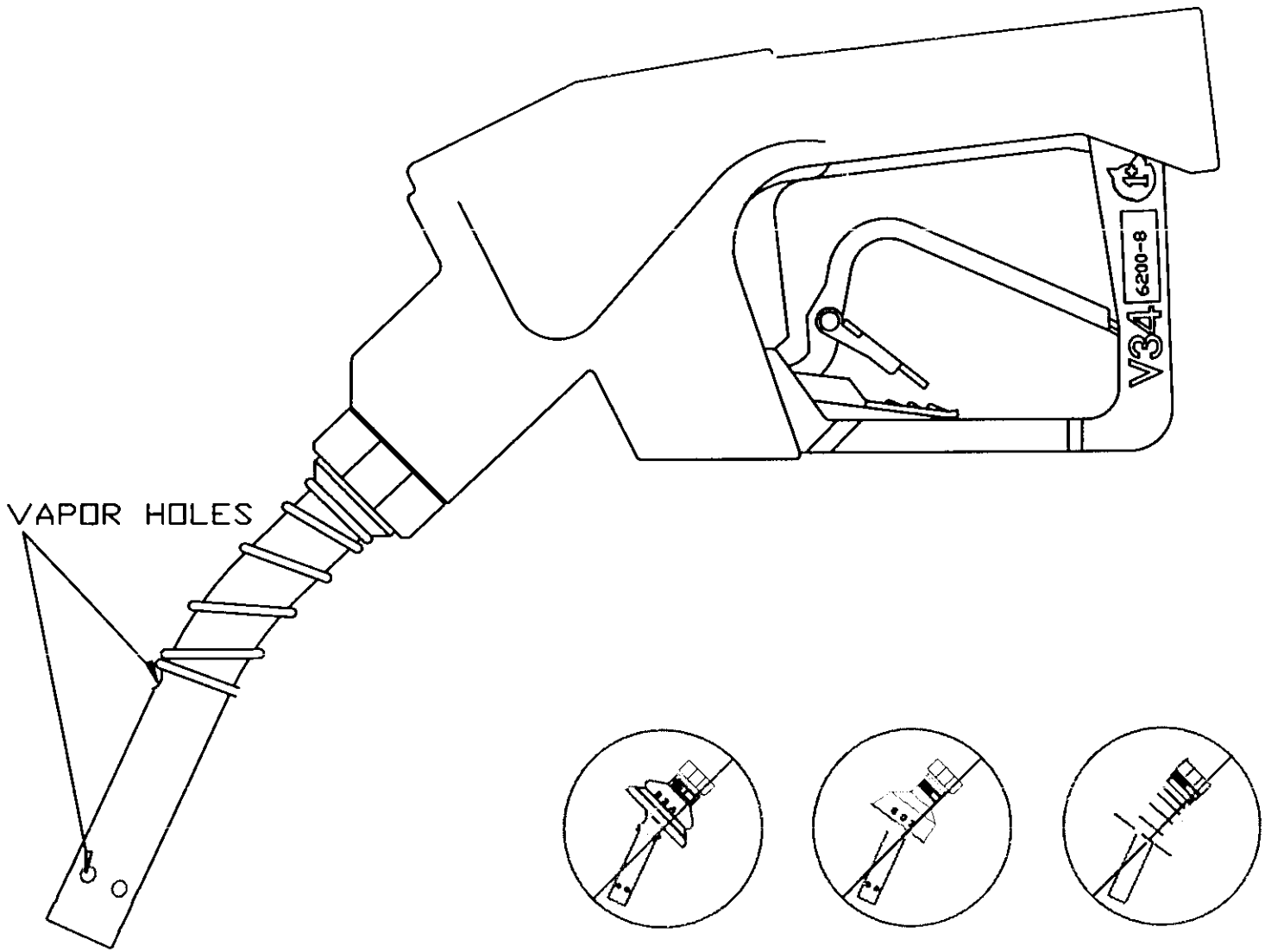

Executive Order G-70-164
Hasstech VCP-3A Phase II Vapor Recovery System
Exhibit 3
STATIC PRESSURE INTEGRITY TEST
UNDERGROUND STORAGE TANKS*

1. Applicability

1.1 This test procedure is used to quantify the vapor tightness of vapor recovery systems installed at any gasoline dispensing facility (GDF) equipped with pressure/vacuum (P/V) valves with designed pressure settings specified in Exhibit 1 of this Order. Excessive leaks in the vapor recovery system will increase the quantity of fugitive hydrocarbon emissions and lower the overall efficiencies of both the Phase I and Phase II vapor recovery systems.

2. Principle

2.1 The entire vapor recovery system is pressurized with nitrogen to two (2.0) inches H_2O. The system pressure is then allowed to decay and the pressure after five (5) minutes is compared with an allowable value. The minimum allowable five-minute final pressure is based on the system ullage and pressure decay equations. For the purpose of compliance determination, this test shall be conducted after all back-filling, paving, and installation of all Phase I and Phase II components, including P/V valves, has been completed.

2.2 For GDF equipped with a coaxial Phase I system this test shall be conducted at a Phase II vapor riser. For GDF which utilize a two-point Phase I system this test may be conducted at either a Phase II riser or a Phase I vapor coupler, provided that the criteria set forth in Section 6.8 have been met. If the integrity criteria for two-point systems specified in Section 6.8 are met, it is recommended that this test be conducted at the Phase I vapor coupler.

3. Range

3.1 If mechanical pressure gauges are employed, the full-scale range of the pressure gauges shall be 0-2.0, 0-1.0, and 0-0.50 inches H_2O column. Maximum incremental graduations of the pressure gauge shall be 0.05 inches H_2O and the minimum accuracy of the gauge shall be three percent of full scale. The minimum diameter of the pressure gauge face shall be 4 inches.

3.2 If an electronic pressure measuring device is used, the full-scale range of the device shall not exceed 0-10 inches H_2O with a minimum accuracy of 0.5 percent of full-scale. A 0-20 inches H_2O device may be used, provided the equivalent accuracy is not less than 0.25 percent of full scale.

3.3 The minimum and maximum total ullages shall be 500 and 25,000 gallons, respectively. These values are exclusive of all vapor piping volumes.

***Reference Bay Area Air Quality Management District Source Test Procedure ST-30**

3.4 The minimum and maximum nitrogen feed-rates, into the system, shall be one (1) and five (5) CFM, respectively.

4. Interferences

4.1 Introduction of nitrogen into the system at flowrates exceeding five (5) CFM may bias the results of the test toward non-compliance.

4.1 Power to the collection unit shall be turned off during testing.

5. Apparatus

5.1 Nitrogen. Use commercial grade nitrogen in a high pressure cylinder, equipped with a two-stage pressure regulator and a one psig pressure relief valve.

5.2 Pressure Measuring Device. Use 0-2.0, 0-1.0, and 0-0.50 inches H_2O pressure gauges connected in parallel, a 0-2 inches H_2O manometer, or an electronic pressure measuring device to monitor the pressure decay in the vapor recovery system. The pressure measuring device shall, at a minimum, be readable to the 0.05 inches H_2O.

5.3 "T" Connector Assembly. See Figure 3-1 for example.

Figure 3-1

"T" Connector Assembly

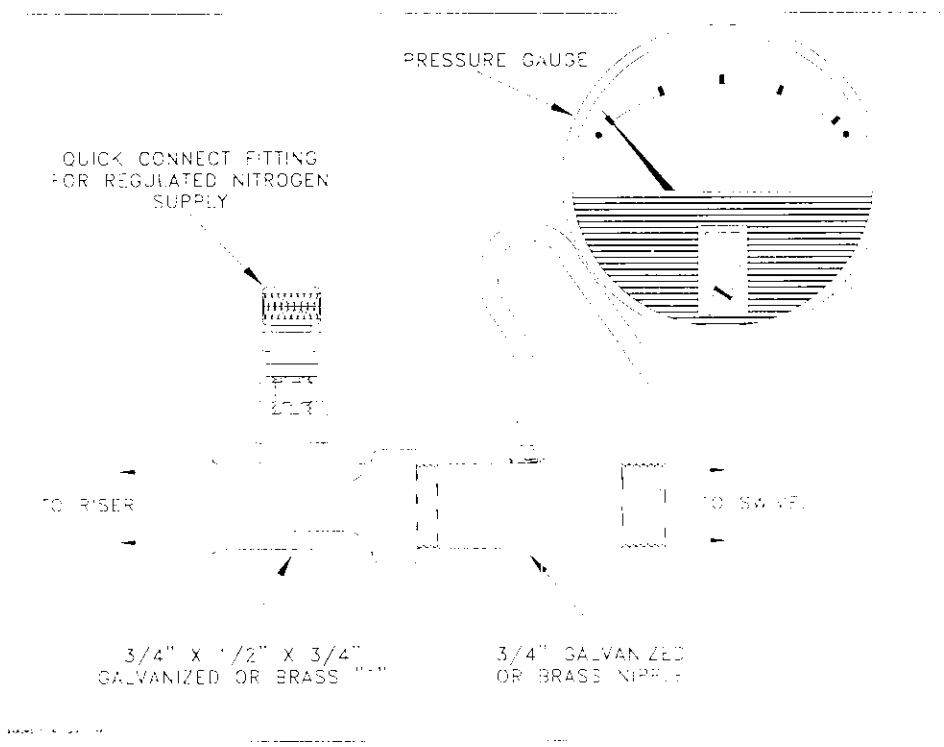

G-70-164 Exhibit 3-2

5.4 Vapor Coupler Integrity Assembly. Assemble OPW 633-A, 633-B, and 634-A adapters, or equivalent, as shown in Figure 3-2. If the test is to be conducted at the storage tank Phase I vapor coupler, this assembly shall be used prior to conducting the static leak test in order to verify the pressure integrity of the vapor poppet. The internal volume of this assembly shall not exceed 0.1 cubic feet.

Figure 3-2

Vapor Coupler Integrity Assembly

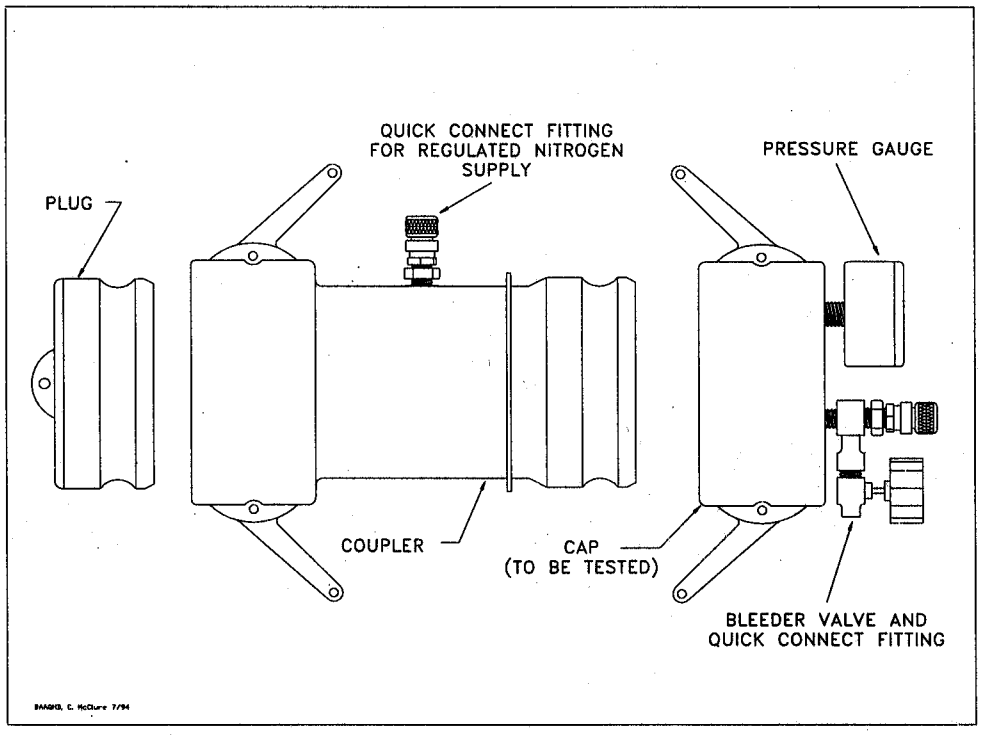

5.5 Vapor Coupler Test Assembly. Use a compatible OPW 634-B cap, or equivalent, equipped with a center probe to open the poppet, a pressure measuring device to monitor the pressure decay, and a connection for the introduction of nitrogen into the system. See Figure 3-3 for example.

5.6 Stopwatch. Use a stopwatch accurate to within 0.2 seconds.

5.7 Flowmeter. Use a Dwyer flowmeter, Model RMC-104, or equivalent, to determine the required pressure setting of the delivery pressure gauge on the nitrogen supply pressure regulator. This pressure shall be set such that the nitrogen flowrate is between 1.0 and 5.0 CFM.

5.8 Combustible Gas Detector. A Bacharach Instrument Company, Model 0023-7356, or equivalent, may be used to verify the pressure integrity of system components during this test.

5.9 Leak Detection Solution. Any liquid solution designed to detect vapor leaks may be used to verify the pressure integrity of system components during this test.

Figure 3-3

Vapor Coupler Test Assembly

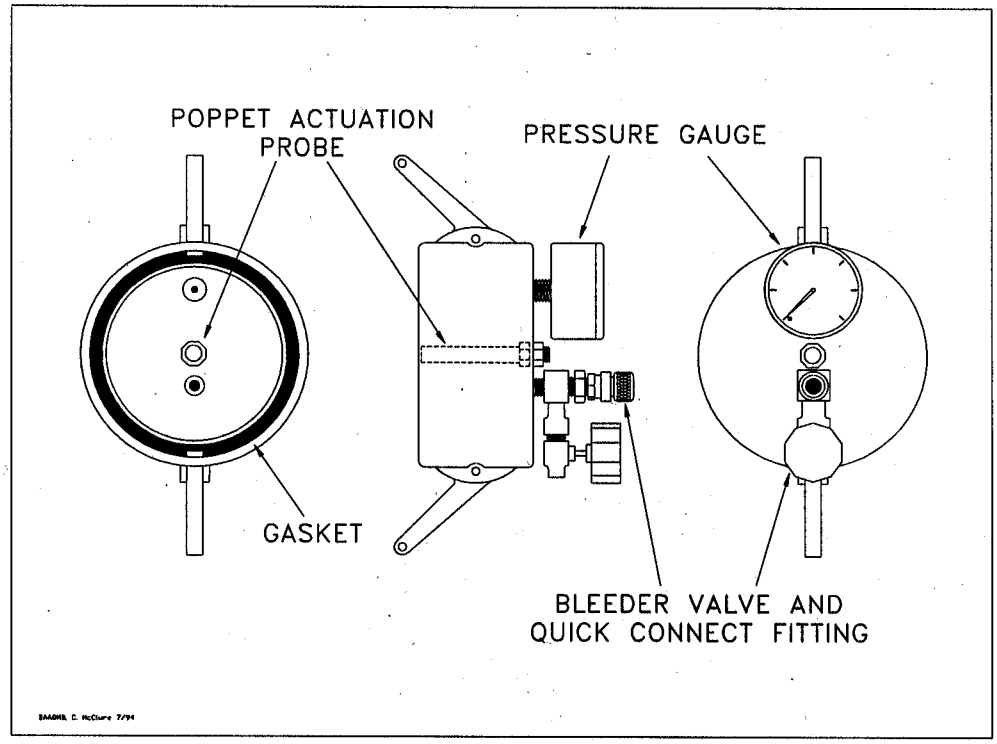

6. Pre-Test Procedures

6.1 The following safety precautions shall be followed:

6.1.1 Only nitrogen shall be used to pressurize the system.

6.1.2 A one psig relief valve shall be installed to prevent the possible over-pressurizing of the storage tank.

6.1.3 A ground strap should be employed during the introduction of nitrogen into the system.

6.2 Product dispensing shall not occur during the test. There shall have been no Phase I deliveries into or out of the storage tanks within the three hours prior to the test.

6.3 Measure the gallons of gasoline present in each underground storage tank and determine the actual capacity of each storage tank from facility records. Calculate the ullage space for each tank by subtracting the gasoline gallonage present from the actual tank capacity. The minimum ullage during the test shall be 25 percent of the tank capacity or 500 gallons, whichever is greater. The total ullage shall not exceed 25,000 gallons.

6.4 For two-point Phase I systems, this test shall be conducted with the dust cap removed from the vapor coupler. This is necessary to determine the vapor tightness of the Phase I vapor poppet. See Section 6.7 if this test is to be conducted at the Phase I vapor coupler.

6.4.1 For coaxial Phase I systems this test shall be conducted with the dust cap removed from the Phase I coupler. This is necessary to insure the vapor tightness of the Phase I vapor poppet.

6.4.2 Verify that the liquid level in the storage tank is at least four (4) inches above the highest opening at the bottom of the submerged drop tube.

6.5 If the Phase I containment box is equipped with a drain valve, the valve assembly may be cleaned and lubricated prior to the test. This test shall, however, be conducted with the drain valve installed and the manhole cover removed. See subsection 7.4.1 for further details regarding containment box drain valves.

6.6 If the test is to be conducted at a Phase II vapor riser, disconnect the dispenser end of one vapor recovery hose and install the "T" connector assembly (see Figure 3-1). Connect the nitrogen gas supply (do not use air) and the pressure measuring device to the "T" connector.

6.6.1 For those Phase II systems utilizing a dispenser mounted remote vapor check valve, the "T" connector assembly shall be installed on the vapor riser side of the check valve.

6.7 If this test is to be conducted at the Phase I vapor coupler on a two-point Phase I system, the procedures set forth in subsections 6.7.1 and 6.7.2 shall be successfully completed prior to testing. The static pressure integrity test shall not be conducted at the Phase I coupler at facilities equipped with coaxial Phase I systems.

6.7.1 Connect the Vapor Coupler Integrity Assembly to the Phase I vapor coupler. Connect the Vapor Coupler Test Assembly. Connect the nitrogen supply to the assembly and carefully pressurize the internal volume of the assembly to two (2.0) inches H_2O. Start the stopwatch. Record the final pressure after one minute.

6.7.2 If the pressure after one minute is less than 0.25 inches H_2O, the leak rate through the Phase I vapor poppet precludes conducting the static leak test at this location. If the pressure after one minute is greater than or equal to 0.25 inches H_2O, the static leak test may be conducted at this location. This criteria assures a maximum leak rate through the Phase I vapor poppet of less than 0.0004 cubic feet per minute.

6.7.3 Disconnect the Vapor Coupler Integrity Assembly from the Phase I vapor coupler. If the requirements of subsection 6.7.2 were met, install the Vapor Coupler Test Assembly to the Phase I vapor coupler.

6.8 All pressure measuring device(s) shall be bench calibrated using either a reference gauge or incline manometer. Calibration shall be performed at 20, 50, and 80 percent of full scale. Accuracy shall be within two percent at each of these calibration points. Calibrations shall be conducted on a frequency not to exceed 90 days.

6.9 Use the flowmeter to determine the nitrogen regulator delivery pressures which correspond to nitrogen flowrates of 1.0 and 5.0 CFM. These pressures define the allowable range of delivery pressures acceptable for this test procedure. Also record which regulator delivery pressure setting, and the corresponding nitrogen flowrate, will be used during the test. As an alternative, the flowmeter may be connected, in-line between the nitrogen supply regulator and Vapor Coupler Test Assembly, during the test.

6.10 Use Equation 9.3 to calculate the approximate time required to pressurize the system ullage to the initial starting pressure of two (2.0) inches H_2O. This will allow the tester to minimize the quantity of nitrogen introduced into those systems which cannot comply with the static leak standards.

6.11 Attach the Vapor Coupler Test assembly to the Phase I poppet or the "T" connector assembly to the Phase II vapor riser. Read the initial pressure of the storage tank and underground piping. If the initial pressure is greater than 0.5 inches H_2O, carefully bleed off the pressure, in accordance with all applicable safety procedures, in the storage tank and underground piping to less than 0.5 inches H_2O column.

7. Testing

7.1 Open the nitrogen gas supply valve and set the regulator delivery pressure within the allowable range determined in Section 6.9, and start the stopwatch. Pressurize the vapor system (or subsystem for individual vapor return line systems) to **at least 2.2 inches H_2O** initial pressure. It is critical to maintain the nitrogen flow until the pressure stabilizes, indicating temperature and vapor pressure stabilization in the tanks. Check the test equipment using leak detecting solution or a combustible gas detector to verify that all test equipment is leak tight.

7.1.1 If the time required to achieve the initial pressure of two (2.0) inches H_2O exceeds twice the time derived from Equation 9.3, stop the test and use liquid leak detector, or a combustible gas detector, to find the leak(s) in the system. Failure to achieve the initial starting pressure within twice the time derived from Equation 9.3 demonstrates the inability of the system to meet the performance criteria. Repair or replace the faulty component(s) and restart the test pursuant to Section 7.1.

7.2 Close and disconnect the nitrogen supply. Start the stopwatch when the pressure has decreased to the initial starting pressure of two (2.0) inch H_2O.

7.3 At one-minute intervals during the test, record the system pressure. After five minutes, record the final system pressure. See Table 3-I (or Equation 9.1) to determine the acceptability of the final system static pressure results. For intermediate values of ullage in Tables 3-I, linear interpolation may be employed.

7.4 If the system failed to meet the criteria set forth in Table 3-I (or the appropriate equation in Section 9), repressurize the system and check all accessible vapor connections using leak detector solution or a combustible gas detector. If vapor leaks in the system are encountered, repair or replace the defective component and repeat the test. Potential sources of leaks include nozzle check valves, pressure/vacuum relief valves, containment box drain valve assemblies, and plumbing connections at the risers.

7.4.1 If the facility fails to comply with the static leak test standards and the Phase I system utilizes a non-CARB-certified drain valve equipped containment box, which was installed prior to July 1, 1992, for which a CARB-certified replacement drain valve assembly is not marketed, the following two subsections shall apply:

7.4.1.1 The drain valve may be removed and the port plugged. Reset the system. If the facility complies with the static leak test standards under these conditions, the facility shall be considered complying with the requirements, provided that the manufacturer and model number of the containment box and the date of installation are submitted with the test results.

7.4.1.2 The criteria set forth in subsection 7.4.1.1 shall not apply after July 1, 1996.

7.5 After the remaining system pressure has been relieved, remove the "T" connector assembly and reconnect the vapor recovery hose, if applicable.

7.6 If the vapor recovery system utilizes individual vapor return lines, repeat the leak test for each gasoline grade. Avoid leaving any vapor return line open longer than is necessary to install or remove the "T" connector assembly.

7.7 If a containment box with a cover-actuated drain valve is installed, repeat the test with the cover in place. In these cases clearly specify, on Form 3-1, which results represent the pressure integrity with and without the cover in place.

8. Post-Test Procedures

8.1 Use Table 3-I or, or Equations 9.1, to determine the compliance status of the facility by comparing the final five-minute pressure with the minimum allowable final pressure.

9. Calculations

9.1 The minimum allowable five-minute final pressure, with an initial pressure of two (2.0) inches H_2O, shall be calculated as follows:

[Equation 9-1]

$$P_f = 2e^{\frac{-500.887}{V}} \qquad \text{if N = 1-6}$$

$$P_f = 2e^{\frac{-531.614}{V}} \qquad \text{if N = 7-12}$$

$$P_f = 2e^{\frac{-562.455}{V}} \qquad \text{if N = 13-18}$$

$$P_f = 2e^{\frac{-593.412}{V}} \qquad \text{if N = 19-24}$$

$$P_f = 2e^{\frac{-624.483}{V}} \qquad \text{if N > 24}$$

Where:

N = The number of affected nozzles. For manifolded systems, N equals the total number of nozzles. For dedicated plumbing configurations, N equals the number of nozzles serviced by the tank being tested.

P_f = The minimum allowable five-minute final pressure, inches H_2O

e = A dimensionless constant approximately equal to 2.718

2 = The initial starting pressure, inches H_2O

9.2 The minimum time required to pressure the system ullage from zero (0) to two (2.0) inches H_2O gauge pressure shall be calculated as follows:

$$t_2 = \frac{V}{[1522]F} \qquad \text{[Equation 9-2]}$$

Where:

t_2	=	The minimum time to pressurize the ullage to two inches H_2O, minutes
V	=	The total ullage affected by the test, gallons
F	=	The nitrogen flowrate into the system, CFM
1522	=	The conversion factor for pressure and gallons

9.3 If the policy of the local district requires an allowable tolerance for testing error, the minimum allowable five-minute final pressure, including testing error, shall be calculated as follows:

$$P_{f\text{-}E} = 2 - \left[1 + \left(\frac{E}{100}\right)\right]\left[408.9 - \left(P_f + 406.9\right)\right] \qquad \text{[Equation 9-3]}$$

Where:

$P_{f\text{-}E}$	=	The minimum allowable five-minute final pressure including allowable testing error, inches H_2O
E	=	The allowable testing error, percent
P_f	=	The minimum allowable five-minute final pressure calculated in Equations 9-1 or 9-2, inches H_2O
2	=	The initial starting pressure, inches H_2O
408.9	=	Atmospheric pressure plus the initial starting pressure, inches H_2O
406.9	=	Atmospheric pressure, inches H_2O

10. Reporting

10.1 The calculated ullage and system pressures for each five-minute vapor recovery system test shall be reported as shown in Form 3-1. Be sure to include the Phase I system type (two-point or coaxial), the Phase II system type, whether the system is manifolded, and the one-minute pressures during the test.

Executive Order G-70-164

TABLE 3-1

PRESSURE DECAY LEAK RATE CRITERIA

INITIAL PRESSURE OF 2 INCHES OF H_2O

MINIMUM PRESSURE AFTER 5 MINUTES, INCHES OF H_2O

ULLAGE, GALLONS	NUMBER OF AFFECTED NOZZLES 01-06	07-12	13-18	19-24	> 24
500	**0.73**	**0.69**	**0.65**	**0.61**	**0.57**
550	0.80	0.76	0.72	0.68	0.64
600	**0.87**	**0.82**	**0.78**	**0.74**	**0.71**
650	0.93	0.88	0.84	0.80	0.77
700	**0.98**	**0.94**	**0.90**	**0.86**	**0.82**
750	1.03	0.98	0.94	0.91	0.87
800	**1.07**	**1.03**	**0.99**	**0.95**	**0.92**
850	1.11	1.07	1.03	1.00	0.96
900	**1.15**	**1.11**	**1.07**	**1.03**	**1.00**
950	1.18	1.14	1.11	1.07	1.04
1,000	**1.21**	**1.18**	**1.14**	**1.10**	**1.07**
1,200	1.32	1.28	1.25	1.22	1.19
1,400	**1.40**	**1.37**	**1.34**	**1.31**	**1.28**
1,600	1.46	1.43	1.41	1.38	1.35
1,800	**1.51**	**1.49**	**1.46**	**1.44**	**1.41**
2,000	1.56	1.53	1.51	1.49	1.46
2,200	**1.59**	**1.57**	**1.55**	**1.53**	**1.51**
2,400	1.62	1.60	1.58	1.56	1.54
2,600	**1.65**	**1.63**	**1.61**	**1.59**	**1.57**
2,800	1.67	1.65	1.64	1.62	1.60
3,000	**1.69**	**1.68**	**1.66**	**1.64**	**1.62**
3,500	1.73	1.72	1.70	1.69	1.67
4,000	**1.76**	**1.75**	**1.74**	**1.72**	**1.71**
4,500	1.79	1.78	1.77	1.75	1.74
5,000	**1.81**	**1.80**	**1.79**	**1.78**	**1.77**
6,000	1.84	1.83	1.82	1.81	1.80
7,000	**1.86**	**1.85**	**1.85**	**1.84**	**1.83**
8,000	1.88	1.87	1.86	1.86	1.85
9,000	**1.89**	**1.89**	**1.88**	**1.87**	**1.87**
10,000	1.90	1.90	1.89	1.88	1.88
15,000	**1.93**	**1.93**	**1.93**	**1.92**	**1.92**
20,000	1.95	1.95	1.94	1.94	1.94
25,000	**1.96**	**1.96**	**1.96**	**1.95**	**1.95**

Note: For manifolded Phase II Systems, the **"Number of Affected Nozzles"** shall be the total of all gasoline nozzles. For dedicated return configurations, the **"Number of Affected Nozzles"** shall be the total of those nozzles served by the tank being tested.

Distribution:	Executive Order G-70-164 FORM 3-1 **Summary of Source Test Results**	Report No.: _____ Test Date: _____ Test Times: Run A: _____ Run B: _____ Run C: _____

Source Information		Facility Parameters
GDF Name and Address	GDF Representative and Title	PHASE II EQUIPMENT System:
	GDF Phone No. ( )	NOZZLE Type/Number
	Source: GDF Vapor Recovery System	Comments
Permit Conditions	GDF # _____ A/C # _____	Manifolded? Y or N

Operating Parameters:

Number of Nozzles Served by Tank #1 _____ Number of Nozzles Served by Tank #3 _____

Number of Nozzles Served by Tank #2 _____ Total Number of Gas Nozzles at Facilty _____

Applicable Regualtions:	FOR OFFICE USE ONLY

Source Test Results and Comments:

TANK #:	1	2	3	TOTAL
1. Product Grade				
2. Actual Tank Capacity, gallons				
3. Gasoline Volume, Gallons				
4. Ullage, gallons (#2 -#3)				
5. Phase I System Type				
6. Initial Test Pressure, Inches H_2O **(2.0)**				
7. Pressure After 1 Minute, Inches H_2O				
8. Pressure After 2 Minutes, Inches H_2O				
9. Pressure After 3 Minutes, Inches H_2O				
10. Pressure After 4 Minutes, Inches H_2O				
11. **Final Pressure After 5 Minutes, Inches H_2O**				
12. Allowable Final Pressure from Table 30-I				
13. Test Status **[Pass or Fail]**				

Test Conducted by:	Test Company Name _____ Address _____ City _____	Date and Time of Test: