GROUND MOUNTED VAPOR RECOVERY SYSTEM

** TABLE OF DISTANCES & HEIGHTS

DISTANCE FROM TANK VENTS OR FUEL TRANSFER POINTS	MINIMUM HEIGHT ABOVE GRADE
NOT LESS THAN 20 FEET	48 INCHES
30 FEET	42 INCHES
40 FEET	30 INCHES
50 FEET	18 INCHES
> 50 FEET	6 INCHES

NOTE: IGNITION SOURCE AT PROCESSOR IS 12 INCHES ABOVE BASE.

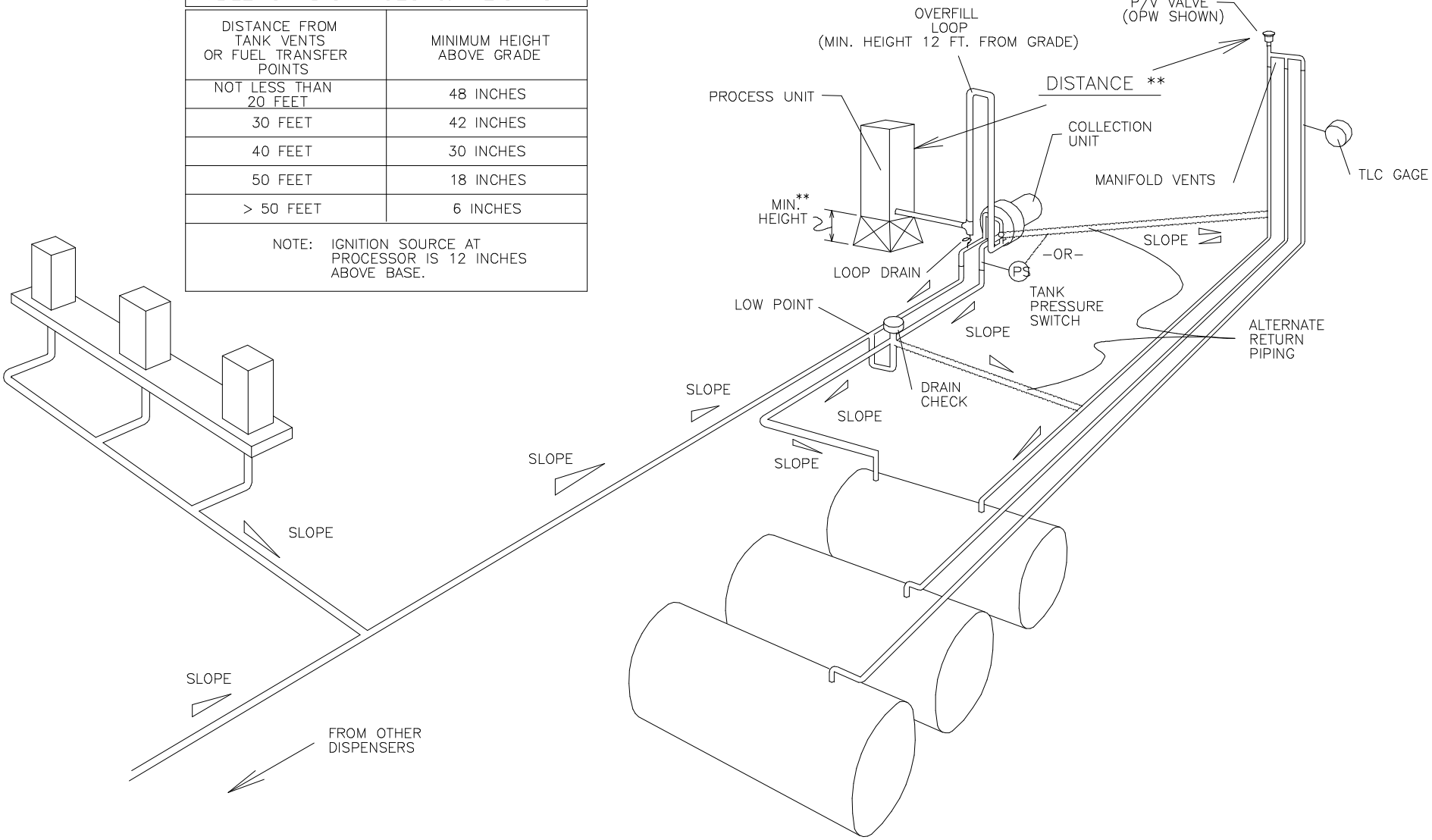

Executive Order G-70-164-AA
Figure 2
Pad Mounted Collection / Processing