State of California
AIR RESOURCES BOARD

Executive Order G-70-165

Certification of the
Healy Vacuum Assist Phase II Vapor Recovery System
with the Model 600 Nozzle

WHEREAS, the California Air Resources Board ("the Board" or "CARB") has established, pursuant to California Health and Safety Code Sections 39600, 39601 and 41954, certification procedures for systems designed for the control of gasoline vapor emissions during motor vehicle fueling operations (Phase II vapor recovery systems) in its "Certification Procedures for Gasoline Vapor Recovery Systems at Service Stations" (the "Certification Procedures") as last amended December 4, 1981, incorporated by reference into Title 17, California Code of Regulations, Section 94001;

WHEREAS, the Board has established, pursuant to California Health and Safety Code Sections 39600, 39601 and 41954, test procedures for determining the compliance of Phase II vapor recovery systems with emission standards in its "Test Procedures for Determining the Efficiency of Gasoline Vapor Recovery Systems at Service Stations" (the "Test Procedures") as last amended September 1, 1982, incorporated by reference into Title 17, California Code of Regulations, Section 94000;

WHEREAS, James W. Healy of Healy Systems, Incorporated ("Healy"), requested and was granted certification of a modified Healy Phase II vapor recovery system with Model 200 and 400 nozzles on June 23, 1992, by Executive Order G-70-70-AC;

WHEREAS, James W. Healy of Healy Systems, Incorporated ("Healy") has requested certification of the Healy vapor recovery system with the Model 600 nozzle and three alternative vacuum units ("Healy Model 600 system") pursuant to the Certification Procedures and Test Procedures;

WHEREAS, the Healy Model 600 system has been evaluated pursuant to the Board's Certification Procedures;

WHEREAS, Section VIII-A of the Certification Procedures provides that the Executive Officer shall issue an order of certification if he or she determines that the vapor recovery system conforms to all of the requirements set forth in Sections I through VII of the Certification Procedures; and

WHEREAS, I, James D. Boyd, Air Resources Board Executive Officer, find that the Healy Model 600 system conforms with all the requirements set forth in Sections I through VII of the Certification Procedures, and results in a vapor recovery system which is at least 95 percent effective for attendant and/or self-serve use at gasoline service stations when used in conjunction with a Phase I vapor recovery system which has been certified by the Board.

NOW, THEREFORE, IT IS HEREBY ORDERED that the Healy Model 600 system is certified to be at least 95 percent effective in attended and/or self-service mode when used with a CARB-certified Phase I system, as specified in Exhibits 1 and 2 of this Order. Fugitive emissions which may occur when the underground storage tanks are under positive pressure have not been quantified and were not included in the calculation of system effectiveness. Exhibit 1 contains a list of the equipment certified for use with the Healy Model 600 system. Exhibit 2 contains installation and performance specifications for the system. Exhibit 3 contains a static pressure decay test for the entire facility. Exhibit 4 contains a static pressure decay test specifically for the portion of the system which is subjected to high vacuum levels.

IT IS FURTHER ORDERED that the dispensing rate for installations of the Healy Model 600 system shall not exceed ten (10.0) gallons per minute when only one nozzle associated with the product supply pump is operating. This is consistent with the flowrate limitation imposed by United States Environmental Protection Agency as specified in the Federal Register, Volume 58, Number 55, page 16019.

IT IS FURTHER ORDERED that compliance with the certification requirements and rules and regulations of the Division of Measurement Standards of the Department of Food and Agriculture, the State Fire Marshal's Office, and the Division of Occupational Safety and Health of the Department of Industrial Relations is made a condition of this certification.

IT IS FURTHER ORDERED that the following requirements are made a condition of certification. The Healy System using the Model 600 nozzle shall be installed only in facilities which are capable of demonstrating compliance with the vapor integrity requirements contained in Exhibits 3 and 4 of this Order. The owner or operator of the installation shall conduct, and pass, these tests at least once in each twelve month period, and the results shall be made available to the district upon request within fifteen days after the test is conducted, or within fifteen days of the request. Alternative test procedures may be used if determined by the Executive Officer to yield comparable results.

IT IS FURTHER ORDERED that all nozzles approved for use with the Healy system shall be 100 percent performance checked at the factory including and checks of the integrity of the vapor path, as specified in Exhibit 2 of this Order, and proper functioning of all automatic shut-off mechanisms.

IT IS FURTHER ORDERED that the certified Healy system shall be warranted in writing, for at least one year, to the ultimate purchaser and each subsequent purchaser, that the vapor recovery system is designed, built and equipped so as to conform at the time of original installation or sale with the applicable regulations and is free from defects in materials and workmanship which would cause the vapor recovery system to fail to conform with applicable regulations. Copies of the manufacturer's warranty for the Healy system shall be made available to the station manager, owner or operator. Hoses, nozzles and breakaway couplings shall be warranted to the ultimate purchaser as specified above for at least one year, or for the expected useful life, whichever is longer.

IT IS FURTHER ORDERED that the certified Healy system shall, at a minimum, be operated in accordance with the manufacturer's recommended maintenance intervals and shall use the manufacturer's recommended operation, installation, and maintenance procedures.

IT IS FURTHER ORDERED that each vapor pump shall be adjusted and 100 percent performance checked at the factory, including verification that the vapor recovery system performance is within the range specified in Exhibit 2 of this Order. Vapor pumps sold separately as replacement parts shall be tested after field installation to verify that the vapor recovery system performance is within the range specified in Exhibit 2.

IT IS FURTHER ORDERED that all Healy Model 600 system installations shall, no later than July 1, 1996, have a CARB-certified Testing/Monitoring System which meets the requirements in Exhibit 2 of this Order.

IT IS FURTHER ORDERED that, within sixty days after the Testing/Monitoring System is certified by CARB, Healy shall retrofit all Healy Model 600 systems which were installed prior to that date with the CARB-certified System.

IT IS FURTHER ORDERED that the system, as installed, shall comply with the procedures and performance standards the test installation was required to meet during certification testing. Local districts may adopt stricter procedures or performance standards in accordance with the California Health and Safety Code section 41954 (g). Failure to demonstrate compliance with procedures or performance standards stricter than those imposed during certification testing does not constitute failure of the Healy system to meet the terms and conditions of this Executive Order. If, in the judgment of the Executive Officer, a significant fraction of installations fail to meet the specifications of this certification, or if a significant portion of the vehicle population is found to have configurations which significantly impair the system's collection efficiency, the certification itself may be subject to modification, suspension or revocation.

IT IS FURTHER ORDERED that the certified Healy system shall be performance tested during installation for ability to dispense gasoline and collect vapors without difficulty, in the presence of the station manager or other responsible individual. The station manager, owner or operator shall also be provided with instructions in the proper use of the Healy system, its repair and maintenance, where system and/or component replacements can be readily obtained, and shall be provided with copies of the installation and maintenance manuals for the Healy system to be maintained at the station.

IT IS FURTHER ORDERED that any alteration of the equipment, parts, design, or operation of the systems certified hereby is prohibited, and deemed inconsistent with this certification, unless such alteration has been approved by the Executive Officer or his/her designee.

Executed at Sacramento, California this 20 day of April, 1995.

James D. Boyd
Executive Officer

Attachments

Executive Order G-70-165

Exhibit 1
Healy Model 600 System Equipment List

Component	Manufacturer/Model	State Fire Marshal Identification Number
Nozzles	Model 600 (Figure 2C-1) (with vapor valve)	005:027:018
Vapor Pumps (Collection Unit)	Model 2000C Blower (1 hp) (No bypass vacuum regulation)	005:027:014
	Thomas Industries VP 500 Vane Pump (1/2 hp)	005:027:017
	9000-01, -02 Mini-Jet Pump (non-electric gasoline-driven pump)	005:027:009
Inverted Coaxial Hoses	Healy Model 75B (3/4" I. D.)	005:027:003 005:027:004
	Healy Model 88B (7/8" I. D.)	005:027:005
	OR Any inverted coaxial hose CARB-certified for use with the Healy Model 600 system.	
Hose Adapters	Healy Model series CX6- followed by suffix letter(s) "G", "D", "U", "VV1", "VV2", "VV3", "TCSVV", "DWVV" "VV1A", "VV2A", "VV3A", "TCSVVA", "DWVVA"	005:027:019
	Note: The "A" indicates that no valve is provided in the fitting because the vapor valve is integrated into the nozzle.	
	"G" Gilbarco Dispensers "D" Dresser/Wayne Dispensers "U" Universal Dispensers "VV1" Dispensers-Lowboy (with vapor valve) "VV2" Vapor Ready Balance Type "VV3" Universal Dispensers "TCSVV" Tokheim Dispensers "DWVV" Dresser/Wayne Dispensers	

Pressure/Vacuum Valves	OPW 523LP, 523LPS (settings as specified below)	005:008:051
	Hazlett H-PVB-1 Gold label (settings as specified below)	005:017:004
	OR Any CARB-certified valve with the following pressure and vacuum settings, in inches water column (wc): Pressure: three plus or minus one-half inches (3.0 ± 0.5") wc. Vacuum: eight plus or minus two inches (8 ± 2") wc.	
Vacuum Monitor with Pressure Switch	Vacuum Monitor Model 6169 Pressure Switch Model 93928	005:027:015
Breakaway Couplings (optional component)	Healy Model 8701VV	005:027:016
	OR Any breakaway coupling with a vapor valve which is CARB-certified for use with the Healy Model 600 system	

Executive Order G-70-165

Exhibit 2

Specifications for the Healy Model 600 System

Typical installations of the Healy system are shown in Figures 2A-1 through 2A-6.

Nozzle

1. A vapor guard shall be installed on the nozzle at the base of the spout, as shown in Figure 2C. Any nozzle with a vapor guard which is missing, or which is damaged such that a slit from the outer edge of the open end flange to the spout anchor clamp, or which has a equivalent cumulative damage, is defective and shall be immediately removed from service.

2. Failure mode testing demonstrated that blockage of vapor collection holes in the spout has negligible effect on the operation of the system until 4 or more of the 8 holes are blocked. Any nozzle which has fewer than four unblocked holes is defective, and shall be immediately tagged or locked out of service until repaired or replaced.

3. The Healy Model 600 nozzle has an integral vapor valve which prevents the loss of vapor from the underground storage tanks, ensures proper operation of the system and prevents the ingestion of air into the system. Any nozzle with a defective vapor valve shall be immediately removed from service. The integrity of the system shall be restored by replacing the nozzle or otherwise closing the vapor path as soon as practicable.

   Note: The Healy system generates a high vacuum level in the vapor return lines. Any leak which causes air ingestion into the system may cause increased pressure and excessive venting. Refer to the section entitled "Tank Pressure."

4. Nozzles shall be 100 percent performance checked at the factory, including checks of all shutoff mechanisms and of the integrity of the vapor path. The maximum allowable leak rate for the nozzle vapor path shall not exceed the following:

   0.038 CFH at a pressure of two inches water column (2" wc), and
   0.005 CFH at a vacuum of eighty three inches water column (approx 3 psi).

5. Leaded and unleaded spouts are interchangeable.

Inverted Coaxial Hoses

1. The maximum length of the hose shall be 13 feet.

2. The length of hose which may be in contact with the island and/or ground when the nozzle is properly mounted on the dispenser is limited to six inches (6") per loop.

Breakaway Couplings

1. Breakaway couplings are optional but, if installed, only certified breakaways with a valve which closes the vapor path when separated may be used.

   Note: The Healy system generates a high vacuum level in the vapor return lines. Any leak which causes air ingestion into the system may cause increased pressure and excessive venting. Refer to the section entitled "Tank Pressure."

Central Vacuum Unit

1. The Healy Model 600 system shall operate with at least one of the central vacuum units (pumps) specified in Exhibit 1 and illustrated in Figures 2B-1 through 2B-4, such as is necessary to ensure that the air to liquid (A/L) ratio of each nozzle shall be 1.10 plus or minus 0.10 (1.00 to 1.20). Because the pressure regulator in the nozzle responds differently to air than to vapor, the A/L ratio is not representative of the true V/L of this system; it does, however, provide an index of performance by which the performance of the system can be compared to the installation which passed the certification test. The air to liquid ratio of the system shall be measured at a flowrate between seven and ten gallons per minute (7 - 10 gpm). Any fueling point not capable of demonstrating compliance with this performance standard shall be deemed defective and removed from service. The air to liquid ratio shall be determined by a CARB-approved or district-approved test procedure. (Draft procedure TP-201.5 may be used until an air to liquid ratio test procedure is adopted by CARB). Alternative test procedures may be used if they are determined by the Executive Officer to yield comparable results.

   NOTES:

   a. If the A/L test is performed such that the aspirator portion of the nozzle is included, the A/L ratios may be approximately 0.10 higher than those specified above.

   b. This test procedure returns air rather than vapor to the storage tank, and normally causes an increase in storage tank pressure which may result in vent emissions. This is a temporary condition due to the test and should not be considered an indication of malfunction or noncompliance.

2. No dispensing shall be allowed when the central vacuum unit is disabled for maintenance or for any other reason unless the facility is operating under a district variance or upset/breakdown rule provision.

3. A threaded tap at least 1/4" in diameter shall be provided on the inlet side of the central vacuum unit. The tap shall remain plugged and vapor tight except when test equipment is being connected or removed. The system shall not be allowed to operate when the tap is not vapor tight. A high-quality quick-connect fitting with a vapor-tight cap may be installed instead of a plug if specified by the local district.

4. The normal vacuum levels observed during the efficiency testing of the Healy system with the three collection units are listed below (in inches of water column). The test was conducted at a site equipped with 4 multi-product dispensers (i.e., 8 fueling points). The facility shall contain no more fueling points than can be operated simultaneously within the specified A/L range. The local district may require demonstration of A/L with the maximum number of fueling points in operation. Based on the performance curves for each pump, the maximum number of fueling points which can be operated simultaneously within the normal operating range of vacuum levels, in inches water column (" wc) is as follows:

Central Vacuum Unit	Maximum Number of Simultaneous Fueling Points	Normal Operating Range for Vacuum Level	Vacuum Level Observed During Testing
Model 2000C Blower (1 hp)	9	65" to 85" wc	75" to 85" wc
Thomas Industries VP 500 Vane Pump (1/2 hp)	5	65" to 85" wc	70" to 82" wc
9000 Mini-Jet Pump	4	65" to 85" wc	68" to 79" wc

The system shall operate within the vacuum level range specified above. Observation of vacuum level outside of the specified range, for more than three seconds, measured while dispensing is occurring, is considered a failure of the system.

5. A valve (such as a ball valve) shall be installed in the vapor return line such that the lines can be isolated from the underground storage tanks for the purpose of conducting the test in Exhibit 4. The valve shall remain open at all times except when the test is being conducted. No product shal be dispensed when this valve is closed.

6. OSHA acceptable access to the central vacuum unit shall be provided immediately upon request for inspection and testing.

Vacuum Monitor

1. The Healy Model 600 system shall have a vacuum monitor. The minimum vacuum level shall be set to light the "low" vacuum indicator when the vacuum level is sixty-five inches water column (65" wc).

2. The vacuum monitor shall have three system indicators (lights). One light shall be for indicating that the vapor recovery system has power, the other two shall indicate whether the system is operating with "normal" or "low" vacuum levels.

3. The vacuum monitor shall be located in an area that is visible to station personnel while at their common work site. The pressure sensor shall be capable of measuring the true vapor line vacuum and installed in a location that will not cause interference with normal flow characteristics.

Testing/Monitoring System

1. The Healy system generates a high vacuum level in the vapor return lines. Any defect which compromises the integrity of the vapor lines from the nozzle to the central vacuum unit may cause the ingestion of large amounts of air. Excess air in the storage tanks causes excessive vent emissions when the pressure exceeds the pressure setting of the P/V valve and may cause observable product shrinkage. The Testing/Monitoring System which is required by July 1, 1996, shall, at a minimum, create a permanent record of system operation and ensure that leaks which may cause excess emissions will be detected.

Inverted Coaxial Hose Adapters

1. Inverted coaxial hose adapters shall be 100 percent performance checked at the factory to verify the integrity of the vapor path. The adapters shall be tested to the same criteria specified for nozzles in the section above.

Pressure/Vacuum Valves for Storage Tank Vents

1. A pressure/vacuum (P/V) valve shall be installed on each tank vent. Vent lines may be manifolded provided the manifold is installed at a height not less than 12 feet above the driveway surface used for Phase I tank truck filling operations. At least one P/V valve shall be installed on manifolded vents. If two P/V valves are desired, they shall be installed in parallel, so that each can serve as a backup for the other if one should fail to open properly. The P/V valve shall be a CARB-certified valve as specified in Exhibit 1. The outlets shall vent upward and be located to eliminate the possibility of vapor accumulating or traveling to a source of ignition or entering adjacent buildings.

Vapor Recovery Piping Configurations

1. The maximum allowable pressure drop through the system, measured at a flow rate of 60 SCFH with dry Nitrogen gas, shall not exceed 0.02 inches water column. The pressure drop from the dispenser to the underground storage tank shall be measured so as to eliminate a blockage which may be caused by the central unit in one of the following ways:

    - If the central vacuum unit is located in the turbine pit, the pressure drop shall be measured from the dispenser riser to the central vacuum unit inlet;

    - If the central vacuum unit is not located in the turbine pit, the pressure drop shall be measured as indicated above and the pressure drop measured from the central vacuum unit outlet to the storage tank with the poppeted Phase I vapor connection open shall be measured and the results summed.

2. The dispenser shall be connected to the riser with either flexible or rigid material which is listed for use with gasoline. The dispenser-to-riser connection shall be installed so that any liquid in the lines will drain toward the storage tank. The internal diameter of the connector,

including all fittings, shall not be less than five-eighths inch (5/8") for factory equipped dispensers. Exception: Healy Model series Z0XXX vapor recovery retrofit kits. The Z0XXX series retrofit kits consist of two 0.5" OD copper tube and flare fittings connecting all hose outlet fittings on one side of the dispenser to a 1/2" pipe running vertically from the canopy to the base of the dispenser where 0.5" OD copper tubing and flare fittings continue to make connection to the underground vapor return riser. This piping configuration is required on each side of the dispenser.

3. All vapor return lines shall slope a minimum of 1/8 inch per foot. A slope of 1/4 inch or more per foot is recommended wherever feasible.

4. The recommended nominal inside diameter of the underground Phase II plumbing is as indicated in Figures 2A-1 through 2A-6. Smaller vapor lines are not recommended but may be used provided the pressure drop criteria specified above are met. The vapor return lines shall be manifolded below grade at the tanks as indicated in the figures.

5. All vapor return and vent piping shall be installed, at a minimum, in accordance with the manufacturer's instructions and all applicable regulations.

Underground Storage Tank (UST) Pressure

WARNING: Phase I fill caps should be opened with caution because the storage tank may be under pressure.

1. The Healy Model 600 system was observed to have normal operating tank pressures less than 1 inch water column. Pressures that are consistently above the normal tank pressure levels, particularly pressures which correlate with periods of vehicle fueling, may indicate system malfunction. In the event that high pressures in the storage tank are observed consistently, or that product shrinkage is observed, the owner or operator of the installation shall conduct, and pass, the test procedure in Exhibit 4 of this Order. Test results shall be made available to the district upon request within fifteen days after the test is conducted, or within fifteen days of the request. Alternative test procedures may be used if determined by the Executive Officer to yield comparable results. The local district may require the facility to cease operations when the integrity of the vapor lines is compromised.

2. The local district may require the installation of a threaded tap at least 1/8" in diameter at which storage tank pressure may be monitored. The tap may be located at the outlet side of the central vacuum unit, or may be located in the vent line no less than six feet and no more than eight feet above grade. The tap shall remain plugged and vapor tight except when test equipment is being connected or removed. The system shall not be allowed to operate when the tap is not vapor tight. A high-quality quick-connect fitting with a vapor-tight cap may be installed instead of a plug if specified by the district.

Phase I System

1. The Phase I system shall be a CARB-certified system which is in good working order and which demonstrates compliance with the static pressure decay test criteria contained in Exhibit 4 of this Order. Coaxial Phase I systems shall not be used with new installations

of the system. Replacement of storage tanks at existing facilities, or modifications which cause the installation of new or replacement Phase I vapor recovery equipment, are considered new installations with regard to this prohibition. An exception to this prohibition may be made for coaxial Phase I systems CARB-certified after January 1, 1994, as compatible for use with Phase II systems which require pressure/vacuum vent valves.

Where installation of the Healy Model 600 system is made by retrofitting previously installed equipment, local districts may elect to allow existing coaxial Phase I systems to remain in use for a specifically identified period of time provided the following conditions are met:

- the existing coaxial Phase I system is a poppeted, CARB-certified system capable of demonstrating compliance with the static pressure decay test as specified above; and

- installation of the Phase II system requires no modification of the UST(s) and/or connections.

2. Spill containment manholes which have drain valves shall demonstrate compliance with the static pressure decay criteria with the drain valves installed as in normal operation. Manholes with cover-actuated drain valves shall not be used in new installations (as defined above) after May 1, 1995. Manholes with cover-actuated drain valves may remain in use in facilities where installation of the Healy Model 600 system does not require modification of the tank fittings provided the facility demonstrates compliance with static pressure decay test criteria both with the cover open and with the cover closed. The local district may require the removal of drain valves provided an alternate method of draining the spill container is specified (i.e., a hand pump maintained at the facility and/or on the product delivery trucks).

3. The Phase I vapor recovery system shall be operated during product deliveries so as to minimize the loss of vapors from the facility storage tank which may be under pressure. There shall be no less than one vapor return hose connected for each product being delivered. Provided it is not in conflict with established safety procedures, this may be accomplished in the following manner:

   - the Phase I vapor return hose is connected to the delivery tank and to the delivery elbow before the elbow is connected to the facility storage tank;

   - the delivery tank is opened only after all vapor connections have been made, and is closed before connection of any vapor return hoses;

   - the existing coaxial Phase I equipment is in good working order and has demonstrated compliance with static pressure decay test criteria when tested with all fill caps removed; and

   - the vapor return hose is disconnected from the facility storage tank before it is disconnected from the delivery tank.

4. Storage tank vent piping shall be maintained white, silver or beige. Colors which will similarly prevent heating of the system due to solar gain may also be used, provided they are listed in the EPA AP-42 as having a factor the same as or better than that of the colors listed above.

5. Manholes shall be maintained a color which minimizes solar gain, as specified above. Manhole covers which are color coded for product identification are exempted from this requirement.

Executive Order G-70-165
Figure 2A-1
Typical Installation of the Healy #600 Nozzle Vapor Recovery System with Two-Point Phase I System

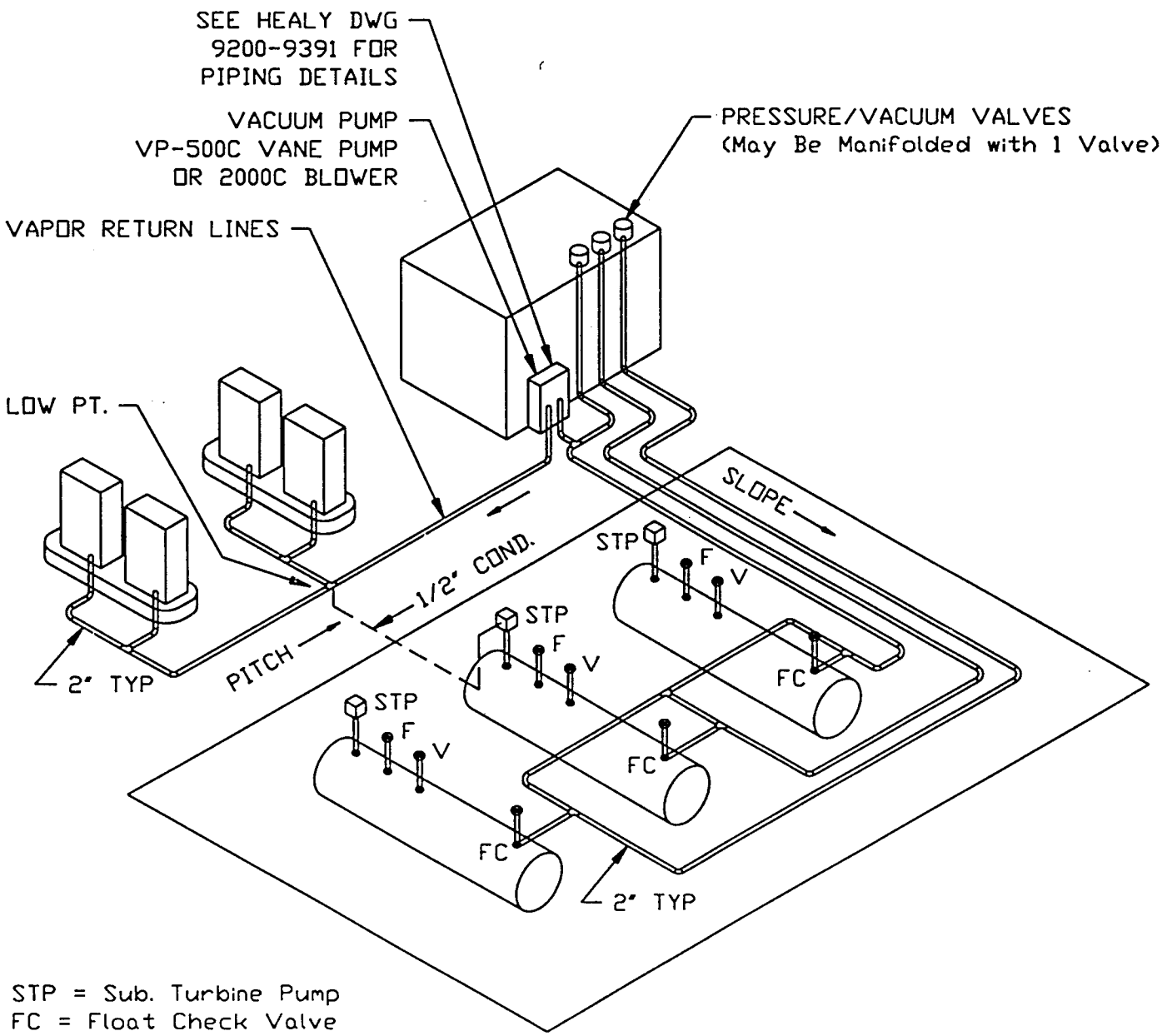

STP = Sub. Turbine Pump
FC = Float Check Valve
F = Fill Line
V = Phase I Vapor Recovery

Note: 1. All Vapor/Vent Lines are 2"
2. Slope: 1/8" per foot Min.
1/4" per foot Prefered
3. Maintain 2'-0" Clearance Between Fill Line and Phase I Vapor Return Line to Truck

Executive Order G-70-165
Figure 2A-2
Typical Installation of the
Healy #600 Nozzle Vapor Recovery System
With Two-Point Phase I System

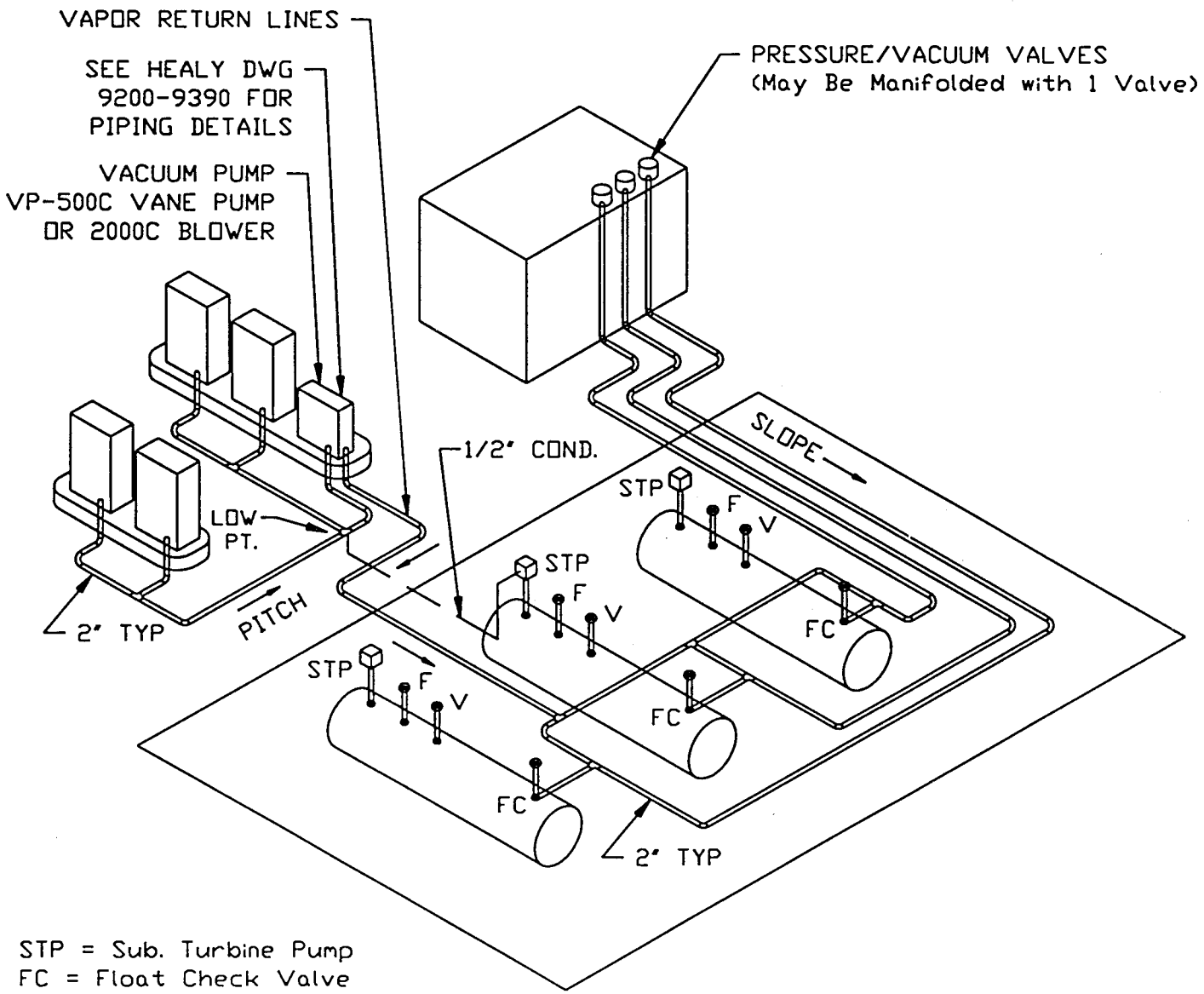

STP = Sub. Turbine Pump
FC = Float Check Valve
F = Fill Line
V = Phase I Vapor Recovery

Note: 1. All Vapor/Vent Lines are 2"
2. Slope: 1/8" per foot Min.
1/4" per foot Prefered
3. Maintain 2'-0" Clearance Between Fill Line and Phase I Vapor Return Line to Truck

Executive Order G-70-165
Figure 2A-3
Typical Installation of the Healy #600 Nozzle Vapor Recovery System With Two-Point Phase I System

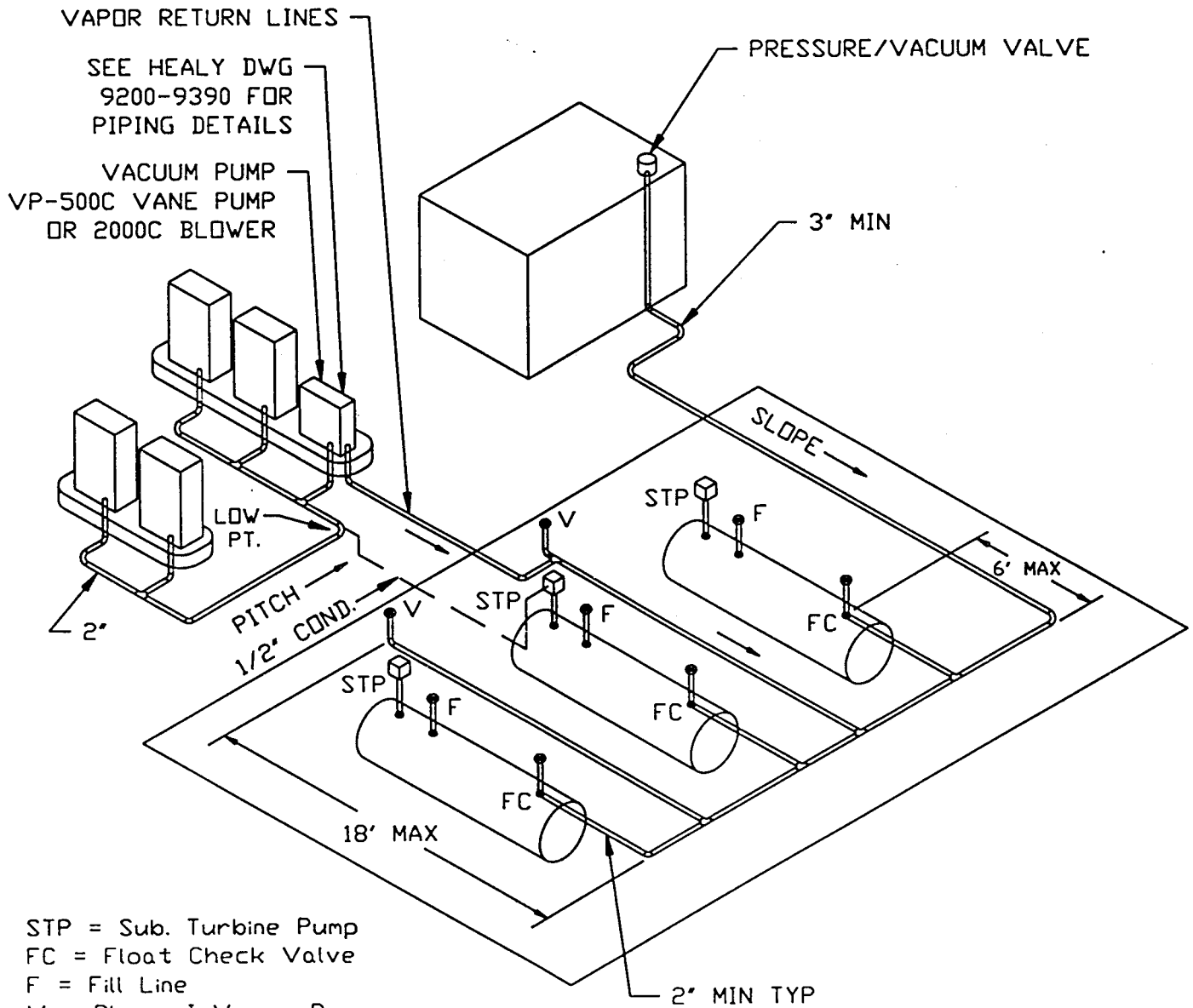

STP = Sub. Turbine Pump
FC = Float Check Valve
F = Fill Line
V = Phase I Vapor Recovery

Note: 1. All Vapor/Vent Lines are 3" Except as Noted
2. Slope: 1/8" per foot Min.
1/4" per foot Prefered
3. Maintain 2'-0" Clearance Between Fill Line and Phase I Vapor Return Line to Truck
4. No less than one vapor return hose must be connected for each product being delivered

Executive Order G-70-165
Figure 2A-4
Typical Installation of the Healy #600 Nozzle Vapor Recovery System With Two-Point Phase I System

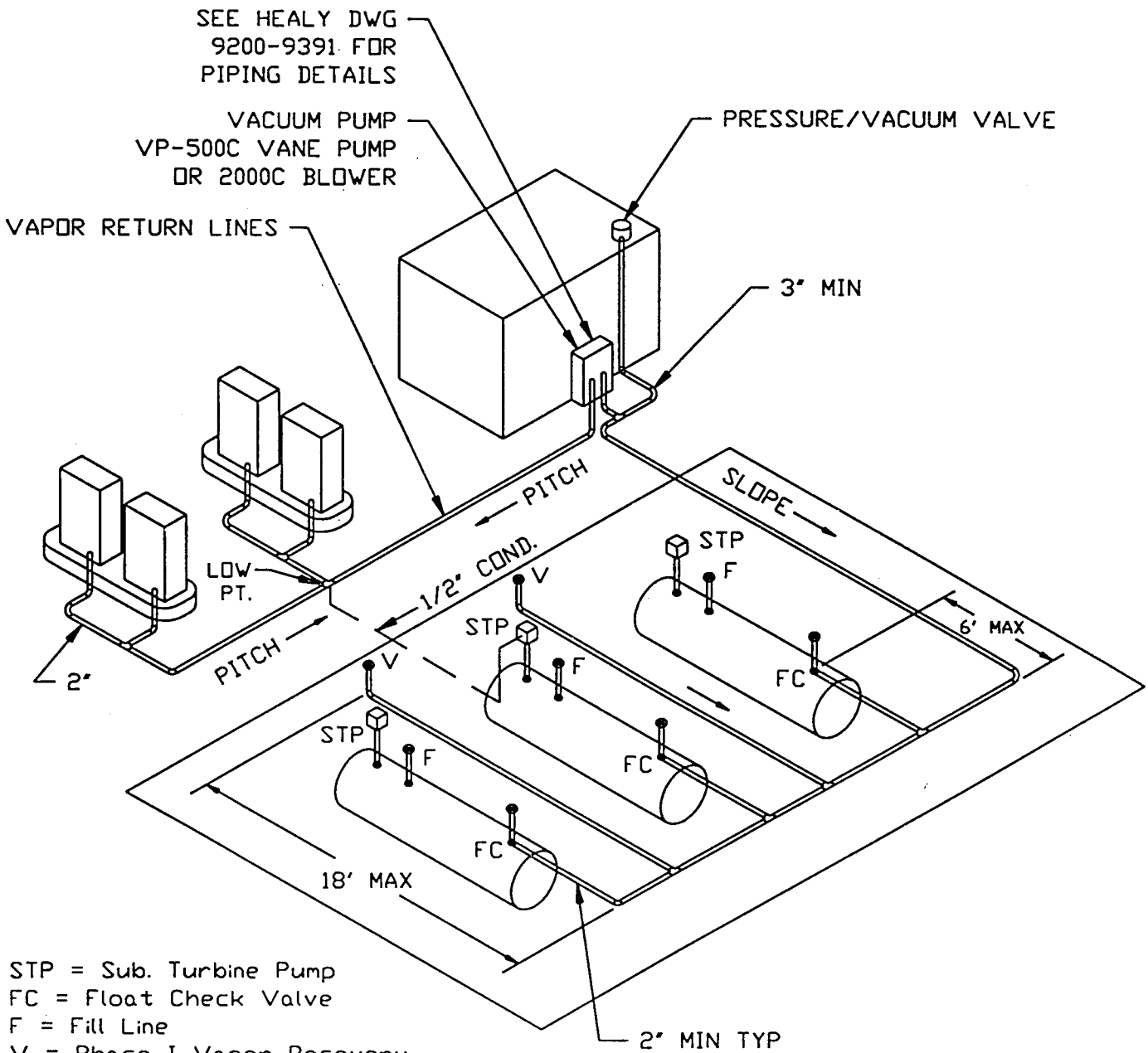

STP = Sub. Turbine Pump
FC = Float Check Valve
F = Fill Line
V = Phase I Vapor Recovery

Note: 1. All Vapor/Vent Lines are 3" Except as Noted
2. Slope: 1/8" per foot Min.
1/4" per foot Prefered
3. Maintain 2'-0" Clearance Between Fill Line and Phase I Vapor Return Line to Truck
4. No less than one vapor return hose must be connected for each product being delivered

Executive Order G-70-165
Figure 2A-5
Typical Installation of the Phase II Vapor Recovery System With Two-Point Phase I System

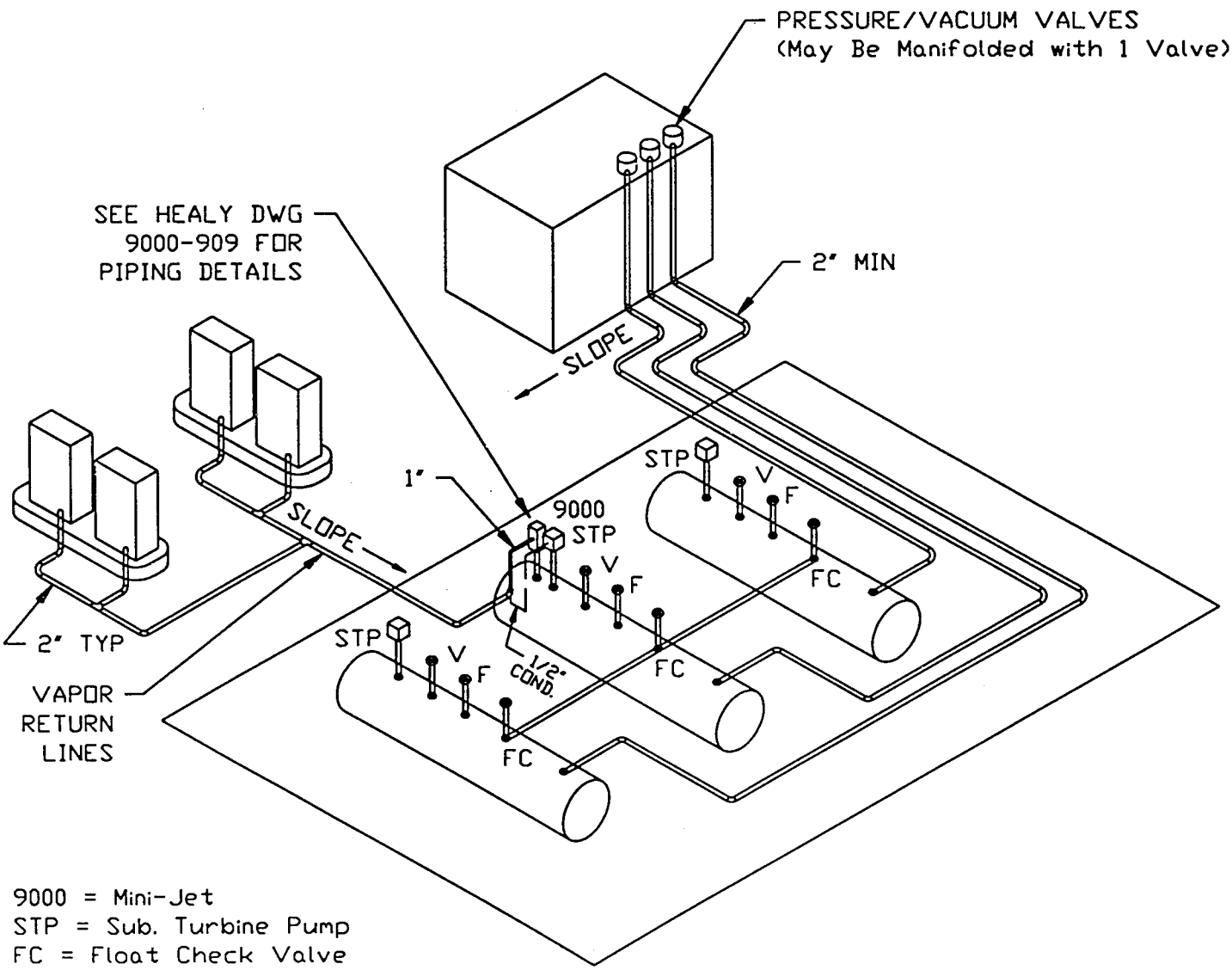

9000 = Mini-Jet
STP = Sub. Turbine Pump
FC = Float Check Valve
F = Fill Line
V = Phase I Vapor Recovery

Note: 1. All Vapor/Vent Lines are 3" Except as Noted
2. Slope: 1/8" per foot Min.
1/4" per foot Prefered
3. Maintain 2'-0" Clearance Between Fill Line and Phase I Vapor Return Line to Truck

Executive Order G-70-165
Figure 2A-6
Typical Installation of the Phase II Vapor Recovery System With Two-Point Phase I System

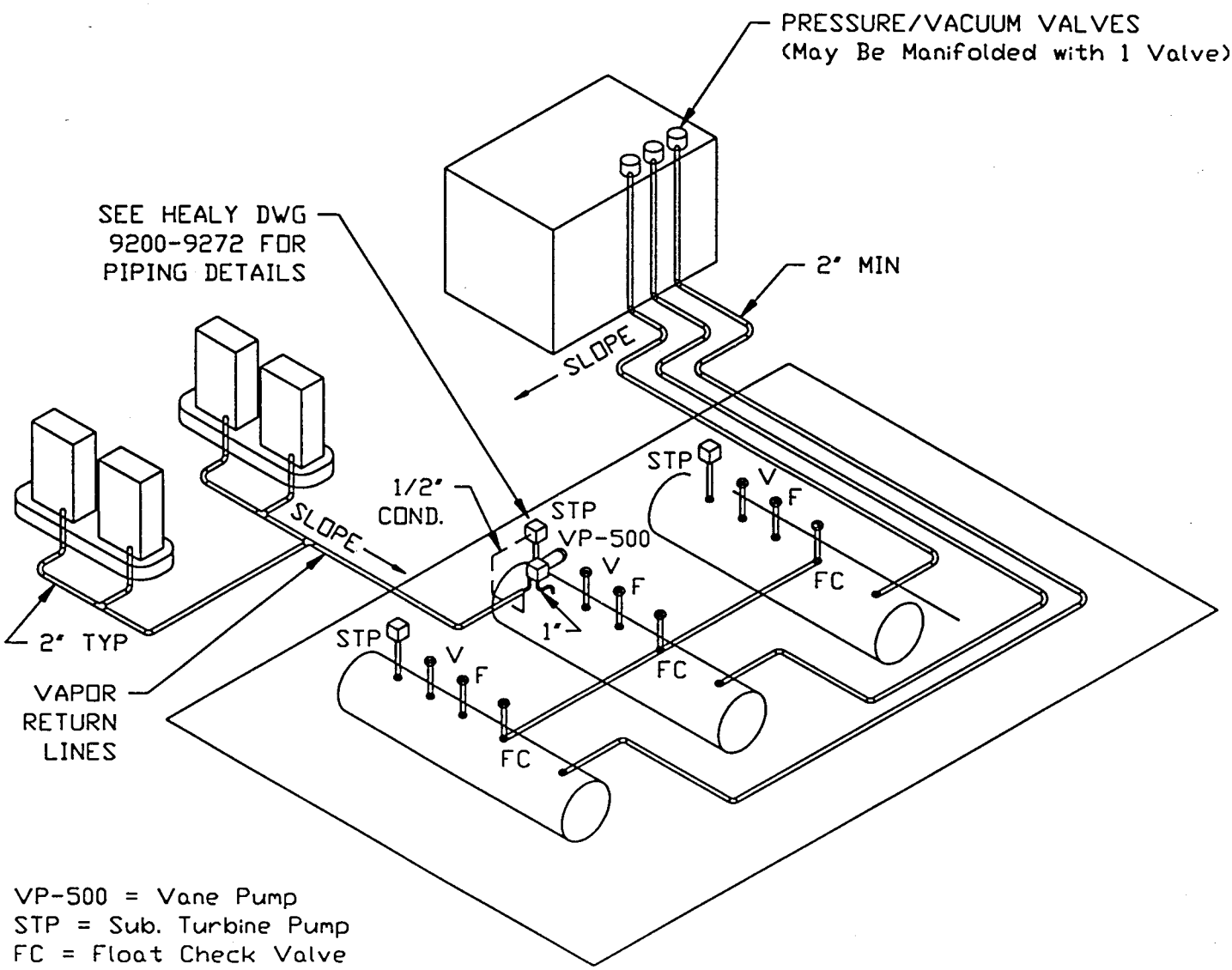

VP-500 = Vane Pump
STP = Sub. Turbine Pump
FC = Float Check Valve
F = Fill Line
V = Phase I Vapor Recovery

Note: 1. All Vapor/Vent Lines are 3" Except as Noted
2. Slope: 1/8" per foot Min.
1/4" per foot Prefered
3. Maintain 2'-0" Clearance Between Fill Line and Phase I Vapor Return Line to Truck

Executive Order G-70-165
Figure 2B-1
2000C Vacuum Blower

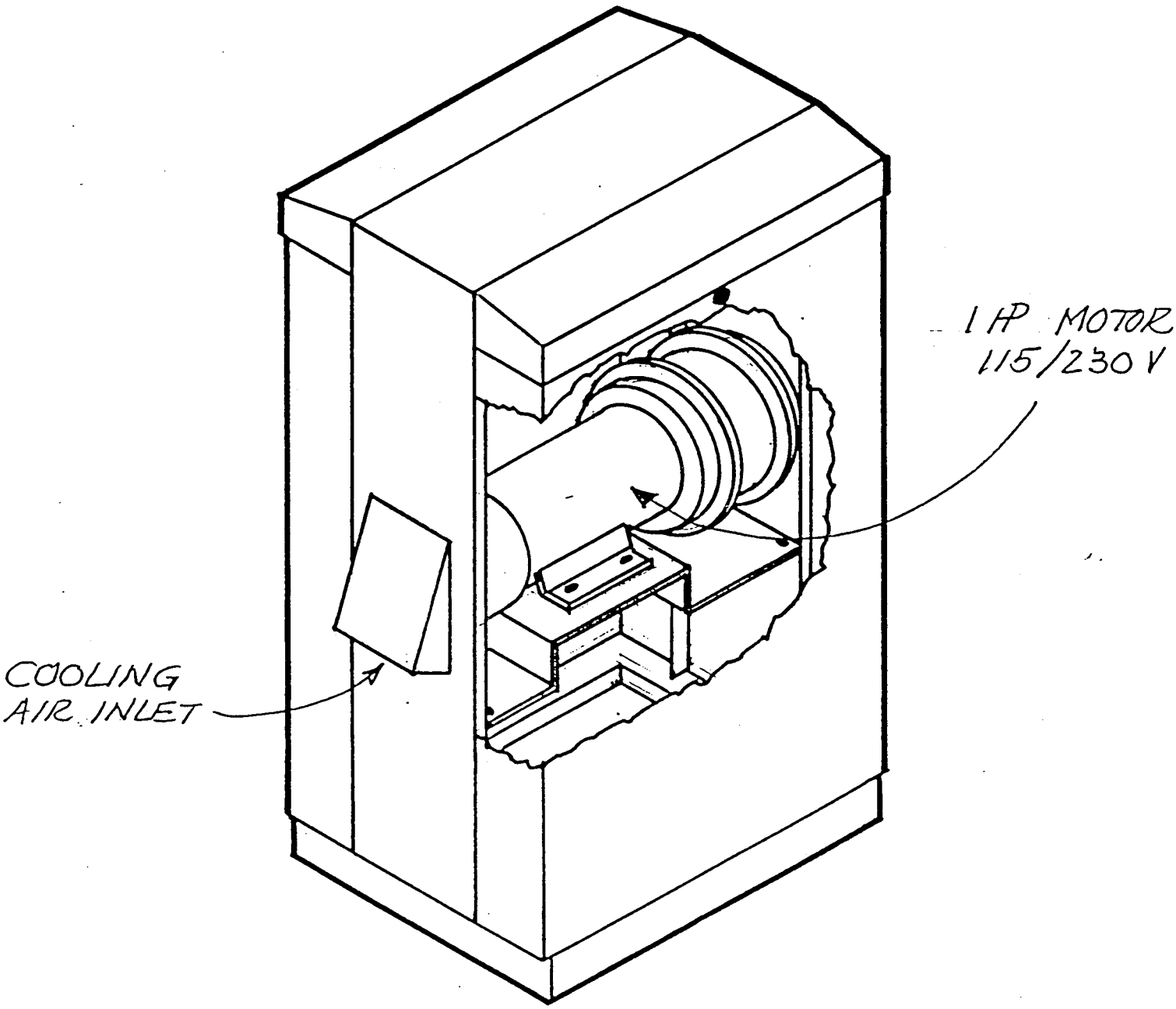

Executive Order G-70-165
Figure 2B-2
VP-500C Vane Pump

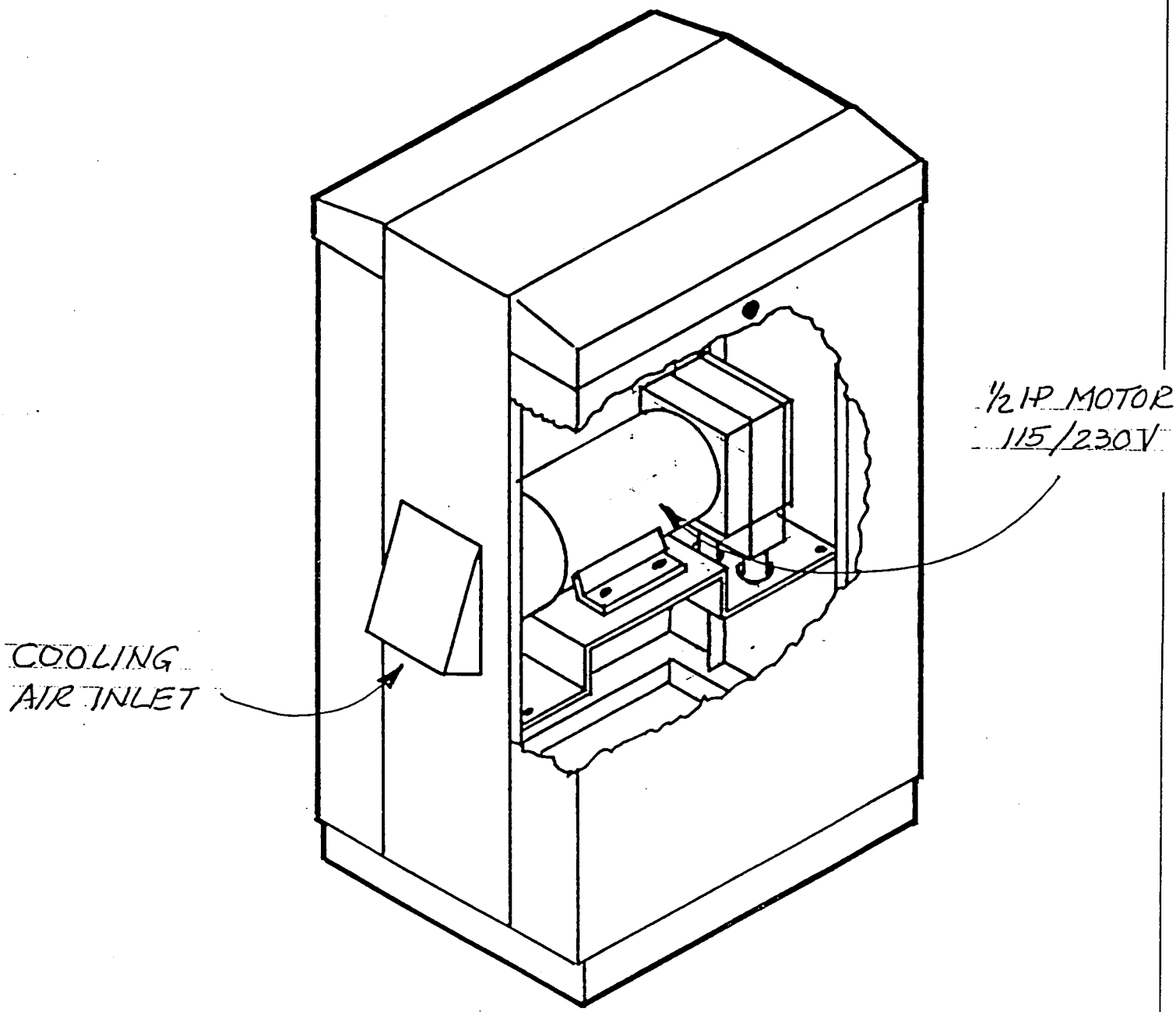

Executive Order G-70-165
Figure 2B-3
VP-500 Vane Pump

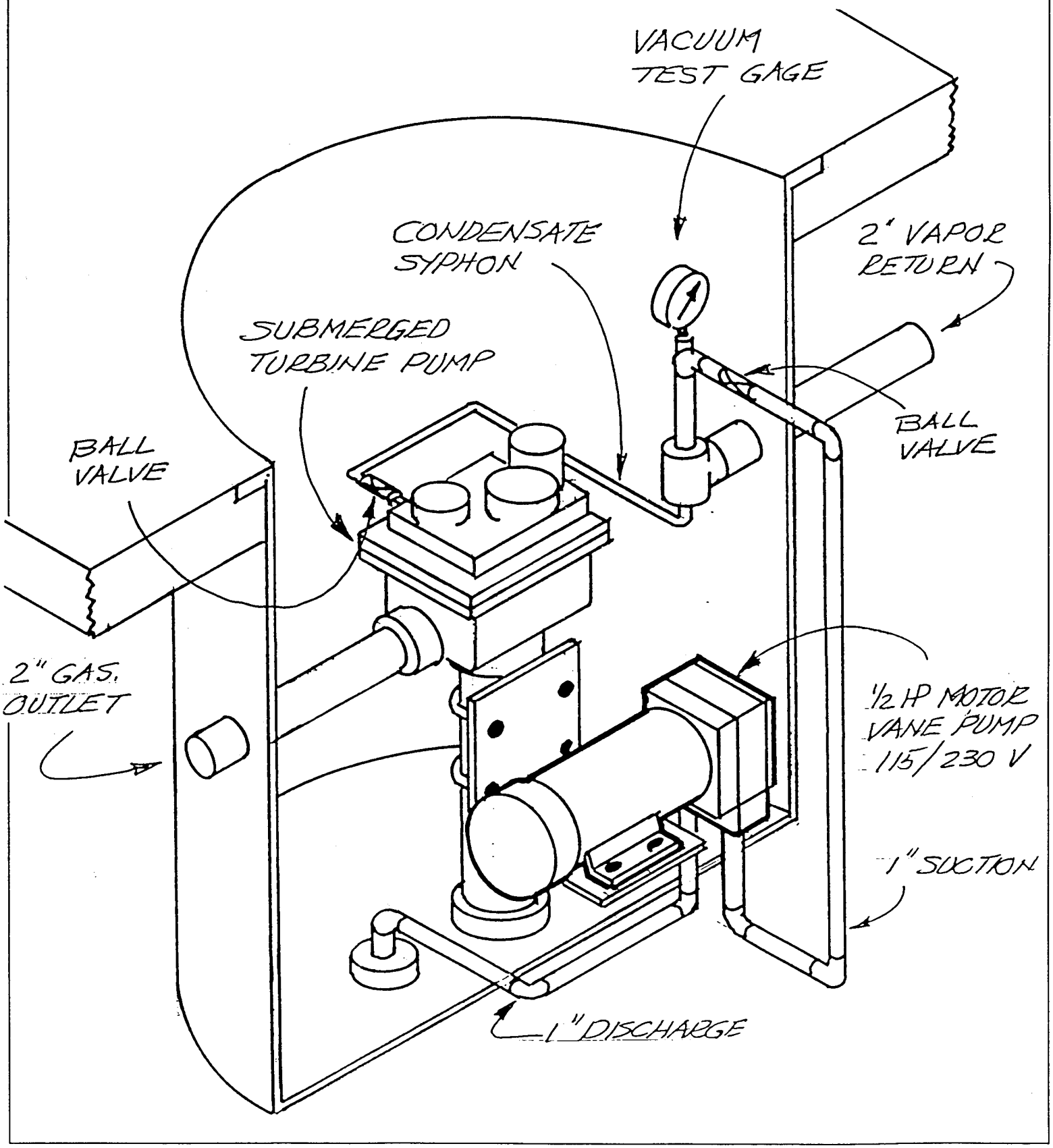

Executive Order G-70-165
Figure 2B-4
9000 Mini-Jet

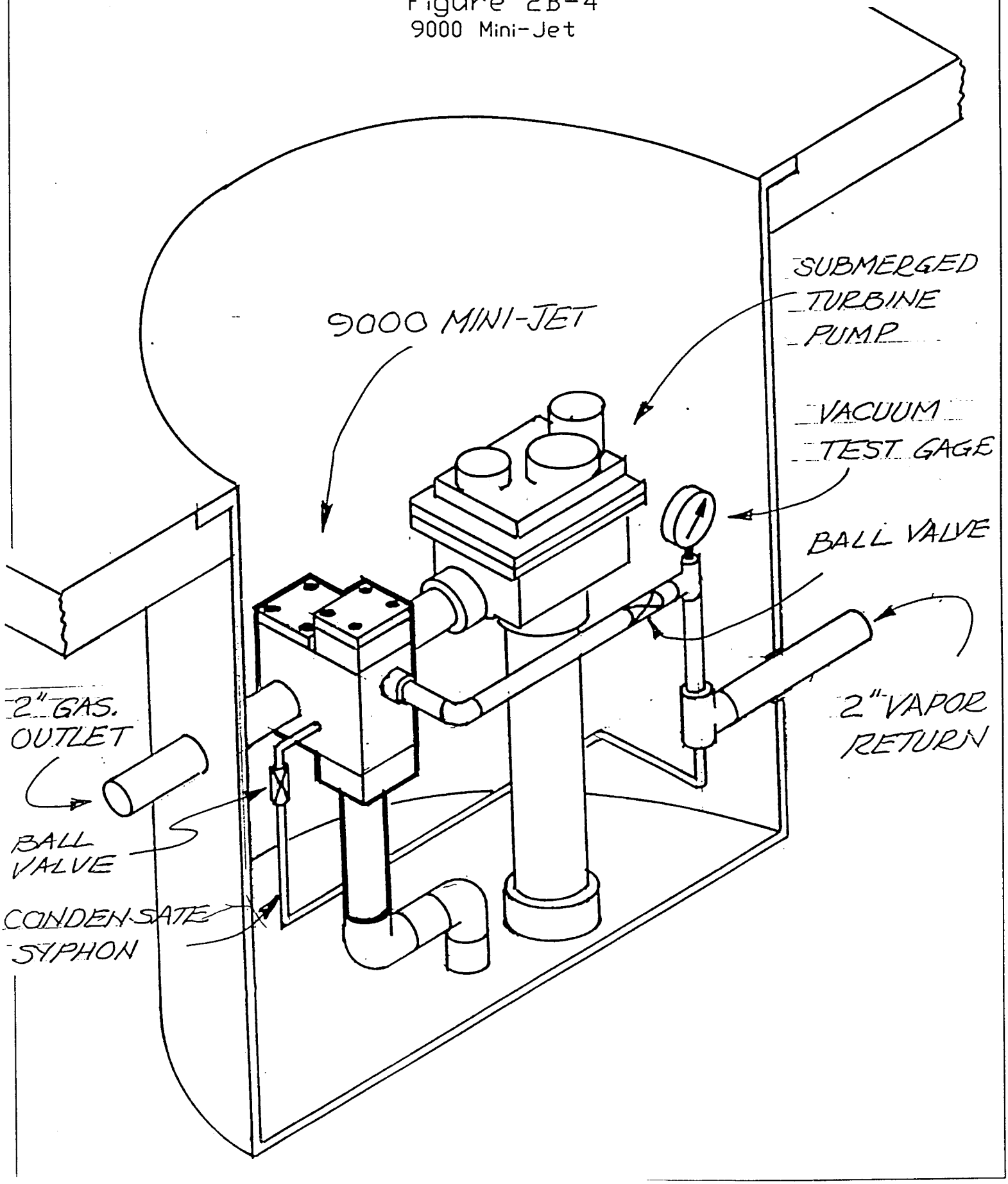

Executive Order G-70-165
Figure 2C
Healy 600 Nozzle

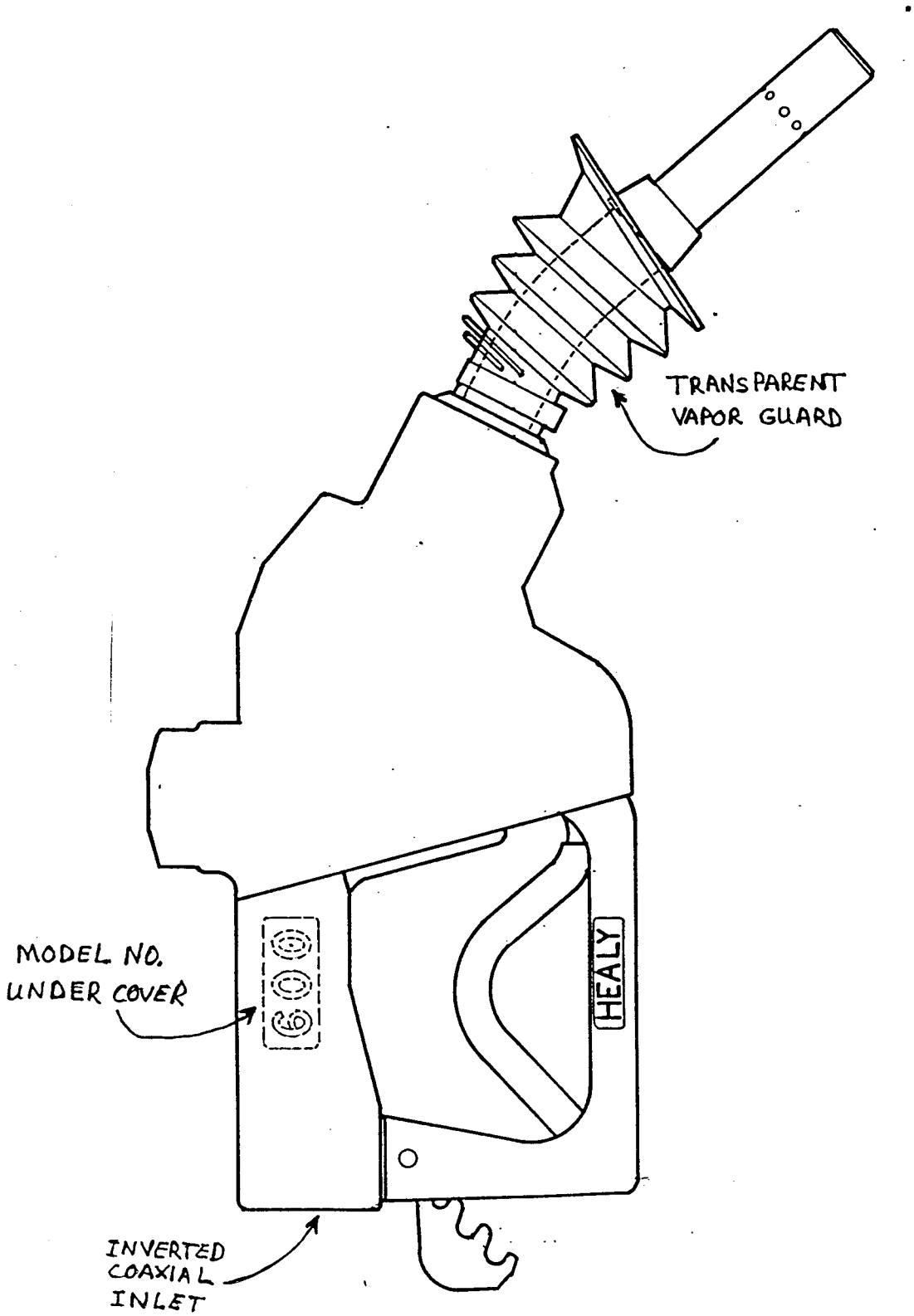

Executive Order G-70-165

Healy Phase II Vapor Recovery System

Exhibit 3

STATIC PRESSURE INTEGRITY TEST UNDERGROUND STORAGE TANKS*

1. Applicability

1.1 This test procedure is used to quantify the vapor tightness of vapor recovery systems installed at any gasoline dispensing facility (GDF) equipped with pressure/vacuum (P/V) valves with designed pressure settings specified in Exhibit 1 of this Order. Excessive leaks in the vapor recovery system will increase the quantity of fugitive hydrocarbon emissions and lower the overall efficiencies of both the Phase I and Phase II vapor recovery systems.

2. Principle

2.1 The entire vapor recovery system is pressurized with nitrogen to two (2.0) inches H_2O. The system pressure is then allowed to decay and the pressure after five (5) minutes is compared with an allowable value. The minimum allowable five-minute final pressure is based on the system ullage and pressure decay equations. For the purpose of compliance determination, this test shall be conducted after all back-filling, paving, and installation of all Phase I and Phase II components, including P/V valves, has been completed.

2.2 For GDF equipped with a coaxial Phase I system this test shall be conducted at a Phase II vapor riser. For GDF which utilize a two-point Phase I system this test may be conducted at either a Phase II riser or a Phase I vapor coupler, provided that the criteria set forth in Section 6.8 have been met. If the integrity criteria for two-point systems specified in Section 6.8 are met, it is recommended that this test be conducted at the Phase I vapor coupler.

3. Range

3.1 If mechanical pressure gauges are employed, the full-scale range of the pressure gauges shall be 0-2.0, 0-1.0, and 0-0.50 inches H_2O column. Maximum incremental graduations of the pressure gauge shall be 0.05 inches H_2O and the minimum accuracy of the gauge shall be three percent of full scale. The minimum diameter of the pressure gauge face shall be 4 inches.

3.2 If an electronic pressure measuring device is used, the full-scale range of the device shall not exceed 0-10 inches H_2O with a minimum accuracy of 0.5 percent of full-scale. A 0-20 inches H_2O device may be used, provided the equivalent accuracy is not less than 0.25 percent of full scale.

***Reference Bay Area Air Quality Management District Source Test Procedure ST-30**

3.3 The minimum and maximum total ullages shall be 500 and 25,000 gallons, respectively. These values are exclusive of all vapor piping volumes.

3.4 The minimum and maximum nitrogen feed-rates, into the system, shall be one (1) and five (5) CFM, respectively.

4. Interferences

4.1 Introduction of nitrogen into the system at flowrates exceeding five (5) CFM may bias the results of the test toward non-compliance.

5. Apparatus

5.1 Nitrogen. Use commercial grade nitrogen in a high pressure cylinder, equipped with a two-stage pressure regulator and a one psig pressure relief valve.

5.2 Pressure Measuring Device. Use 0-2.0, 0-1.0, and 0-0.50 inches H_2O pressure gauges connected in parallel, a 0-2 inches H_2O manometer, or an electronic pressure measuring device to monitor the pressure decay in the vapor recovery system. The pressure measuring device shall, at a minimum, be readable to the 0.05 inches H_2O.

5.3 "T" Connector Assembly. See Figure 3-1 for example.

Figure 3-1

"T" Connector Assembly

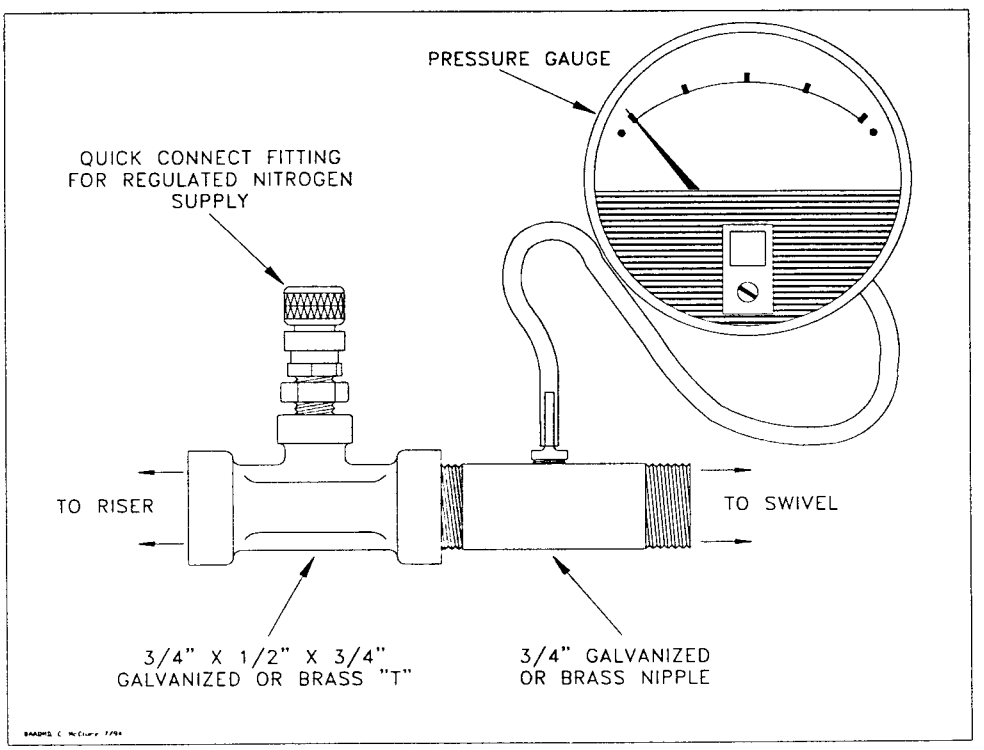

5.4 Vapor Coupler Integrity Assembly. Assemble OPW 633-A, 633-B, and 634-A adapters, or equivalent, as shown in Figure 3-2. If the test is to be conducted at the storage tank Phase I vapor coupler, this assembly shall be used prior to conducting the static leak test in order to verify the pressure integrity of the vapor poppet. The internal volume of this assembly shall not exceed 0.1 cubic feet.

Figure 3-2

Vapor Coupler Integrity Assembly

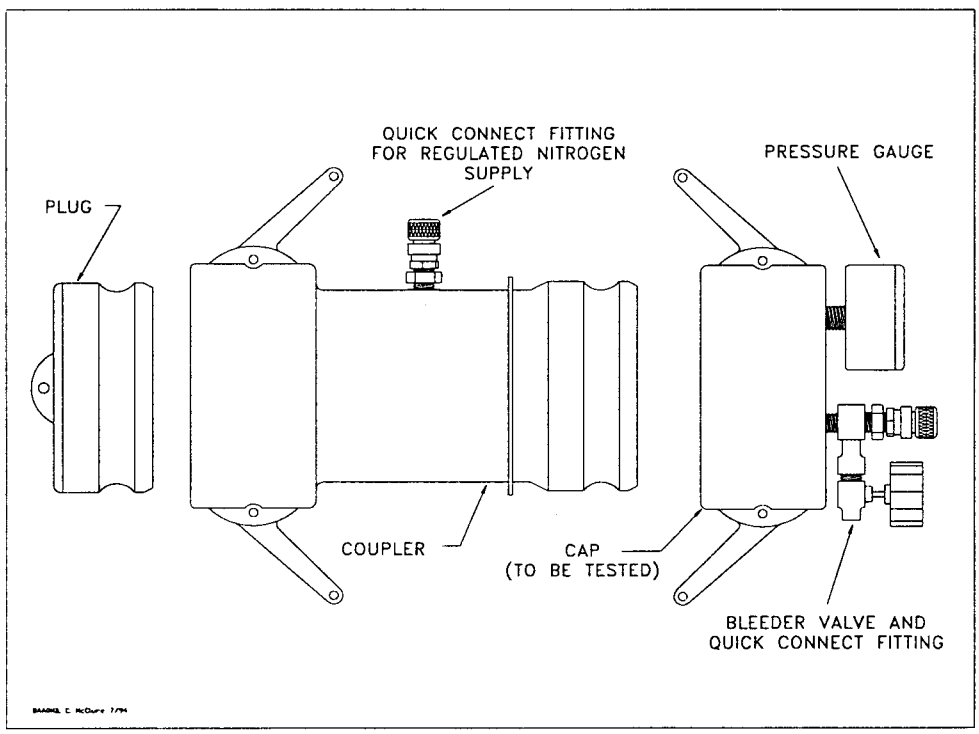

5.5 Vapor Coupler Test Assembly. Use a compatible OPW 634-B cap, or equivalent, equipped with a center probe to open the poppet, a pressure measuring device to monitor the pressure decay, and a connection for the introduction of nitrogen into the system. See Figure 3-3 for example.

5.6 Stopwatch. Use a stopwatch accurate to within 0.2 seconds.

5.7 Flowmeter. Use a Dwyer flowmeter, Model RMC-104, or equivalent, to determine the required pressure setting of the delivery pressure gauge on the nitrogen supply pressure regulator. This pressure shall be set such that the nitrogen flowrate is between 1.0 and 5.0 CFM.

5.8 Combustible Gas Detector. A Bacharach Instrument Company, Model 0023-7356, or equivalent, may be used to verify the pressure integrity of system components during this test.

5.9 Leak Detection Solution. Any liquid solution designed to detect vapor leaks may be used to verify the pressure integrity of system components during this test.

Figure 3-3

Vapor Coupler Test Assembly

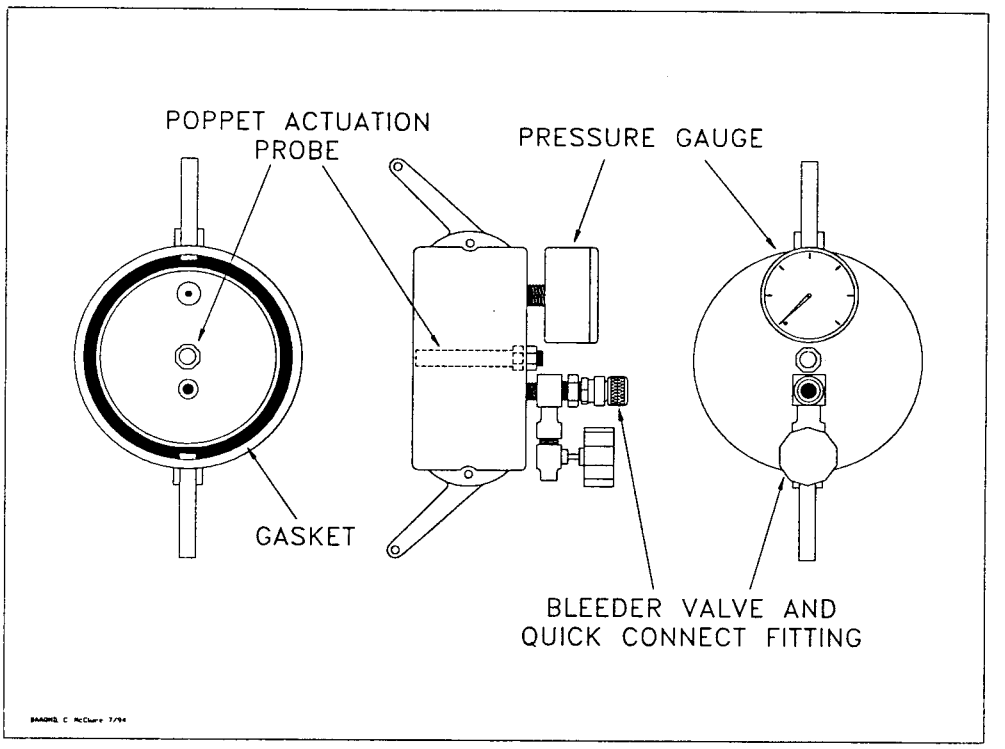

6. Pre-Test Procedures

6.1 The following safety precautions shall be followed:

6.1.1 Only nitrogen shall be used to pressurize the system.

6.1.2 A one psig relief valve shall be installed to prevent the possible over-pressurizing of the storage tank.

6.1.3 A ground strap should be employed during the introduction of nitrogen into the system.

6.2 Product dispensing shall not occur during the test. There shall have been no Phase I deliveries into or out of the storage tanks within the three hours prior to the test.

6.3 Measure the gallons of gasoline present in each underground storage tank and determine the actual capacity of each storage tank from facility records. Calculate the ullage space for each tank by subtracting the gasoline gallonage present from the actual tank capacity. The minimum ullage during the test shall be 25 percent of the tank capacity or 500 gallons, whichever is greater. The total ullage shall not exceed 25,000 gallons.

6.4 For two-point Phase I systems, this test shall be conducted with the dust cap removed from the vapor coupler. This is necessary to determine the vapor tightness of the Phase I vapor poppet. See Section 6.7 if this test is to be conducted at the Phase I vapor coupler.

6.4.1 For coaxial Phase I systems this test shall be conducted with the dust cap removed from the Phase I coupler. This is necessary to insure the vapor tightness of the Phase I vapor poppet.

6.4.2 Verify that the liquid level in the storage tank is at least four (4) inches above the highest opening at the bottom of the submerged drop tube.

6.5 If the Phase I containment box is equipped with a drain valve, the valve assembly may be cleaned and lubricated prior to the test. This test shall, however, be conducted with the drain valve installed and the manhole cover removed. See subsection 7.4.1 for further details regarding containment box drain valves.

6.6 If the test is to be conducted at a Phase II vapor riser, disconnect the dispenser end of one vapor recovery hose and install the "T" connector assembly (see Figure 3-1). Connect the nitrogen gas supply (do not use air) and the pressure measuring device to the "T" connector.

6.6.1 For those Phase II systems utilizing a dispenser mounted remote vapor check valve, the "T" connector assembly shall be installed on the vapor riser side of the check valve.

6.7 If this test is to be conducted at the Phase I vapor coupler on a two-point Phase I system, the procedures set forth in subsections 6.7.1 and 6.7.2 shall be successfully completed prior to testing. The static pressure integrity test shall not be conducted at the Phase I coupler at facilities equipped with coaxial Phase I systems.

6.7.1 Connect the Vapor Coupler Integrity Assembly to the Phase I vapor coupler. Connect the Vapor Coupler Test Assembly. Connect the nitrogen supply to the assembly and carefully pressurize the internal volume of the assembly to two (2.0) inches H_2O. Start the stopwatch. Record the final pressure after one minute.

6.7.2 If the pressure after one minute is less than 0.25 inches H_2O, the leak rate through the Phase I vapor poppet precludes conducting

the static leak test at this location. If the pressure after one minute is greater than or equal to 0.25 inches H_2O, the static leak test may be conducted at this location. This criteria assures a maximum leak rate through the Phase I vapor poppet of less than 0.0004 cubic feet per minute.

6.7.3 Disconnect the Vapor Coupler Integrity Assembly from the Phase I vapor coupler. If the requirements of subsection 6.7.2 were met, install the Vapor Coupler Test Assembly to the Phase I vapor coupler.

6.8 All pressure measuring device(s) shall be bench calibrated using either a reference gauge or incline manometer. Calibration shall be performed at 20, 50, and 80 percent of full scale. Accuracy shall be within two percent at each of these calibration points. Calibrations shall be conducted on a frequency not to exceed 90 days.

6.9 Use the flowmeter to determine the nitrogen regulator delivery pressures which correspond to nitrogen flowrates of 1.0 and 5.0 CFM. These pressures define the allowable range of delivery pressures acceptable for this test procedure. Also record which regulator delivery pressure setting, and the corresponding nitrogen flowrate, will be used during the test. As an alternative, the flowmeter may be connected, in-line between the nitrogen supply regulator and Vapor Coupler Test Assembly, during the test.

6.10 Use Equation 9.2 to calculate the approximate time required to pressurize the system ullage to the initial starting pressure of two (2.0) inches H_2O. This will allow the tester to minimize the quantity of nitrogen introduced into those systems which cannot comply with the static leak standards.

6.11 Attach the Vapor Coupler Test assembly to the Phase I poppet or the "T" connector assembly to the Phase II vapor riser. Read the initial pressure of the storage tank and underground piping. If the initial pressure is greater than 0.5 inches H_2O, carefully bleed off the pressure, in accordance with all applicable safety procedures, in the storage tank and underground piping to less than 0.5 inches H_2O column.

7. Testing

7.1 Open the nitrogen gas supply valve and set the regulator delivery pressure within the allowable range determined in Section 6.9, and start the stopwatch. Pressurize the vapor system (or subsystem for individual vapor return line systems) to **at least 2.2 inches H_2O** initial pressure. It is critical to maintain the nitrogen flow until the pressure stabilizes, indicating temperature and vapor pressure stabilization in the tanks. Check the test equipment using leak detecting solution or a combustible gas detector to verify that all test equipment is leak tight.

7.1.1 If the time required to achieve the initial pressure of two (2.0) inches H_2O exceeds twice the time derived from Equation 9.2, stop the test and use liquid leak detector, or a combustible gas

detector, to find the leak(s) in the system. Failure to achieve the initial starting pressure within twice the time derived from Equation 9.2 demonstrates the inability of the system to meet the performance criteria. Repair or replace the faulty component(s) and restart the test pursuant to Section 7.1.

7.2 Close and disconnect the nitrogen supply. Start the stopwatch when the pressure has decreased to the initial starting pressure of two (2.0) inch H_2O.

7.3 At one-minute intervals during the test, record the system pressure. After five minutes, record the final system pressure. See Table 3-I (or Equation 9.1) to determine the acceptability of the final system static pressure results. For intermediate values of ullage in Tables 3-I, linear interpolation may be employed.

7.4 If the system failed to meet the criteria set forth in Table 3-I (or the appropriate equation in Section 9), repressurize the system and check all accessible vapor connections using leak detector solution or a combustible gas detector. If vapor leaks in the system are encountered, repair or replace the defective component and repeat the test. Potential sources of leaks include nozzle check valves, pressure/vacuum relief valves, containment box drain valve assemblies, and plumbing connections at the risers.

7.4.1 If the facility fails to comply with the static leak test standards and the Phase I system utilizes a non-CARB-certified drain valve equipped containment box, which was installed prior to July 1, 1992, for which a CARB-certified replacement drain valve assembly is not marketed, the following two subsections shall apply:

7.4.1.1 The drain valve may be removed and the port plugged. Reset the system. If the facility complies with the static leak test standards under these conditions, the facility shall be considered complying with the requirements, provided that the manufacturer and model number of the containment box and the date of installation are submitted with the test results.

7.4.1.2 The criteria set forth in subsection 7.4.1.1 shall not apply after July 1, 1996.

7.5 After the remaining system pressure has been relieved, remove the "T" connector assembly and reconnect the vapor recovery hose, if applicable.

7.6 If the vapor recovery system utilizes individual vapor return lines, repeat the leak test for each gasoline grade. Avoid leaving any vapor return line open longer than is necessary to install or remove the "T" connector assembly.

7.7 If the applicable CARB Executive requires the test to be conducted with and without the containment box cover in place, repeat the test with the cover in place. In these cases clearly specify, on Form 3-1, which results represent the pressure integrity with and without the cover in place.

8. Post-Test Procedures

8.1 Use Table 3-I or, or Equations 9.1, to determine the compliance status of the facility by comparing the final five-minute pressure with the minimum allowable final pressure.

9. Calculations

9.1 The minimum allowable five-minute final pressure, with an initial pressure of two (2.0) inches H_2O, shall be calculated as follows:

[Equation 9-1]

$$P_f = 2e^{\frac{-500.887}{V}} \qquad \text{if N = 1-6}$$

$$P_f = 2e^{\frac{-531.614}{V}} \qquad \text{if N = 7-12}$$

$$P_f = 2e^{\frac{-562.455}{V}} \qquad \text{if N = 13-18}$$

$$P_f = 2e^{\frac{-593.412}{V}} \qquad \text{if N = 19-24}$$

$$P_f = 2e^{\frac{-624.483}{V}} \qquad \text{if N > 24}$$

Where:

N = The number of affected nozzles. For manifolded systems, N equals the total number of nozzles. For dedicated plumbing configurations, N equals the number of nozzles serviced by the tank being tested.

P_f = The minimum allowable five-minute final pressure, inches H_2O

e = A dimensionless constant approximately equal to 2.718

2 = The initial starting pressure, inches H_2O

9.2 The minimum time required to pressure the system ullage from zero (0) to two (2.0) inches H_2O gauge pressure shall be calculated as follows:

$$t_2 = \frac{V}{[1522]F} \qquad \text{[Equation 9-2]}$$

Where:

t_2	=	The minimum time to pressurize the ullage to two inches H_2O, minutes
V	=	The total ullage affected by the test, gallons
F	=	The nitrogen flowrate into the system, CFM
1522	=	The conversion factor for pressure and gallons

9.3 If the policy of the local district requires an allowable tolerance for testing error, the minimum allowable five-minute final pressure, including testing error, shall be calculated as follows:

$$P_{f-E} = 2 - \left[1 + \left(\frac{E}{100}\right)\right]\left[408.9 - \left(P_f + 406.9\right)\right. \qquad \text{[Equation 9-3]}$$

Where:

$P_{f\text{-}E}$	=	The minimum allowable five-minute final pressure including allowable testing error, inches H_2O
E	=	The allowable testing error, percent
P_f	=	The minimum allowable five-minute final pressure calculated in Equations 9-1 or 9-2, inches H_2O
2	=	The initial starting pressure, inches H_2O
408.9	=	Atmospheric pressure plus the initial starting pressure, inches H_2O
406.9	=	Atmospheric pressure, inches H_2O

10. Reporting

10.1 The calculated ullage and system pressures for each five-minute vapor recovery system test shall be reported as shown in Form 3-1. Be sure to include the Phase I system type (two-point or coaxial), the Phase II system type, whether the system is manifolded, and the one-minute pressures during the test.

Executive Order G-70-165

TABLE 3-1

PRESSURE DECAY LEAK RATE CRITERIA

INITIAL PRESSURE OF 2 INCHES OF H_2O

MINIMUM PRESSURE AFTER 5 MINUTES, INCHES OF H_2O

ULLAGE, GALLONS	NUMBER OF AFFECTED NOZZLES 01-06	07-12	13-18	19-24	> 24
500	**0.73**	**0.69**	**0.65**	**0.61**	**0.57**
550	0.80	0.76	0.72	0.68	0.64
600	**0.87**	**0.82**	**0.78**	**0.74**	**0.71**
650	0.93	0.88	0.84	0.80	0.77
700	**0.98**	**0.94**	**0.90**	**0.86**	**0.82**
750	1.03	0.98	0.94	0.91	0.87
800	**1.07**	**1.03**	**0.99**	**0.95**	**0.92**
850	1.11	1.07	1.03	1.00	0.96
900	**1.15**	**1.11**	**1.07**	**1.03**	**1.00**
950	1.18	1.14	1.11	1.07	1.04
1,000	**1.21**	**1.18**	**1.14**	**1.10**	**1.07**
1,200	1.32	1.28	1.25	1.22	1.19
1,400	**1.40**	**1.37**	**1.34**	**1.31**	**1.28**
1,600	1.46	1.43	1.41	1.38	1.35
1,800	**1.51**	**1.49**	**1.46**	**1.44**	**1.41**
2,000	1.56	1.53	1.51	1.49	1.46
2,200	**1.59**	**1.57**	**1.55**	**1.53**	**1.51**
2,400	1.62	1.60	1.58	1.56	1.54
2,600	**1.65**	**1.63**	**1.61**	**1.59**	**1.57**
2,800	1.67	1.65	1.64	1.62	1.60
3,000	**1.69**	**1.68**	**1.66**	**1.64**	**1.62**
3,500	1.73	1.72	1.70	1.69	1.67
4,000	**1.76**	**1.75**	**1.74**	**1.72**	**1.71**
4,500	1.79	1.78	1.77	1.75	1.74
5,000	**1.81**	**1.80**	**1.79**	**1.78**	**1.77**
6,000	1.84	1.83	1.82	1.81	1.80
7,000	**1.86**	**1.85**	**1.85**	**1.84**	**1.83**
8,000	1.88	1.87	1.86	1.86	1.85
9,000	**1.89**	**1.89**	**1.88**	**1.87**	**1.87**
10,000	1.90	1.90	1.89	1.88	1.88
15,000	**1.93**	**1.93**	**1.93**	**1.92**	**1.92**
20,000	1.95	1.95	1.94	1.94	1.94
25,000	**1.96**	**1.96**	**1.96**	**1.95**	**1.95**

Note: For manifolded Phase II Systems, the **"Number of Affected Nozzles"** shall be the total of all gasoline nozzles. For dedicated return configurations, the **"Number of Affected Nozzles"** shall be the total of those nozzles served by the tank being tested.

Distribution:	Executive Order G-70-165 FORM 3-1 **Summary of Source Test Results**	Report No.: _____ Test Date: _____ Test Times: Run A: _____ Run B: _____ Run C: _____

Source Information		Facility Parameters
GDF Name and Address	GDF Representative and Title	PHASE II EQUIPMENT System:
	GDF Phone No. ( )	NOZZLE Type/Number
	Source: GDF Vapor Recovery System	Comments
Permit Conditions	GDF # _____ A/C # _____	Manifolded? Y or N

Operating Parameters:

Number of Nozzles Served by Tank #1	_____	Number of Nozzles Served by Tank #3	_____
Number of Nozzles Served by Tank #2	_____	Total Number of Gas Nozzles at Facilty	_____

Applicable Regualtions:	FOR OFFICE USE ONLY:

Source Test Results and Comments:

TANK #:	1	2	3	TOTAL
1. Product Grade				
2. Actual Tank Capacity, gallons				
3. Gasoline Volume, Gallons				
4. Ullage, gallons (#2 -#3)				
5. Phase I System Type				
6. Initial Test Pressure, Inches H_2O **(2.0)**				
7. Pressure After 1 Minute, Inches H_2O				
8. Pressure After 2 Minutes, Inches H_2O				
9. Pressure After 3 Minutes, Inches H_2O				
10. Pressure After 4 Minutes, Inches H_2O				
11. **Final Pressure After 5 Minutes, Inches H_2O**				
12. Allowable Final Pressure from Table 30-I				
13. Test Status **[Pass or Fail]**				

Test Conducted by:	Test Company Name _____ Address _____ City _____	Date and Time of Test:

Executive Order G-70-165

Exhibit 4

Vapor Return Line Vacuum Integrity Test for the Healy Model 600 System

1. Applicability

1.1 This test procedure is used to verify the vapor tightness of the portion of the Healy system which is subjected to relatively high levels of vacuum in the vapor return lines. A defective vapor valve, or any other defect which compromises the integrity of the vapor lines from the nozzle to the central vacuum unit, may cause the ingestion of large amounts of air. Excess air in the storage tanks will cause significant vent emissions when the pressure exceeds the pressure setting of the P/V valve. Ingested air will also cause the evaporation of gasoline in the storage tanks and may result in observable product shrinkage.
Note: This test is required in addition to, and not as an alternative for, the static pressure decay test in Exhibit 3.

2. Principle

2.1 The vapor lines from the nozzle to the central vacuum unit are isolated from the underground storage tanks by closing the vapor and siphon line ball valves after activating the central vacuum unit. The unit is turned off and the vacuum is allowed to decay. The value is compared with an allowable value.

3. Range

3.1 If mechanical pressure gauges are employed, the full-scale range of the pressure gauges shall be zero to 100 inches water column (0 - 100" wc), to be sensed as vacuum. Maximum incremental graduations of the pressure gauge shall be 2 inches wc and the minimum accuracy of the gauge shall be three percent of full scale. The minimum diameter of the pressure gauge face shall be four (4) inches.

3.2 If an electronic pressure measuring device is used, the full scale range of the device shall not exceed zero to 200 inches water column (0 - 200" wc) with a minimum accuracy of 0.5 percent of full scale.

4. Interferences

4.1 Any attempts to dispense product during the test will open the lines being tested and invalidate the results.

5. Apparatus

5.1 Pressure Measuring Device. Use a pressure gauge, or an electronic pressure measuring device, set up to measure vacuum, to monitor the decay of the vacuum level in the vapor return lines. The pressure measuring device shall, at a minimum, be readable to 2 inches water column.

5.2 Stopwatch. Use a stopwatch accurate to within 0.2 seconds.

6. Pre-Test Procedures

6.1 There shall be no product dispensing during the test.

6.2 All pressure measuring device(s) shall be bench calibrated using either a reference gauge or incline manometer. Calibration shall be performed at 20, 50 and 80 percent of full scale. Accuracy shall be within two percent at each of these calibration points. Calibrations shall be conducted on a frequency not to exceed 90 days.

6.3 Remove the tap or quick-connect cap and install the pressure measuring device. The device shall be installed in the portion of the vapor line to be isolated.

7. Testing

7.1 Turn on the central vacuum unit (CVU) by activating a dispenser. The CVU is turned off by replacing the nozzle on the dispenser. Alternatively, the test may be conducted immediately following product dispensing.

7.2 Observe the vacuum level on the pressure measuring device. When the vacuum level is stable, or at the end of the dispensing operation, close the vapor and siphon line ball valves to isolate the vapor lines from the storage tanks (refer to Figures 4A-1 and 4A-2 for the location of the ball valves) and turn off the CVU by replacing the nozzle on the dispenser. If a stable vacuum level is not observed after one minute of CVU operation, or if the stable vacuum level is less than that indicated in Exhibit 2 as within the normal vacuum level for the CVU installed, turn off the CVU and check for problems before proceeding with the test.

7.3 Note the initial vacuum level and start the stopwatch. Record the vacuum level at one minute intervals. After five minutes, record the final vacuum level.

7.4 Calculate the difference between the final vacuum level and the initial vacuum level to obtain the observed change in vacuum. Note this value as the "measured ΔP". Estimate the total length of 2 inch diameter vapor return pipe from the dispensers to the CVU. Use this value to obtain the "calculated ΔP" in equation 4.1. If the "measured ΔP" is greater than the value obtained by equation 4-1, then a vapor

leak is evident and the system has failed. If the vacuum level does not decay more than the allowable level, proceed to Section 8.

$$\Delta P = 800/N \qquad \textbf{Equation 4.1}$$

Where:
N = The approximate length of 2 inch vapor return pipe from the dispensers to the central vacuum unit to the nearest 20 feet .

ΔP = the observed change in vacuum level in inches of water column during a five minute observation period.

(Note: If the station contains 3 inch vapor return pipes, multiply the answer in Equation 4.1 by 0.5. This equation is based on an allowable leak rate of 0.08 gallons per minute.)

7.5 If the system has failed to meet the criteria set forth in Section 7.4, repair and replace defective components as necessary and repeat the test. Defective nozzles or other components may be diagnosed by bagging with bags containing air and observing collapse of the bags, or by otherwise isolating suspected components. Note that this is only for diagnostic purposes; the test shall not be conducted with any bagged or isolated components.

7.6 If the system contains more than one CVU, repeat for each CVU and associated piping.

8. Post-Test Procedures

8.1 Remove the pressure measuring device and plug or cap to ensure that the connection point is leak tight.

8.2 Open the valves which were closed to isolate the vapor return lines.

9. Reporting

9.1 The observed initial, interim and final vacuum levels observed, the type of pressure measuring device (including range and accuracy and date of last calibration), the number of nozzles associated with the CVU and the measured ΔP shall be reported.

Executive Order G-70-165
Figure 4A-1
VP-500 Vane Pump

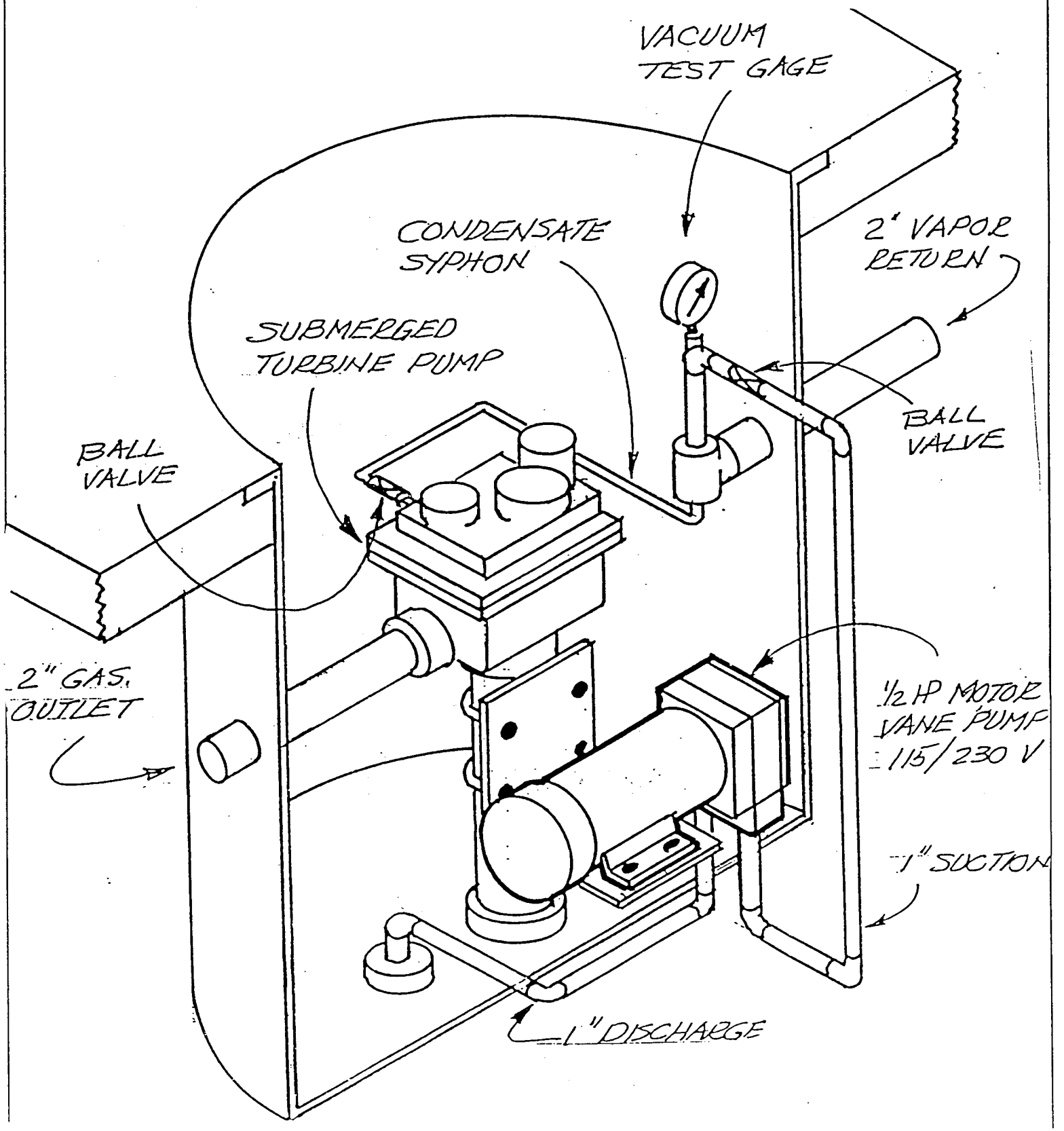
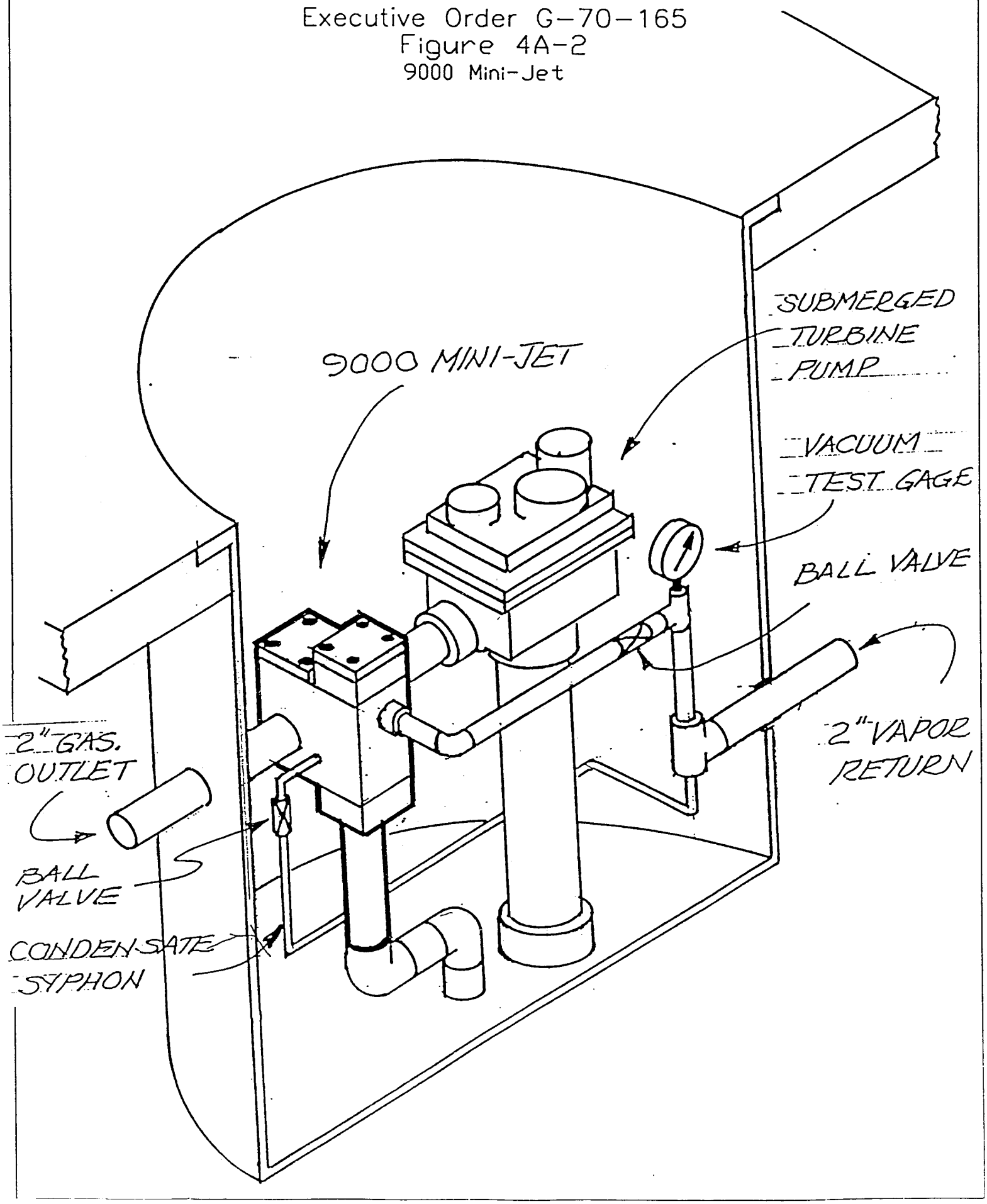
Executive Order G-70-165
Figure 4A-2
9000 Mini-Jet