State of California
AIR RESOURCES BOARD

Executive Order G-70-169

Certification of the
Franklin Electric INTELLIVAC Phase II Vapor Recovery System

WHEREAS, the California Air Resources Board ("the Board" or "CARB") has established, pursuant to California Health and Safety Code sections 39600, 39601 and 41954, certification procedures for systems designed for the control of gasoline vapor emissions during motor vehicle fueling operations (Phase II vapor recovery systems) in its "Certification Procedures for Gasoline Vapor Recovery Systems at Service Stations" (the "Certification Procedures") as last amended December 4, 1981, incorporated by reference in Title 17, California Code of Regulations, Section 94001;

WHEREAS, the Board has established, pursuant to California Health and Safety Code sections 39600, 39601 and 41954, test procedures for determining the compliance of Phase II vapor recovery systems with emission standards in its "Test Procedures for Determining the Efficiency of Gasoline Vapor Recovery Systems at Service Stations" (the "Test Procedures") as last amended September 1, 1982, incorporated by reference in Title 17, California Code of Regulations, Section 94000;

WHEREAS, Franklin Electric Company ("Franklin Electric"), requested certification of the INTELLIVAC Phase II vapor recovery system ("INTELLIVAC system") pursuant to the Certification Procedures and Test Procedures;

WHEREAS, the INTELLIVAC system has been evaluated pursuant the Board's Certification Procedures;

WHEREAS, Section VIII-A of the Certification Procedures provides that the Executive Officer shall issue an order of certification if he or she determines that the vapor recovery system conforms to all of the requirements set forth in Sections I through VII of the Certification Procedures; and

WHEREAS, I, James D. Boyd, Air Resources Board Executive Officer, find that the INTELLIVAC system conforms with all the requirements set forth in Sections I through VII of the Certification Procedures, and results in a vapor recovery system which is at least 95 percent effective for attendant and/or self-serve use at gasoline service stations when used in conjunction with a Phase I vapor recovery system which has been certified by the Board.

NOW, THEREFORE, IT IS HEREBY ORDERED that the INTELLIVAC system is certified to be at least 95 percent effective in attended and/or self-serve mode when used with a CARB-certified Phase I vapor recovery system as specified in Exhibit 1 of this Order. Fugitive emissions which may occur when the underground storage tanks are under positive pressure have not been quantified and were not included in the calculation of system effectiveness. Compatibility of this system with the onboard refueling vapor recovery systems has not been evaluated. Exhibit 1 contains a list of the equipment certified for use with the INTELLIVAC

INTELLIVAC system. Exhibit 2 contains installation and performance specifications for the equipment listed in Exhibit 1. Exhibit 3 contains a static decay test procedure. Exhibit 4 contains a procedure for verifying the maximum fuel flowrate allowed.

IT IS FURTHER ORDERED that the dispensing rate for installations of the INTELLIVAC system shall not exceed ten (10.0) gallons per minute when only one nozzle associated with the product supply pump is operating.

IT IS FURTHER ORDERED that compliance with the certification requirements and rules and regulations of the Division of Measurement Standards of the Department of Food and Agriculture, the State Fire Marshal's Office, and the Division of Occupational Safety and Health of the Department of Industrial Relations is made a condition of this certification.

IT IS FURTHER ORDERED that each vapor pump shall be 100 percent performance checked at the factory, including verification that the vapor recovery pump performance is within the range specified in Exhibit 2 of this Order.

IT IS FURTHER ORDERED that the following requirements are made a condition of certification. The INTELLIVAC system shall be installed only in facilities which are capable of demonstrating on-going compliance with the vapor integrity requirements as specified in the test procedure contained in Exhibit 3. The owner or operator of the installation shall conduct, and pass, a static pressure decay test at least once in each twelve month period, and the results shall be made available to the district upon request within fifteen days after the test is conducted, or within fifteen days of the request. Alternative test procedures may be used if determined by the Executive Officer to yield comparable results.

IT IS FURTHER ORDERED that all nozzles approved for use with the INTELLIVAC system shall be 100 percent performance checked at the factory including checks of the integrity of the vapor path, as specified in Exhibit 2 of this Order, and proper functioning of all automatic shut-off mechanisms.

IT IS FURTHER ORDERED that the system, as installed, shall comply with the procedures and performance standards which the test installation was required to meet during certification testing. Local districts may adopt stricter procedures or performance standards in accordance with the California Health and Safety Code section 41954 (g). Failure to demonstrate compliance with procedures or performance standards which are stricter than those imposed during certification testing does not, per se, constitute failure of the INTELLIVAC system to meet the terms and conditions of this Executive Order. If, in the judgment of the Executive Officer, a significant fraction of installations fail to meet the specifications of this certification, or if a significant portion of the vehicle population is found to have configurations which significantly impair the system's collection efficiency, the certification itself may be subject to modification, suspension or revocation.

IT IS FURTHER ORDERED that the certified INTELLIVAC system shall be performance tested during installation for ability to dispense gasoline and collect vapors without difficulty in the presence of the station operator, owner or designee. The station operator, owner or designee shall be provided with copies of the installation and maintenance manuals for the INTELLIVAC system, to be maintained at the station, and shall also be provided with instructions in the proper use of the INTELLIVAC system, its repair and maintenance, and where system replacement and system components can be readily obtained.

IT IS FURTHER ORDERED that revision to the certification and/or test procedures relevant to this certification may be the basis for evaluation of the system and may constitute grounds for modification, suspension or revocation of this certification.

IT IS FURTHER ORDERED that the certified INTELLIVAC system shall be warranted in writing, for at least one year, to the ultimate purchaser and each subsequent purchaser, that the vapor recovery system is designed, built and equipped so as to conform at the time of original installation or sale with the applicable regulations and is free from defects in materials and workmanship which would cause the vapor recovery system to fail to conform with applicable regulations. Copies of the manufacturer's warranty for the INTELLIVAC system shall be made available to the station manager, owner or operator. Hoses, nozzles and breakaway couplings shall be warranted to the ultimate purchaser as specified above for at least one year, or for the expected useful life, whichever is longer.

IT IS FURTHER ORDERED that the certified INTELLIVAC system shall, at a minimum, be operated in accordance with the manufacturer's recommended maintenance intervals and shall use the manufacturer's recommended operation, installation, and maintenance procedures.

IT IS FURTHER ORDERED that any alteration of the equipment, parts, design, or operation of the systems certified hereby is prohibited, and deemed inconsistent with this certification, unless such alteration has been approved by the Executive Officer or his/her designee.

Executed at Sacramento, California, this 9th day of February, 1996.

James D. Boyd
Executive Officer

Attachments

Executive Order G-70-169

Exhibit 1
INTELLIVAC System Equipment List

Component	Manufacturer/Model	State Fire Marshal IdentificationNumber
Nozzle	OPW 11VAI-xx (Figure 2C-1)	005:008:050
	with vapor valve and ECD* (nct optional)	
	xx = 63 (15/16" OD spout, hold open latch (HOL))	
	68 (13/16" OD spout, HOL)	
	83 (15/16" OD spout, no HOL)	
	88 (13/16" OD spout, no HOL)	
	* ECD: Efficiency Compliance Device	
	Husky V34 6250 (Figure 2C-2)	005:021:008
	with vapor splash guard (VSG)	
	and vapor valve	
	OR	
	any inverted coaxial nozzle CARB-Certified	
	for use with the INTELLIVAC System	
Inverted Coaxial Hose	Catlow Vapor Mate	005:033:005
	Dayco 7282 Superflex 2000	005:033:005
	Dayco 7292 Superflex 4000	005:033:006
	Goodyear Flexsteel	005:036:002
	GT Sales/Hewitt Superflex 2000	005:033:005
	Thermoid Hi-Vac	005:037:003
	Thermoid Hi-Vac S	005:037:004
	VST VSTaflex	005:052:001
	VST VST-1S-Bk	005:044:004
	OR	
	Any inverted coaxial hose CARB-certified	
	for use with the INTELLIVAC system.	
Breakaway Couplings	Catlow AV2001	005:030:006
	Catlow AVR200S	005:030:010
	Emco Wheaton A5219-001	005:030:010
	Husky 4034	005:021:009
	OPW 66CIP	005:030:006
	Richards Industries	
	VA-50	005:031:007
	VA-50B	005:031:014
	VA-60	005:031:009
	OR	
	Any inverted coaxial breakaway with a vapor valve	
	which is CARB-certified for use with the INTELLIVAC system.	

Pressure/Vacuum Valve	OPW 523LP, 523LPS	005:008:051
	Hazlett H-PVB-1 Gold label	005:017:004
	Morrison Brothers 749CRB0600AV	005:041:001
	OR	
	Any CARB-certified valve with the following pressure and vacuum settings, in inches water column (wc):	
	Pressure: three plus or minus one-half inches (3.0 ± 0.5") water column.	
	Vacuum: eight plus or minus two inches (8 ± 2") water column.	
INTELLIVAC Pump System	The system is an integrated vapor recovery unit consisting of three separate parts that are integrated into one unit (See Figure 2B)	005:053:001
	The three components are:	
	1) electronic (computerized) control unit	
	2) AC 115 or 230 volt electric motor	
	3) A rotary vane pump (1/8 hp)	
	Franklin Electric Model Number: 9430000XXX where XXX varies from 001 to 999 depending on the pump colors, port orientation and design voltages.	
Dispensers	**Tokheim Premier Series Dispensers:**	
	HxxxBR/suffix/ where	
	"H" = High hose	
	"xxx" = 311, 312, 322, 324, 411, 413, 414, 422, 426, 428	
	"B" = Premier Series	
	"R" = Remote Dispenser	
	"suffix" = B3 for 3 products, B4 for 4 products, B5 for 5 product blender, and EB for Electronic Blender	
	H424B, H412B, H424B-EB, H412B-EB, H722B-R, H724B-R, H722B-S, and H724B-S.	
	Tokheim non-Premier Series Dispensers	
	162, 162TW, 162FL, 162FL-TW, 262, 262TW, 262FL, 262FL-TW, 262A, 262A-TW, 262A-FL, and 262A-FL-TW.	
	OR	
	any other dispenser that meets the dispenser specifications listed in Exhibit 2 of this Order.	

Phase I Product Adaptors Any CARB-certified device which prevents loosening or over-tightening of the Phase I product adaptor and vapor adaptors.

Note: For systems installed before two CARB-certified devices which prevent loosening or over-tightening of the Phase I product and vapor adaptors are available, or within sixty days after that date, any standard Phase I product or vapor adaptor may be used for a period not to exceed four years from the date the second device was certified. Local districts may require earlier conversion to such devices.

Executive Order G-70-169

Exhibit 2

Specifications for the INTELLIVAC Vapor Assist System

Figures 2A-1 through 2A-4 contain drawings of a typical installation of the INTELLIVAC system. Figure 2B depicts the location of component parts of the INTELLIVAC system. Figure 2C-1 and 2C-2 depict the nozzles approved for use with the INTELLIVAC system.

General Nozzle Specifications

1. The Husky V34 6250 and the OPW 11VAI nozzles listed in Exhibit 1 have a vapor valve which prevents the loss of vapor from the underground storage tanks and ensures proper operation of the system. Any nozzle with a defective vapor valve shall be immediately removed from service and the vapor path shall be closed as soon as practicable.

2. Nozzles shall be 100 percent performance checked at the factory, including checks of all shutoff mechanisms and of the integrity of the vapor path. The maximum allowable leak rate for the nozzle shall not exceed the following:

   0.038 CFH at a pressure of two inches water column (2" wc), and
   0.005 CFH at a vacuum of twenty seven inches water column (approx 1 psi).

3. Sealing of the vapor holes on the nozzle spout (such as placing a balloon or the fingers of a glove over the holes on the nozzle spout, or bagging nozzles) is <u>not</u> permitted during static pressure decay tests. Sealing of the nozzle vapor holes during a static pressure decay test may mask a defective vapor valve.

4. Leaded and unleaded spouts are interchangeable.

OPW 11VAI Nozzle Specifications

1. An efficiency compliance device (ECD) shall be installed on the OPW 11VAI nozzle at the base of the spout, as shown in Figure 2C-1. Any nozzle with an ECD which is missing, or which is damaged such that at least one-fourth (1/4) of the circumference is missing, or which has cumulative damage equivalent to at least 1/4 of the circumference missing, is defective and shall be immediately removed from service.

2. The OPW 11VAI nozzle has an aluminum spout which has a total of 12 vapor recovery holes. Failure mode testing demonstrated that blockage of some of the vapor collection holes in the spout has negligible effect on the operation of the system until only one hole remains unblocked. Any OPW 11VAI nozzle which is found to have less than two unobstructed vapor collection holes is defective and shall be immediately removed from service.

Husky V34 6250 Nozzle Specifications

1. The Husky V34 6250 nozzle shall be operated with a vapor splash guard (VSG). The Husky V34 6250 nozzle does not have a coaxial spout with vapor recovery holes, but conducts vapors with the VSG. As shown in Figure 2C-2, there is a small hole at the base of the VSG to prevent a complete seal with the fill pipe and avoid over pressurization of the vehicle fuel tank Any nozzle with a VSG which is missing, or which is damaged with at least a one inch-slit, or which has cumulative damage equivalent to at least a one inch slit, is defective and shall be immediately removed from service.

2. Any VSG which compresses more than one-half (0.5) inches when a vertical force of 1.5 pounds is applied is defective and shall be immediately removed from service.

Dispensing Rate

1. The the dispensing rate for installations of the INTELLIVAC System shall not exceed 10.0 gallons per minute when only one nozzle associated with the product supply pump is operating. This shall be determined as specified in Exhibit 4.

2. The dispensing rate shall be not less than 6.0 gallons per minute when measured at the highest possible flowrate and when only one nozzle associated with the product supply pump is operating.

Inverted Coaxial Hoses

1. The length of hose which may be in contact with the island and/or ground when the nozzle is properly mounted on the dispenser is limited to six inches (6").

2. The maximum length of the hose shall be fifteen feet (15').

Breakaway Couplings

1. Breakaway couplings are optional but, if installed, only CARB certified breakaways which close the vapor path may be used.

INTELLIVAC System

1. The INTELLIVAC system Franklin Electric Model Number 9430000XXX (where XXX = 001 to 999) shall consist of an integrated vapor recovery unit made up of an electronic (computerized) control unit and a one-eighth (1/8) hp alternating current electric motor that drives a variable speed rotary vane pump. As the flow of fuel changes, the INTELLIVAC system responds with a change in pump speed to maintain a vapor to liquid ratio of 1.0.

   The normal operating range of the system, as measured by air-to-liquid (A/L) ratio testing, is 0.98 plus or minus 0.10 (0.88 to 1.08). The A/L ratio of the system shall be measured at a flowrate between six and ten gallons per minute (6 to 10 gpm). The measurements shall be taken not including the nozzle aspirator port. Any fueling point not capable of demonstrating compliance with this performance standard shall be deemed defective and removed from service. The A/L ratio shall be determined by CARB TP-201.5 or

district-approved test procedure. Alternative test procedures may be used if they are determined by the Executive Officer to yield comparable results.

NOTE: This test procedure returns air rather than vapor to the storage tank, and normally causes an increase in storage tank pressure which may result in vent emissions. This is a temporary condition due to the test and should not be considered an indication of malfunction or noncompliance.

2. The INTELLIVAC system shall have the following electronic protective features:

   a) Over-Temperature Protection. The system shall shut down if the pump exceeds 90 degrees Celsius. Once shut down, the system shall reset automatically when the pump cools down below 80 degrees Celsius.

   b) Voltage Protection. For systems designed to operate with 115 volts, the system electronic controls shall automatically regulate voltages of 90 to 135 volts to provide the proper operating voltage for the motor. Voltages outside of this range shall cause the system to shut down (i.e., high voltage may result in over heating and/or power levels being exceeded). For systems designed to operate with 230 volts, the operating voltage range is specified at 180 to 270 volts.

   c) Power Level Control. The system shall automatically sense conditions that cause high power levels and shut down. Conditions causing high power levels are such as blocked pump inlets, locked rotor condition of the motor, shorted motor windings, pump overload conditions. An error signal shall be sent to the master control inside the service station. The system shall then restart automatically. This "shut down-send signal-wait-restart" cycle will occur three times. On the third cycle it shall not restart automatically. Instead it must be manually reset by a "restart signal" from the service station.

3. The system shall generate an error signal if a liquid blockage in the vapor path is sustained for more than 15 seconds.

Dispenser Specifications

1. If the INTELLIVAC system is installed in dispensers other than those specified in Exhibit 1 of this Order, then each dispenser shall be:

   a) CARB-certified in the applicable revision of Executive Order G-70-52, or exempt under the provisions of Exhibit 2, Footnote 4, of that Order.

   b) Electronically compatible with the INTELLIVAC system, which must be capable of displaying the electronic protective features as specified in this Exhibit.

   c) Tested for compliance with air to liquid ratio limits contained in this Exhibit. The test shall be conducted at least upon equipment installation in accordance with TP 201.5, or an alternative test method approved by the Executive Officer.

Pressure/Vacuum Valves for Storage Tank Vents

1. A pressure/vacuum (P/V) valve shall be installed on each atmospheric tank vent. Vent pipes may be manifolded to minimize the number of P/V valves and potential leak sources, provided the manifold is installed at a height not less than 12 feet above the driveway surface used for Phase I tank truck filling operations. At least one P/V valve shall be installed on manifolded vents. If two P/V valves are desired, they shall be installed in parallel, so that each can serve as a backup for the other if one should fail to open properly. The P/V valve shall be a CARB-certified valve as specified in Exhibit 1. The outlets shall vent upward and be located to eliminate the possibility of vapor accumulating or traveling to a source of ignition or entering adjacent buildings.

Vapor Recovery Piping Configurations

1. The recommended maximum allowable pressure drop through the system, measured at a flow rate of 60 SCFH with dry Nitrogen gas, is 0.02 inches water column (0.03 inches wc at 60 SCFH if the measurement includes an impact valve). The maximum allowable pressure drop through the system shall never exceed one/half inch (0.5") water column at 60 SCFH. The pressure drop shall be measured from the dispenser riser to the UST with the pressure/vacuum valves installed and with the poppeted Phase I vapor connection open.

2. All vapor return lines shall slope a minimum of 1/8 inch per foot. A slope of 1/4 inch or more per foot is recommended wherever feasible.

3. The dispenser shall be connected to the riser with either flexible or rigid material which is listed for use with gasoline. The dispenser-to-riser connection shall be installed so that any liquid in the lines will drain toward the storage tank. The internal diameter of the connector, including all fittings, shall not be less than five-eighths inch (5/8").

4. The recommended nominal inside diameter of the underground Phase II plumbing is as indicated in Figures 2A-1 through 2A-4. Smaller vapor lines are not recommended but may be used provided the pressure drop criteria specified above are met. The vapor return lines shall be manifolded below grade at the tanks as indicated in the figures.
   Exception: For installations with a vapor return line directly to only one tank, and for which a manifold on the tank vents will be used to provide part of the vapor return path to other tanks, the vent manifold may be used as an alternative to the underground manifold only in existing installations where the vapor piping is already installed, and shall not be used in "new" installations where vapor piping is being installed. For installations with dedicated vapor piping directly to each tank, the vent manifold is approved for both new and existing installations and an additional tank manifold below grade is optional, but not required.

5. All vapor return and vent piping shall be installed in accordance with the manufacturer's instructions and all applicable regulations.

6. No product shall be dispensed from any fueling point associated with a vapor line which is disconnected and open to the atmosphere. If vapor lines are manifolded, this includes all fueling points in the facility.

Phase I System

WARNING: Phase I fill caps should be opened with caution because the storage tank may be under pressure.

1. The local district may require the installation of a threaded tap at least 1/8" in diameter at which the underground storage tank (UST) pressure may be monitored. The tap may be in the dispenser riser connection or on the vent line, and shall be accessible for connection to a pressure gauge. One tap is adequate for manifolded systems. The tap shall remain plugged and vapor tight except when test equipment is being connected to or removed from it. The system shall not be allowed to operate when the taps are not vapor tight. If located on the vent line, the tap shall be at least six feet (6') and not more than eight feet (8') above grade. A high-quality quick-connect fitting with a vapor-tight cap may be installed instead of a plug if specified by the district.

2. The Phase I system shall be a CARB-certified system which is in good working order and which demonstrates compliance with the static pressure decay test criteria as specified in Exhibit 3 when tested with all fill caps removed. **Coaxial Phase I systems shall not be used with new installations of the system**. Replacement of storage tanks at existing facilities, or modifications which cause the installation of new or replacement Phase I vapor recovery equipment, are considered new installations with regard to this prohibition. An exception to this prohibition may be made for coaxial Phase I systems CARB-certified after January 1, 1994, as compatible for use with Phase II systems which require pressure/vacuum vent valves.

   Where installation of the Franklin Electric INTELLIVAC system is made by retrofitting previously installed equipment, local districts may elect to allow existing coaxial Phase I systems to remain in use for a specifically identified period of time provided the following conditions are met:

   - the existing coaxial Phase I system is a poppeted, CARB-certified system; and
   - installation of the Phase II system requires no modification of the UST(s) and/or connections.

3. Spill containment manholes which have drain valves shall demonstrate compliance with the static pressure decay criteria with the drain valves installed as in normal operation. Manholes with cover-actuated drain valves shall not be used in new installations (as defined above). Manholes with cover-actuated drain valves may remain in use in facilities where installation of the Franklin Electric INTELLIVAC system does not require modification of the tank fittings provided the facility demonstrates compliance with static pressure decay test criteria both with the cover open and with the cover closed.

4. Phase I deliveries shall be accomplished so as to ensure that there is at least one vapor connection between the cargo tank compartment headspace and the storage tank associated with the product delivery. There shall be no more than two product hoses used with one with one vapor hose connected, and no more than three product hoses used with two vapor hoses connected.

5. Storage tank vent pipes, and fill and vapor and manhole tops, shall be maintained white, silver or beige. Colors which will similarly prevent heating of the system due to solar gain may also be used, provided they are listed in EPA AP-42 as having a factor the same as or better than that of the colors listed above. Manhole covers which are color coded for product identification are exempted from this requirement.

6. The Phase I vapor recovery system shall be operated during product deliveries so as to minimize the loss of vapors from the facility storage tank which may be under pressure. Provided it is not in conflict with established safety procedures, this may be accomplished in the following manner:

    - the Phase I vapor return hose is connected to the delivery tank and to the delivery elbow before the elbow is connected to the facil ty storage tank;

    - the delivery tank is opened only after all vapor connections have been made, and is closed before connection of any vapor return hoses;

    - the existing coaxial Phase I equipment is in good working order and has demonstrated compliance with static pressure decay test criteria when tested with all fill caps removed; and

    - the vapor return hose is disconnected from the facility storage tank before it is disconnected from the delivery tank.

Executive Order G-70-169

Exhibit 2

Figure 2A-1

Typical Installation of the
Intellivac Phase II Vapor Recovery System
With Two-Point Phase I System

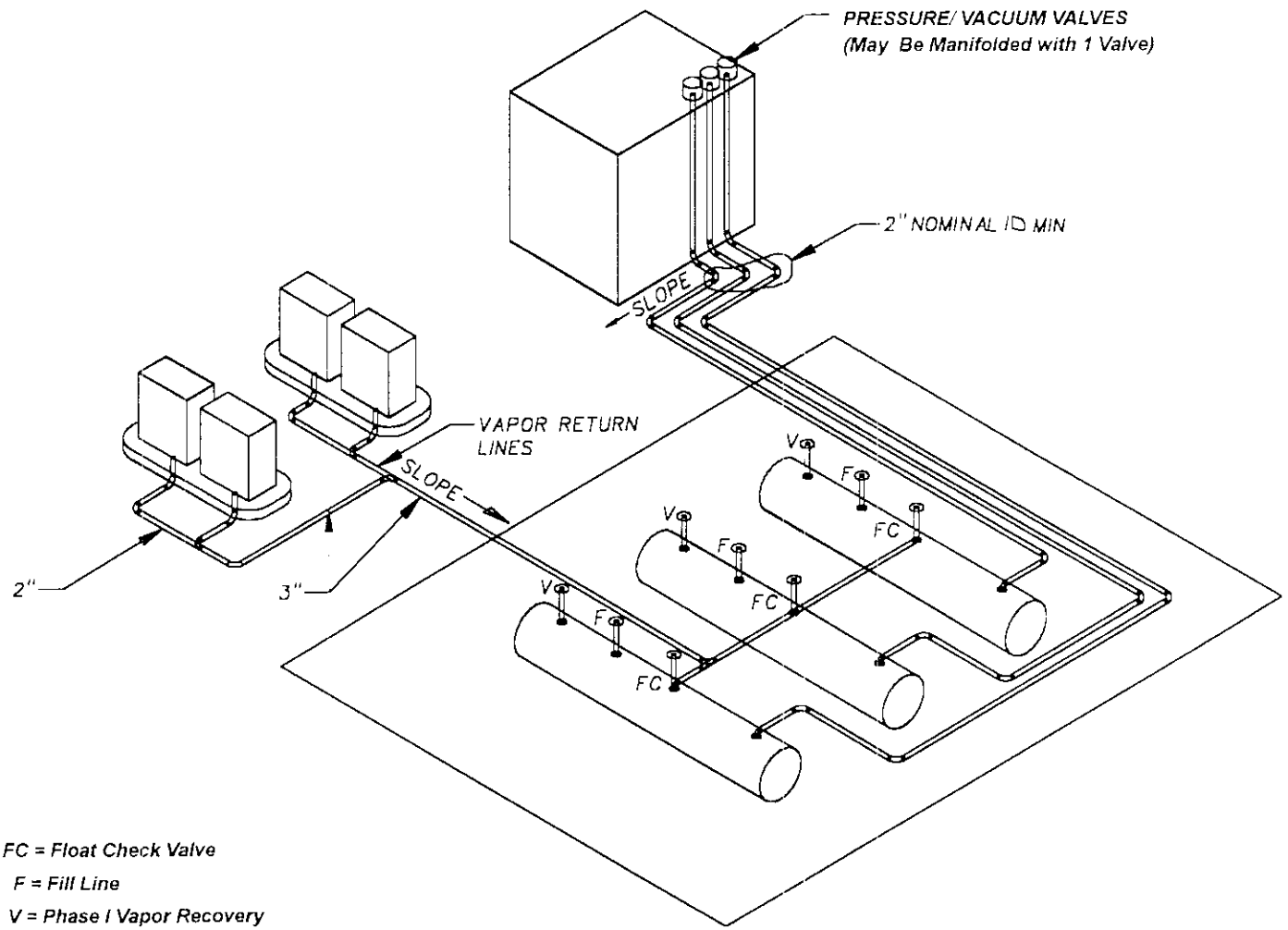

FC = Float Check Valve

F = Fill Line

V = Phase I Vapor Recovery

Note: 1. All Vapor/Vent Lines are 3" Nominal ID Minimum Except as Noted

2. Slope: 1/8" per foot Min.

1/4" per Foot Prefered

3. Maintain 2'0" Clearance Between Fill Line and

Phase I Vapor Return Line to Delivery Truck

Executive Order G-70-169

Exhibit 2

Figure 2A-2

Typical Installation of the
Intellivac Phase II Vapor Recovery System
With Two-Point Phase I System

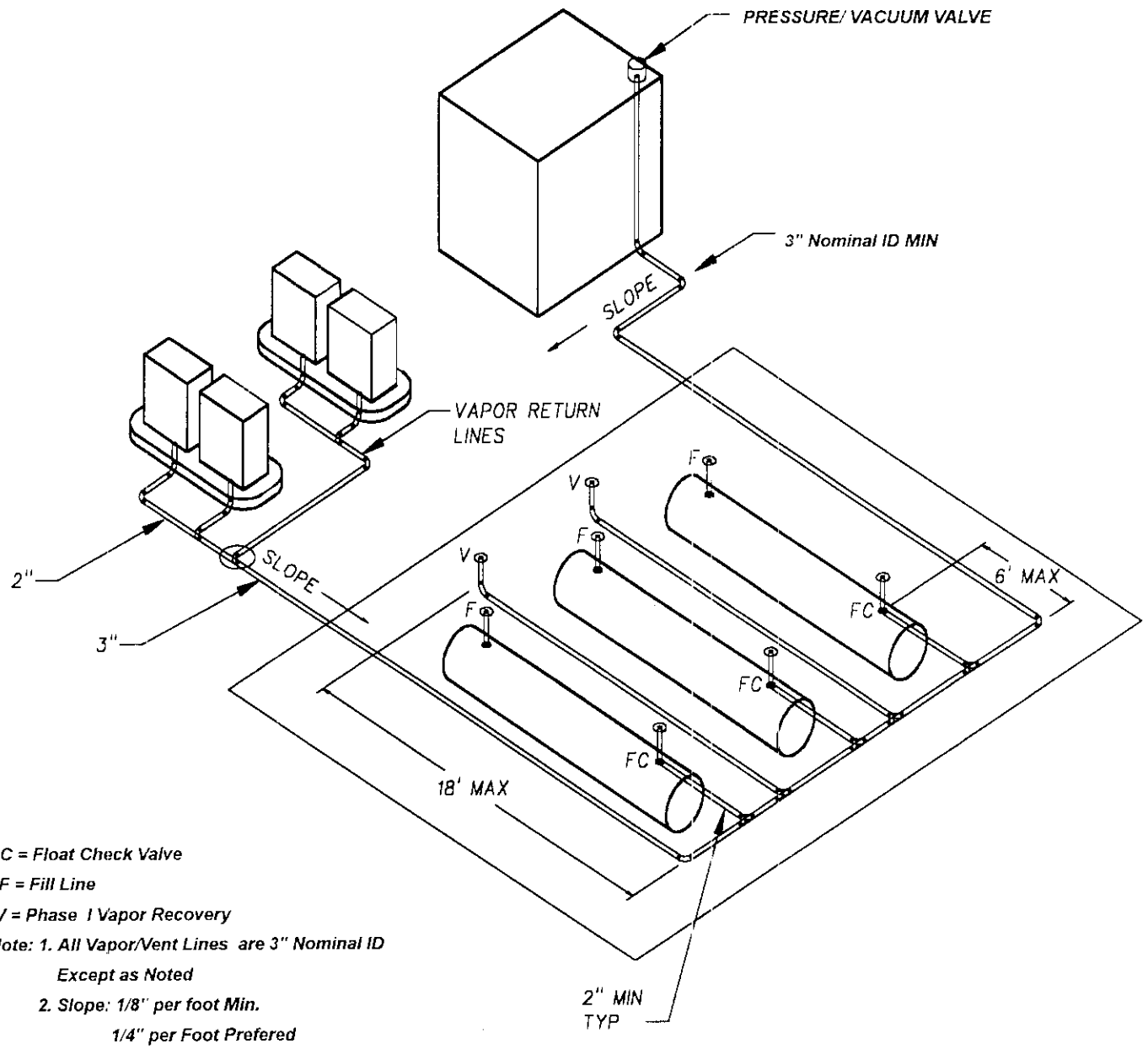

FC = Float Check Valve
F = Fill Line
V = Phase I Vapor Recovery

Note: 1. All Vapor/Vent Lines are 3" Nominal ID Except as Noted
2. Slope: 1/8" per foot Min. 1/4" per Foot Prefered
3. Maintain 2'0" Clearance Between Fill Line and Phase I Vapor Return Line to Delivery Truck
4. No less than one vapor return hose must be connected for each product being delivered

Executive Order G-70-169

Exhibit 2

Figure 2A-3

Typical Installation of the
Intellivac Phase II Vapor Recovery System
With Two-Point Phase I System

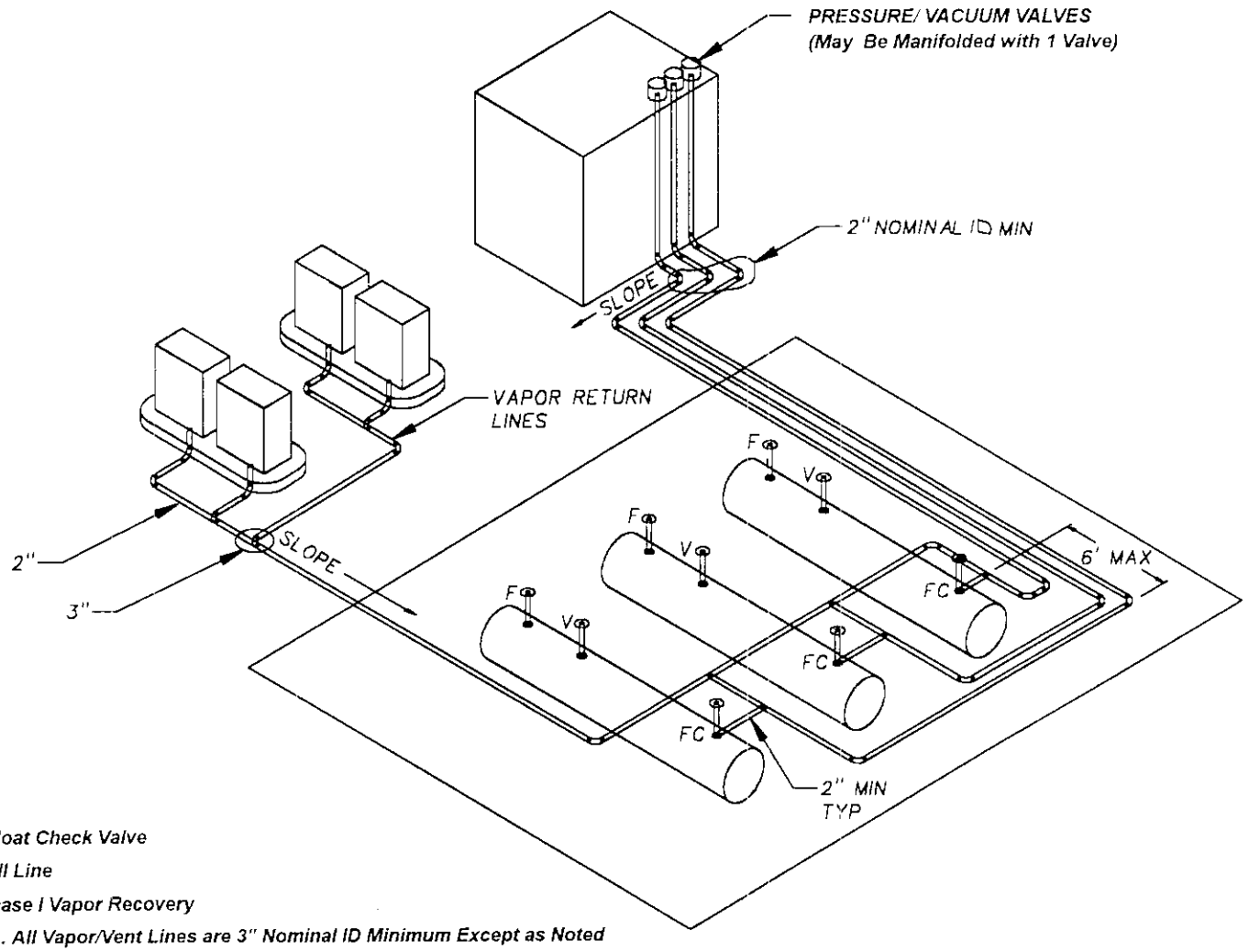

FC = Float Check Valve
F = Fill Line
V = Phase I Vapor Recovery

Note: 1. All Vapor/Vent Lines are 3" Nominal ID Minimum Except as Noted
2. Slope: 1/8" per foot Min.
1/4" per Foot Prefered
3. Maintain 2'0" Clearance Between Fill Line and
Phase I Vapor Return Line to Truck

Executive Order G-70-169

Exhibit 2

Figure 2A-4

Typical Installation of the
Intellivac Phase II Vapor Recovery System
With Two-Point Phase I System

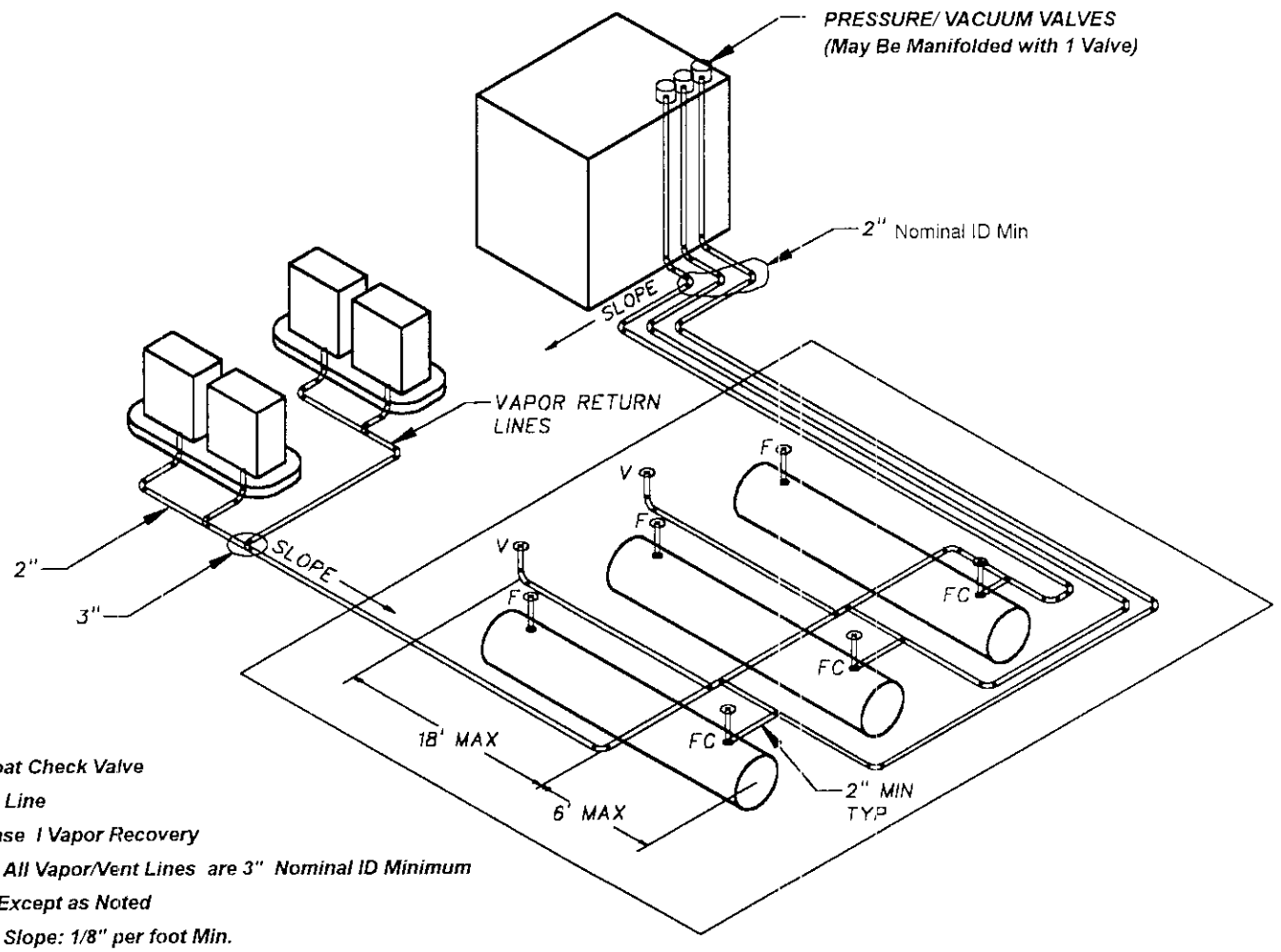

FC = Float Check Valve
F = Fill Line
V = Phase I Vapor Recovery

Note: 1. All Vapor/Vent Lines are 3" Nominal ID Minimum Except as Noted
2. Slope: 1/8" per foot Min. 1/4" per Foot Prefered
3. Maintain 2'0" Clearance Between Fill Line and Phase I Vapor Return Line to Delivery Truck
4. No less than one vapor return hose must be connected for each product being delivered

Executive Order G-70-169

Exhibit 2

Figure 2B

INTELLIVAC Vapor Pump System

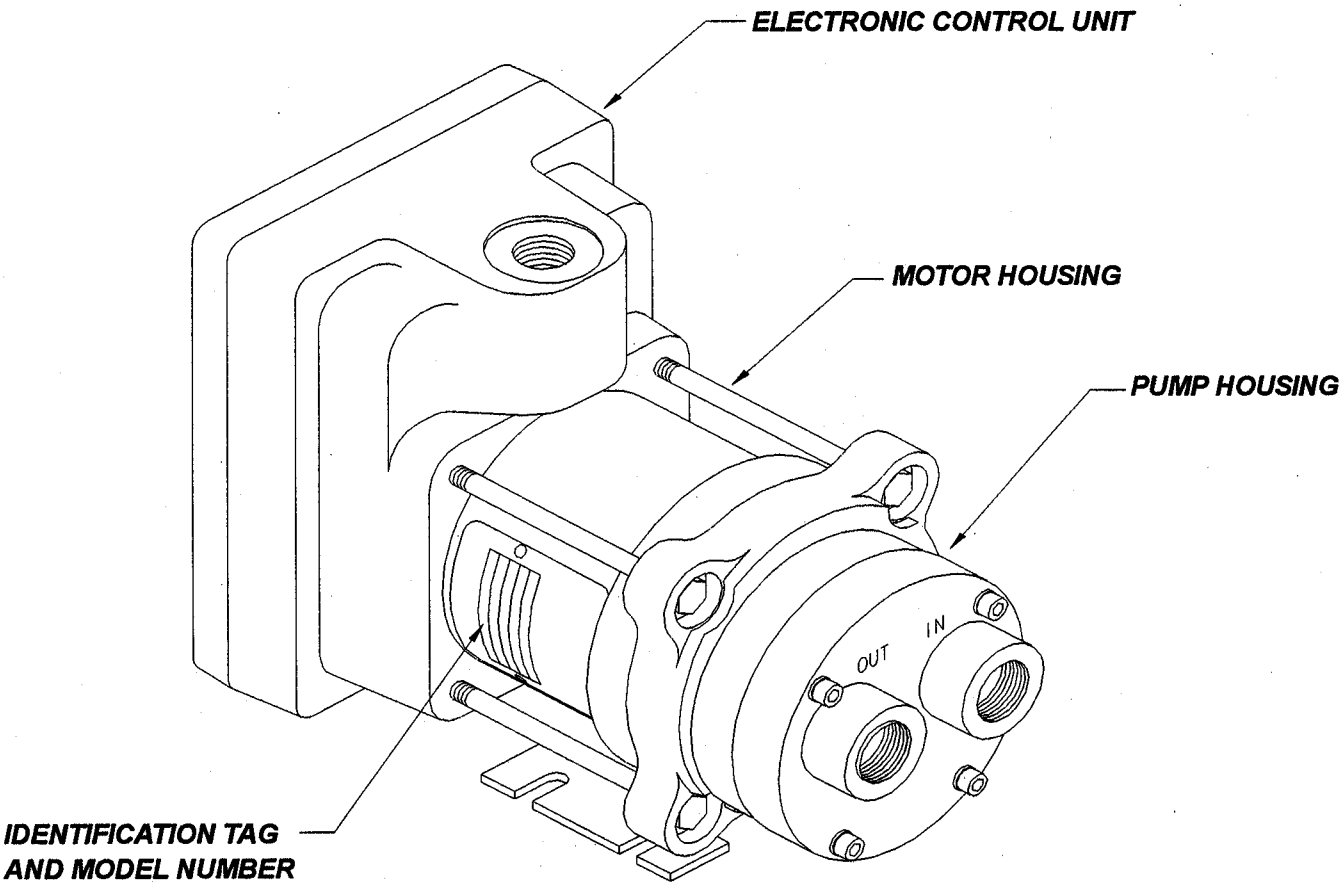

Executive Order G-70-169

Exhibit 2

Figure 2C-1

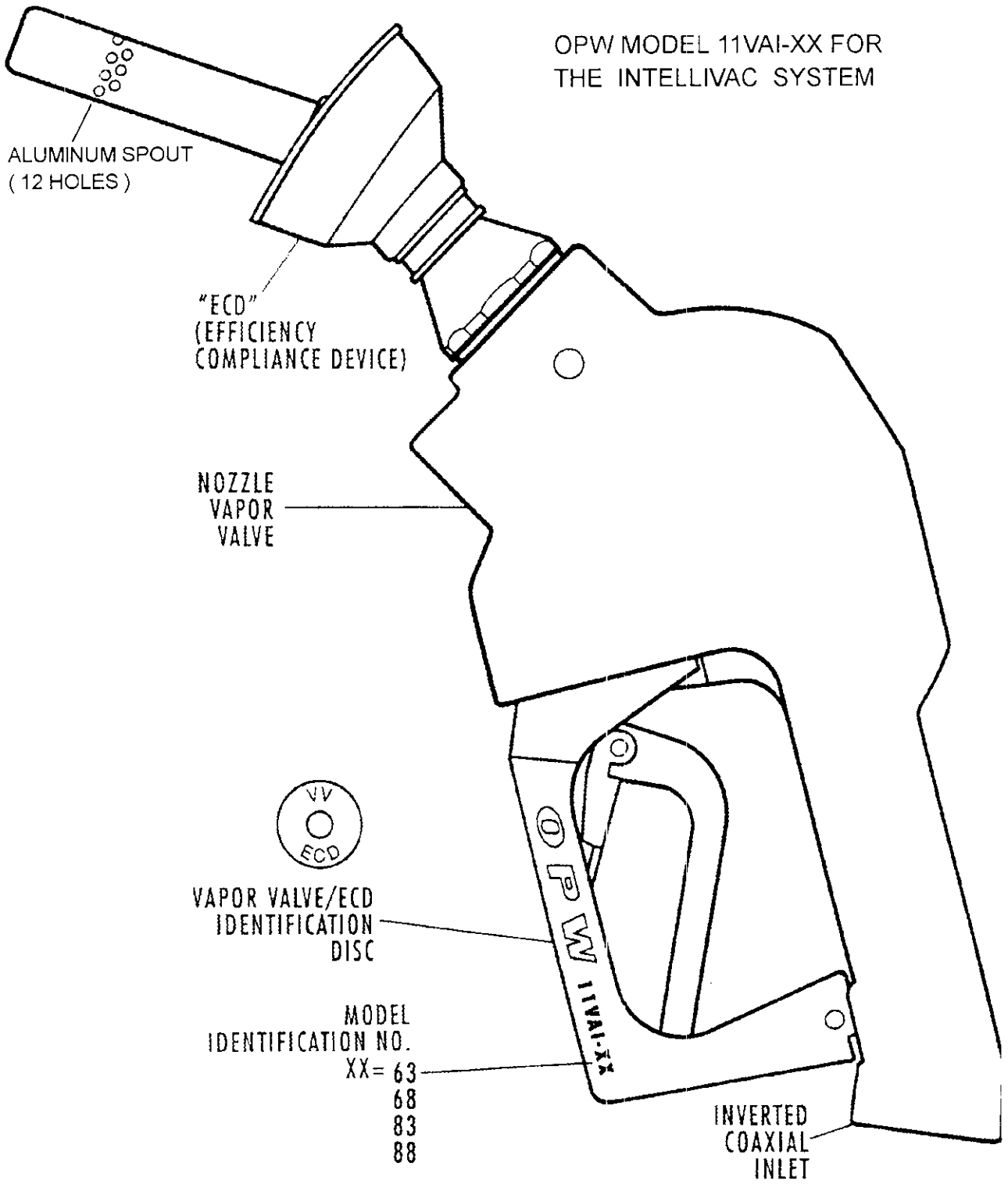

Executive Order G-70-169

Exhibit 2

Figure 2C-2

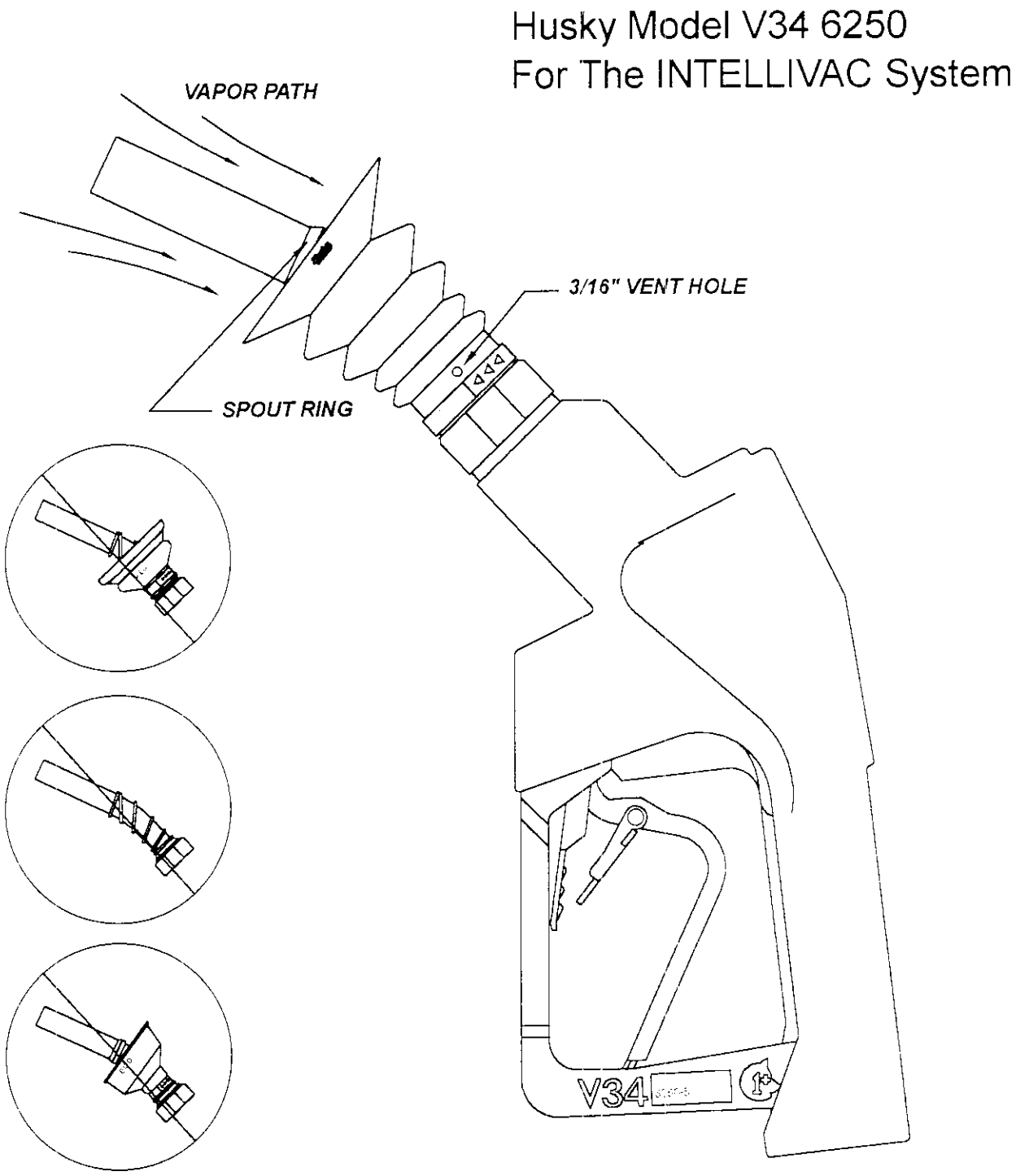

Executive Order G-70-169

Franklin Electric INTELLIVAC Phase II Vapor Recovery System

Exhibit 3

STATIC PRESSURE INTEGRITY TEST UNDERGROUND STORAGE TANKS

1. APPLICABILITY

1.1 This test procedure is used to quantify the vapor tightness of vapor recovery systems installed at gasoline dispensing facilities (GDF) equipped with vacuum assist systems which require pressure/vacuum (P/V) valves, provided that the designed pressure setting of the P/V valves is a minimum of 2.5 inches of water column (inches H_2O). Excessive leaks in the vapor recovery system will increase the quantity of fugitive hydrocarbon emissions and lower the overall efficiencies of both the Phase I and Phase II vapor recovery systems.

2. PRINCIPLE

2.1 The entire vapor recovery system is pressurized with nitrogen to two (2.0) inches H_2O. The system pressure is then allowed to decay and the pressure after five (5) minutes is compared with an allowable value. The minimum allowable five-minute final pressure is based on the system ullage and pressure decay equations. For the purpose of compliance determination, this test shall be conducted after all back-filling, paving, and installation of all Phase I and Phase II components, including P/V valves, has been completed.

2.2 For GDF equipped with a coaxial Phase I system, this test shall be conducted at a Phase II vapor riser. For GDF which utilize a two-point Phase I system, this test may be conducted at either a Phase II riser or a Phase I vapor coupler provided that the criteria set forth in Section 6.7 have been met. If the integrity criteria for two-point systems specified in Section 6.7 are met, it is recommended that this test be conducted at the Phase I vapor coupler.

3. RANGE

3.1 If mechanical pressure gauges are employed, the full-scale range of the pressure gauges shall be 0-2.0, 0-1.0, and 0-0.50 inches H_2O column. Maximum incremental graduations of the pressure gauge shall be 0.05 inches H_2O and the minimum accuracy of the gauge shall be three percent of full scale. The minimum diameter of the pressure gauge face shall be 4 inches. A 0-2 inches H_2O inclined manometer, or equivalent, may be used provided that the minor scale divisions do not exceed 0.02 inches H_2O.

3.2 If an electronic pressure measuring device is used, the full-scale range of the device shall not exceed 0-10 inches H_2O with a minimum accuracy of 0.5 percent of full-scale. A 0-20 inches H_2O device may be used, provided the equivalent accuracy is not less than 0.25 percent of full scale.

*Reference Bay Area Air Quality Management District Source Test Procedure ST-30

3.3 The minimum and maximum total ullages shall be 500 and 25,000 gallons, respectively. These values are exclusive of all vapor piping volumes.

3.4 The minimum and maximum nitrogen feed-rates, into the system, shall be one (1) and five (5) CFM, respectively.

4. INTERFERENCES

4.1 Introduction of nitrogen into the system at flowrates exceeding five (5) CFM may bias the results of the test toward non-compliance. Only gaseous nitrogen shall be used to conduct this test. Air, liquified nitrogen, helium, or any gas other than nitrogen **shall not be used** for this test procedure.

4.2 The results of this Static Pressure Integrity Test shall not be used to verify compliance if an Air to Liquid Volumetric Ratio Test (Test Procedure TP-210.5 or equivalent) was conducted within the 24 hours prior to this test.

5. APPARATUS

5.1 Nitrogen. Use commercial grade nitrogen in a high pressure cylinder, equipped with a two-stage pressure regulator and a one psig pressure relief valve.

5.2 Pressure Measuring Device. Use 0-2.0, 0-1.0, and 0-0.50 inches H_2O pressure gauges connected in parallel, a 0-2 inches H_2O manometer, or an electronic pressure measuring device to monitor the pressure decay in the vapor recovery system. The pressure measuring device shall, at a minimum, be readable to the nearest 0.05 inches H_2O.

5.3 "T" Connector Assembly. See Figure 3-1 for example.

5.4 Vapor Coupler Integrity Assembly. Assemble OPW 633-A, 633-B, and 634-A adapters, or equivalent, as shown in Figure 3-2. If the test is to be conducted at the storage tank Phase I vapor coupler, this assembly shall be used prior to conducting the static leak test in order to verify the pressure integrity of the vapor poppet. The internal volume of this assembly shall not exceed 0.1 cubic feet.

5.5 Vapor Coupler Test Assembly. Use a compatible OPW 634-B cap, or equivalent, equipped with a center probe to open the poppet, a pressure measuring device to monitor the pressure decay, and a connection for the introduction of nitrogen into the system. See Figure 3-3 for an example.

5.6 Stopwatch. Use a stopwatch accurate to within 0.2 seconds.

5.7 Flowmeter. Use a Dwyer flowmeter, Model RMC-104, or equivalent, to determine the required pressure setting of the delivery pressure gauge on the nitrogen supply pressure regulator. This pressure shall be set such that the nitrogen flowrate is between 1.0 and 5.0 CFM.

Figure 3-1

"T" Connector Assembly

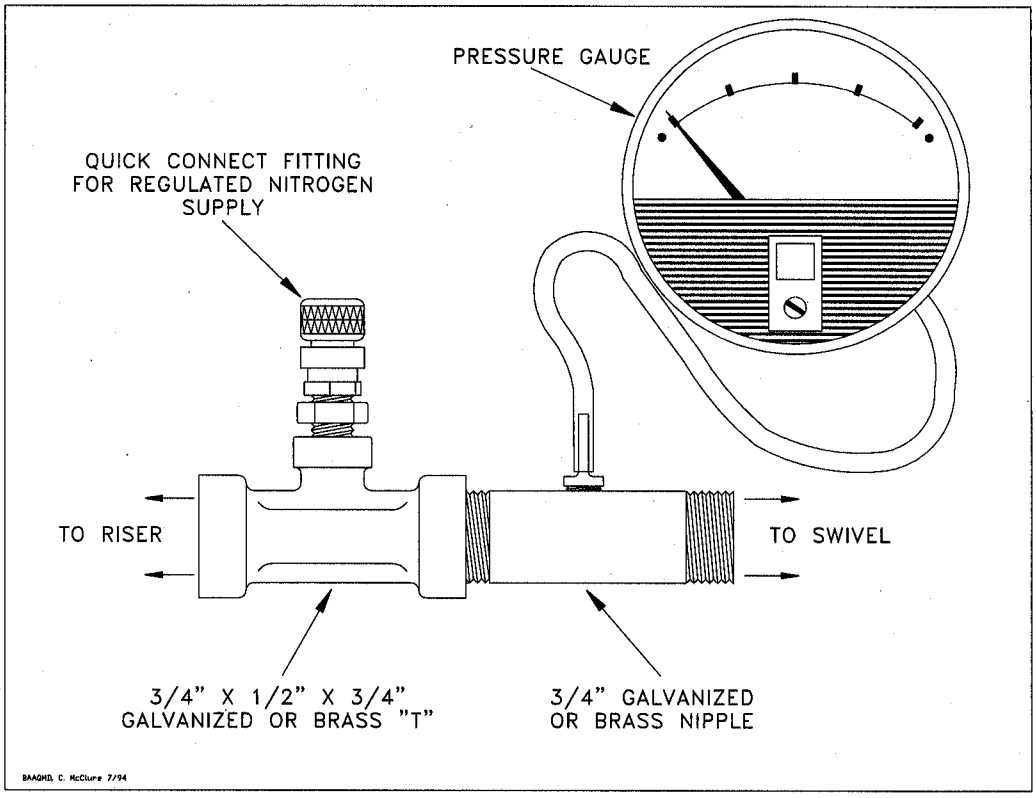

Figure 3-2

Vapor Coupler Integrity Assembly

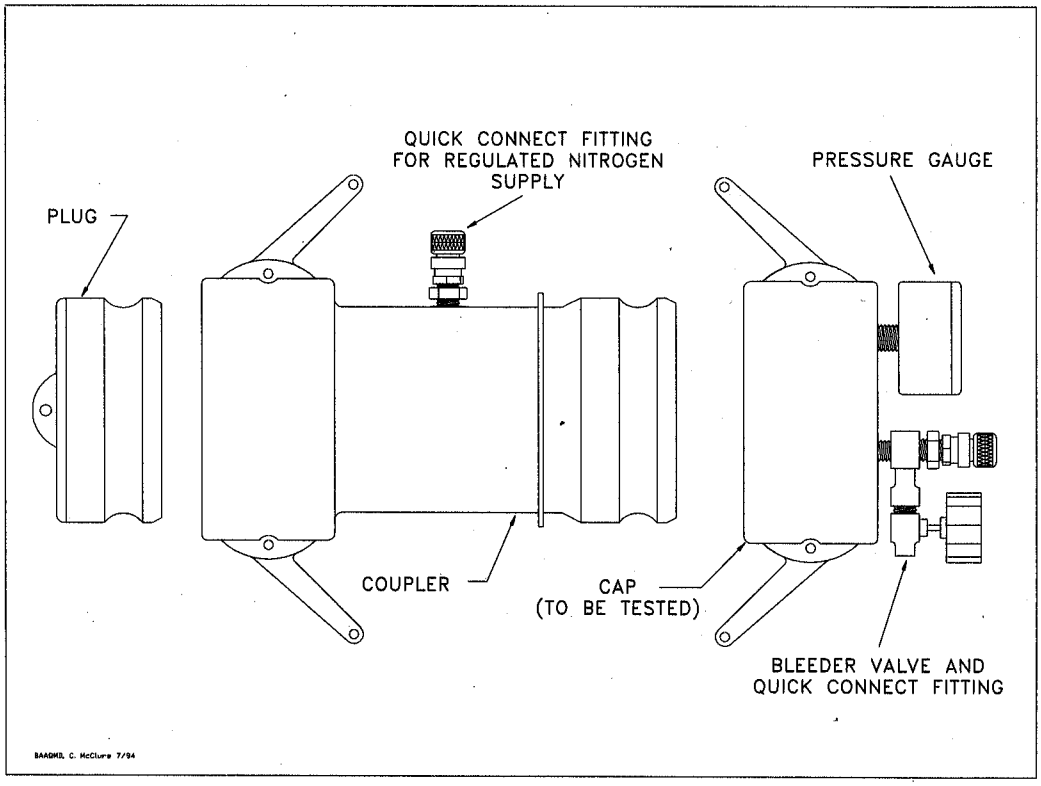

5.8 Combustible Gas Detector. A Bacharach Instrument Company, Model 0023-7356, or equivalent, may be used to verify the pressure integrity of system components during this test.

5.9 Leak Detection Solution. Any liquid solution designed to detect vapor leaks may be used to verify the pressure integrity of system components during this test.

Figure 3-3

Vapor Coupler Test Assembly

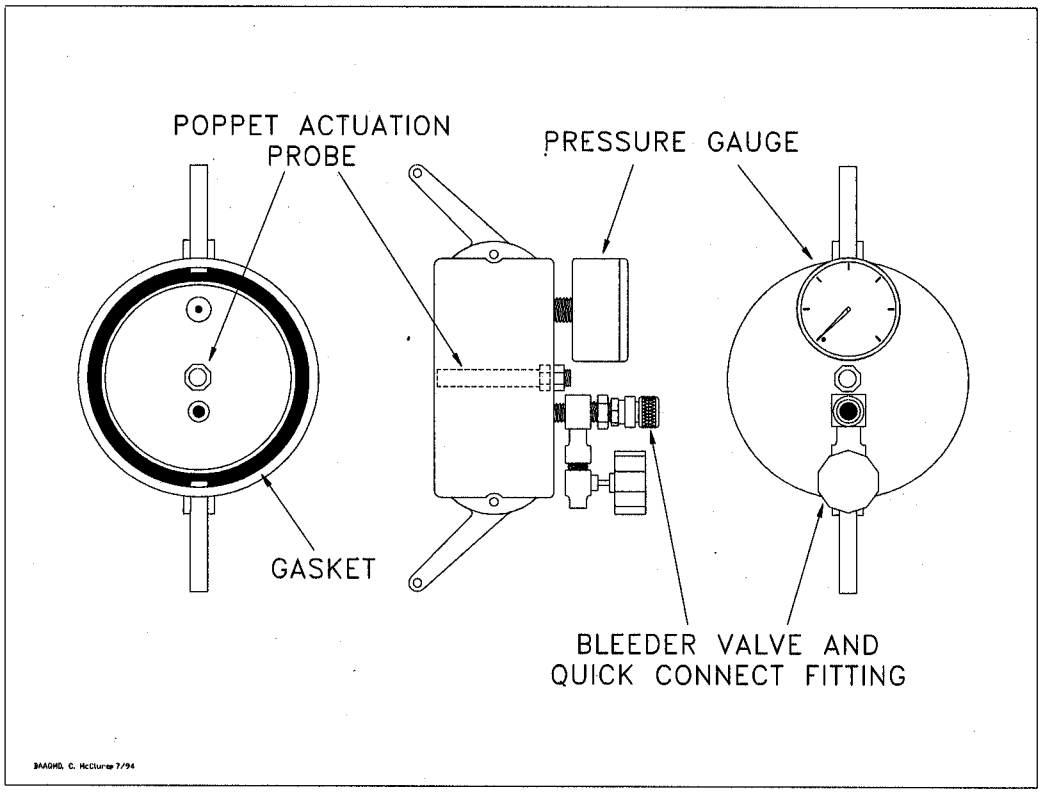

6. PRE-TEST PROCEDURES

6.1 The following safety precautions shall be followed:

6.1.1 Only nitrogen shall be used to pressurize the system.

6.1.2 A one psig relief valve shall be installed to prevent the possible over-pressurizing of the storage tank.

6.1.3 A ground strap should be employed during the introduction of nitrogen into the system.

6.2 Failure to adhere to any or all of the following time and activity restrictions shall invalidate the test results:

6.2.1 There shall be no Phase I bulk product deliveries into or out of the storage tank(s) within the three (3) hours prior to the test or during performance of this test procedure .

6.2.2 There shall be no product dispensing within thirty (30) minutes prior to the test or during performance of this test procedure.

6.2.3 Upon commencement of the thirty minute "no dispensing" portion of this procedure, the headspace pressure in the tank shall be measured. If the pressure exceeds 0.50 inches H_2O, the pressure shall be carefully relieved in accordance with all applicable safety requirements. After the thirty minute "no dispensing" portion of this procedure, and prior to introduction of nitrogen, the headspace pressure shall again be lowered, if necessary, to less than 0.50 inches H_2O.

6.2.4 There shall be no Air to Liquid Volumetric Ratio Test (Test Procedure TP-201.5) conducted within the twenty-four (24) hour period immediately prior to this test.

6.3 Measure the gallons of gasoline present in each underground storage tank and determine the actual capacity of each storage tank from facility records. Calculate the ullage space for each tank by subtracting the gasoline gallonage present from the actual tank capacity. The minimum ullage during the test shall be 25 percent of the tank capacity or 500 gallons, whichever is greater. The total ullage shall not exceed 25,000 gallons.

6.4 For two-point Phase I systems, this test shall be conducted with the dust cap removed from the vapor coupler. This is necessary to determine the vapor tightness of the Phase I vapor poppet. See Section 6.7 if this test is to be conducted at the Phase I vapor coupler.

6.4.1 For coaxial Phase I systems, this test shall be conducted with the dust cap removed from the Phase I coupler. This is necessary to insure the vapor tightness of the Phase I vapor poppet.

6.4.2 Verify that the liquid level in the storage tank is at least four (4) inches above the highest opening at the bottom of the submerged drop tube.

6.5 If the Phase I containment box is equipped with a drain valve, the valve assembly may be cleaned and lubricated prior to the test. This test shall, however, be conducted with the drain valve installed and the manhole cover removed. See subsection 7.4.1 for further details regarding containment box drain valves.

6.6 If the test is to be conducted at a Phase II vapor riser, disconnect the dispenser end of one vapor recovery hose and install the "T" connector assembly (see Figure 3-1). Connect the nitrogen gas supply (do not use air) and the pressure measuring device to the "T" connector.

6.6.1 For those Phase II systems utilizing a dispenser mounted remote vapor check valve, the "T" connector assembly shall be installed on the vapor riser side of the check valve.

6.7 If this test is to be conducted at the Phase I vapor coupler on a two-point Phase I system, the procedures set forth in subsections 6.7.1 and 6.7.2 shall be successfully completed prior to testing. The static pressure integrity test

shall not be conducted at the Phase I coupler at facilities equipped with coaxial Phase I systems.

6.7.1 Connect the Vapor Coupler Integrity Assembly to the Phase I vapor coupler. Connect the Vapor Coupler Test Assembly. Connect the nitrogen supply to the assembly and carefully pressurize the internal volume of the assembly to two (2.0) inches H_2O. Start the stopwatch. Record the final pressure after one minute.

6.7.2 If the pressure after one minute is less than 0.25 inches H_2O, the leak rate through the Phase I vapor poppet precludes conducting the static leak test at this location. If the pressure after one minute is greater than or equal to 0.25 inches H_2O, the static leak test may be conducted at this location. This criteria assures a maximum leak rate through the Phase I vapor poppet of less than 0.0004 cubic feet per minute.

6.7.3 Disconnect the Vapor Coupler Integrity Assembly from the Phase I vapor coupler. If the requirements of subsection 6.7.2 were met, connect the Vapor Coupler Test Assembly to the Phase I vapor coupler.

6.7.4 As an alternate to the requirements of subsections 6.7.1 through 6.7.3, leak detection solution may be used to verify the absence of vapor leaks through the Phase I vapor poppet on two-point Phase I systems. This alternative leak check is valid only for two-point Phase I systems in which tanks are manifolded. The manifold may be at the vent pipes. Pressurize the system to two (2) inches H_2O and use the leak detection solution to verify a zero leak (absence of bubbles) condition at one of the vapor poppets on the Phase I system.

6.8 All pressure measuring device(s) shall be bench calibrated using either a reference gauge or incline manometer. Calibration shall be performed at 20, 50, and 80 percent of full scale. Accuracy shall be within two percent at each of these calibration points. Calibrations shall be conducted on a frequency not to exceed 90 days.

6.9 Use the flowmeter to determine the nitrogen regulator delivery pressures which correspond to nitrogen flowrates of 1.0 and 5.0 CFM. These pressures define the allowable range of delivery pressures acceptable for this test procedure. Also record the regulator delivery pressure setting, and the corresponding nitrogen flowrate that will be used during the test. As an alternative, the flowmeter may be connected, in-line between the nitrogen supply regulator and Vapor Coupler Test Assembly, during the test.

6.10 Use Equation 9.2 to calculate the approximate time required to pressurize the system ullage to the initial starting pressure of two (2.0) inches H_2O. This will allow the tester to minimize the quantity of nitrogen introduced into those systems which cannot comply with the static leak standards.

6.11 Attach the Vapor Coupler Test assembly to the Phase I poppet or the "T" connector assembly to the Phase II vapor riser. Read the initial pressure of

the storage tank and underground piping. If the initial pressure is greater than 0.5 inches H_2O, carefully bleed off the pressure, in accordance with all applicable safety procedures, in the storage tank and underground piping to less than 0.5 inches H_2O column.

7. TESTING

7.1 Open the nitrogen gas supply valve and set the regulator delivery pressure within the allowable range determined in Section 6.9, and start the stopwatch. Pressurize the vapor system (or subsystem for individual vapor return line systems) to **at least 2.2 inches H_2O** initial pressure. It is critical to maintain the nitrogen flow until the pressure stabilizes, indicating temperature and vapor pressure stabilization in the tanks. Check the test equipment using leak detecting solution or a combustible gas detector to verify that all test equipment is leak tight.

7.1.1 If the time required to achieve the initial pressure of two (2.0) inches H_2O exceeds twice the time derived from Equation 9.2, stop the test and use liquid leak detector, or a combustible gas detector, to find the leak(s) in the system. Failure to achieve the initial starting pressure within twice the time derived from Equation 9.2 demonstrates the inability of the system to meet the performance criteria. Repair or replace the faulty component(s) and restart the test pursuant to Section 7.1.

7.2 Close and disconnect the nitrogen supply. Start the stopwatch when the pressure has decreased to the initial starting pressure of two (2.0) inches H_2O.

7.3 At one-minute intervals during the test, record the system pressure. After five minutes, record the final system pressure. See Table 3-IA (or Equation 9.1) to determine the acceptability of the final system static pressure results. For intermediate values of ullage in Table 3-I, linear interpolation may be employed.

7.4 If the system failed to meet the criteria set forth in Table 3-I (or Equation 9-2), repressurize the system and check all accessible vapor connections using leak detector solution or a combustible gas detector. If vapor leaks in the system are encountered, repair or replace the defective component and repeat the test. Potential sources of leaks include nozzle check valves, pressure/vacuum relief valves, containment box drain valve assemblies, and plumbing connections at the risers.

7.4.1 If the facility fails to comply with the static leak test standards and the Phase I system utilizes a non-CARB-certified drain valve equipped containment box, which was installed prior to July 1, 1992, for which a CARB-certified replacement drain valve assembly is not marketed, the following two subsections shall apply:

7.4.1.1 The drain valve may be removed and the port plugged. Reset the system. If the facility complies with the static leak test standards under these conditions, the facility shall be considered complying with the requirements, provided that the manufacturer and model number

of the containment box and the date of installation are submitted with the test results.

7.4.1.2 The criteria set forth in subsection 7.4.1.1 shall not apply after July 1, 1996.

7.5 After the remaining system pressure has been relieved, remove the "T" connector assembly and reconnect the vapor recovery hose, if applicable.

7.6 If the vapor recovery system utilizes individual vapor return lines, repeat the leak test for each gasoline grade. Avoid leaving any vapor return line open longer than is necessary to install or remove the "T" connector assembly.

7.7 If the containment box has a cover-actuated drain valve, repeat the test with the cover in place. In these cases clearly specify, on Form 3-1, which results represent the pressure integrity with and without the cover in place.

8. POST-TEST PROCEDURES

8.1 Use Table 3-1 or Equation 9.1 to determine the compliance status of the facility by comparing the final five-minute pressure with the minimum allowable final pressure.

9. CALCULATIONS

9.1 The minimum allowable five-minute final pressure, with an initial pressure of two (2.0) inches H_2O, shall be calculated as follows:

[Equation 9-1]

$$P_f = 2e^{\frac{-500.887}{V}} \quad \text{if } N = 1\text{-}6$$

$$P_f = 2e^{\frac{-531.614}{V}} \quad \text{if } N = 7\text{-}12$$

$$P_f = 2e^{\frac{-562.455}{V}} \quad \text{if } N = 13\text{-}18$$

$$P_f = 2e^{\frac{-593.412}{V}} \quad \text{if } N = 19\text{-}24$$

$$P_f = 2e^{\frac{-624.483}{V}} \quad \text{if } N > 24$$

Where:

N = The number of affected nozzles. For manifolded systems, N equals the total number of nozzles. For dedicated plumbing configurations, N equals the number of nozzles serviced by the tank being tested.

P_f = The minimum allowable five-minute final pressure, inches H_2O

V = The total ullage affected by the test, gallons

e = A dimensionless constant approximately equal to 2.718

2 = The initial starting pressure, inches H_2O

9.2 The minimum time required to pressurize the system ullage from zero (0) to two (2.0) inches H_2O gauge pressure shall be calculated as follows:

$$t_2 = \frac{V}{[1522]F} \qquad \text{[Equation 9-2]}$$

Where:

t_2 = The minimum time to pressurize the ullage to two inches H_2O, minutes
V = The total ullage affected by the test, gallons
F = The nitrogen flowrate into the system, CFM
1522 = The conversion factor for pressure and gallons

9.3 If the policy of the local District requires an allowable tolerance for testing error, the minimum allowable five-minute final pressure, including testing error, shall be calculated as follows:

$$P_{f-E} = 2 - \left[1 + \left(\frac{E}{100}\right)\right]\left[408.9 - \left(P_f + 406.9\right)\right] \qquad \text{[Equation 9-3]}$$

Where:

P_{f-E} = The minimum allowable five-minute final pressure including allowable testing error, inches H_2O
E = The allowable testing error, percent
P_f = The minimum allowable five-minute final pressure calculated in Equations 9-1 or 9-2, inches H_2O
2 = The initial starting pressure, inches H_2O
408.9 = Atmospheric pressure plus the initial starting pressure, inches H_2O
406.9 = Atmospheric pressure, inches H_2O

10. REPORTING

10.1 The calculated ullage and system pressures for each five-minute vapor recovery system test shall be reported as shown in Form 3-1. Be sure to include the Phase I system type (two-point or coaxial), the Phase II system type, whether the system is manifolded, and the one-minute pressures during the test.

Executive Order G-70-169

TABLE 3-1A

PRESSURE DECAY LEAK RATE CRITERIA

INITIAL PRESSURE OF 2 INCHES OF H_2O

MINIMUM PRESSURE AFTER 5 MINUTES, INCHES OF H_2O

ULLAGE, GALLONS	NUMBER OF AFFECTED NOZZLES 01-06	07-12	13-18	19-24	> 24
500	**0.73**	**0.69**	**0.65**	**0.61**	**0.57**
550	0.80	0.76	0.72	0.68	0.64
600	**0.87**	**0.82**	**0.78**	**0.74**	**0.71**
650	0.93	0.88	0.84	0.80	0.77
700	**0.98**	**0.94**	**0.90**	**0.86**	**0.82**
750	1.03	0.98	0.94	0.91	0.87
800	**1.07**	**1.03**	**0.99**	**0.95**	**0.92**
850	1.11	1.07	1.03	1.00	0.96
900	**1.15**	**1.11**	**1.07**	**1.03**	**1.00**
950	1.18	1.14	1.11	1.07	1.04
1,000	**1.21**	**1.18**	**1.14**	**1.10**	**1.07**
1,200	1.32	1.28	1.25	1.22	1.19
1,400	**1.40**	**1.37**	**1.34**	**1.31**	**1.28**
1,600	1.46	1.43	1.41	1.38	1.35
1,800	**1.51**	**1.49**	**1.46**	**1.44**	**1.41**
2,000	1.56	1.53	1.51	1.49	1.46
2,200	**1.59**	**1.57**	**1.55**	**1.53**	**1.51**
2,400	1.62	1.60	1.58	1.56	1.54
2,600	**1.65**	**1.63**	**1.61**	**1.59**	**1.57**
2,800	1.67	1.65	1.64	1.62	1.60
3,000	**1.69**	**1.68**	**1.66**	**1.64**	**1.62**
3,500	1.73	1.72	1.70	1.69	1.67
4,000	**1.76**	**1.75**	**1.74**	**1.72**	**1.71**
4,500	1.79	1.78	1.77	1.75	1.74
5,000	**1.81**	**1.80**	**1.79**	**1.78**	**1.77**
6,000	1.84	1.83	1.82	1.81	1.80
7,000	**1.86**	**1.85**	**1.85**	**1.84**	**1.83**
8,000	1.88	1.87	1.86	1.86	1.85
9,000	**1.89**	**1.89**	**1.88**	**1.87**	**1.87**
10,000	1.90	1.90	1.89	1.88	1.88
15,000	**1.93**	**1.93**	**1.93**	**1.92**	**1.92**
20,000	1.95	1.95	1.94	1.94	1.94
25,000	**1.96**	**1.96**	**1.96**	**1.95**	**1.95**

Note: For manifolded Phase II Assist Systems, the "**Number of Affected Nozzles**" shall be the total of all gasoline nozzles. For dedicated return configurations, the "**Number of Affected Nozzles**" shall be the total of those nozzles served by the tank being tested.

Executive Order G-70-169, Exhibit 3, Form 3-1

Distribution:	Summary of Source Test Results	Report No.: _____ Test Date: _____ Test Times: Run A: _____ Run B: _____ Run C: _____

Source Information		Facility Parameters
GDF Name and Address	GDF Representative and Title	PHASE I SYSTEM TYPE (Check One)
_____	_____	Two Point ☐
_____	_____	Coaxial ☐
_____	GDF Phone No. ( )	Coaxial with Spill Prevention
_____	Source: GDF Vapor Recovery System	PHASE II SYSTEM TYPE ☐
Permit Conditions	GDF # _____	Franklin Electric INTELLIVAC
	A/C # _____	Manifolded? Y or N

Operating Parameters:

Number of Nozzles Served by Tank #1 _____ Number of Nozzles Served by Tank #3 _____

Number of Nozzles Served by Tank #2 _____ Total Number of Gas Nozzles at Facility _____

Applicable Regulations:	FOR OFFICE USE ONLY

Source Test Results and Comments:

TANK #:	1	2	3	TOTAL
1. Product Grade				
2. Actual Tank Capacity, gallons				
3. Gasoline Volume, Gallons				
4. Ullage, gallons (#2 -#3)				
5. Phase I System Type				
6. Initial Test Pressure, Inches H_2O **(2.0)**				
7. Pressure After 1 Minute, Inches H_2O				
8. Pressure After 2 Minutes, Inches H_2O				
9. Pressure After 3 Minutes, Inches H_2O				
10. Pressure After 4 Minutes, Inches H_2O				
11. **Final Pressure After 5 Minutes, Inches H_2O**				
12. Allowable Final Pressure from Table 3-I				
13. Test Status [**Pass** or **Fail**]				

Test Conducted by:	Test Company Name _____ Address _____ City _____	Date and Time of Test:

Executive Order G-70-169

Exhibit 4

TEN GALLON PER MINUTE LIMITATION COMPLIANCE VERIFICATION PROCEDURE

Compliance with the 10 gallon per minute flowrate limitation shall be determined with the following methodology. It is recommended that the maximum dispensing rate through each nozzle/hose assembly be verified.

1) The facility uses identical models of hoses, nozzles, and breakaways:

Check the nozzle closest to the submersible turbine pump (STP) for each gas grade, or STP, at the facility. With no other dispensing occurring which uses the same STP, dispense gas into a vehicle or approved container. Dispensing shall be conducted in the "hand-held, wide-open" mode. Using a stopwatch accurate to at least 0.2 seconds, begin timing the dispensing rate after at least one gallon has been dispensed. This one gallon buffer is necessary due to the "slow-start" nature of some dispensers. Determine the time required to dispense 2, 3, 4, or 5 gallons of gasoline. The facility shall be deemed in compliance with the 10 gallon per minute limitations if the elapsed time meets, or exceeds, the times shown in Table 1. If the dispensing rate exceeds the allowable limit, a CARB-certified flow limiting device shall be installed.

2) The facility uses different models of hoses, nozzles, or breakaways

Due to potential differences in pressure drops through the various components, each of the nozzle/hose assemblies shall be tested for maximum dispensing rates. Using the same criteria as above, determine the maximum dispensing rate through each nozzle/hose assembly. If the maximum dispensing rate exceeds the 10 gpm limit, a CARB-certified flow limiting device shall be installed.

Table 1
Verification of 10 gpm

Product Dispensed, gallons	Minimum Allowable Time, seconds
2.0	11.8
3.0	17.7
4.0	23.6
5.0	29.5

Note: The times have been corrected to allow for the accuracy of the measurement.