State of California

AIR RESOURCES BOARD

Executive Order G-70-17

Relating to the Certification of the
Emco Wheaton Balance
Phase II Vapor Recovery System

Pursuant to the authority vested in the Air Resources Board (ARB) by Health and Safety Code Section 41954; and

Pursuant to the authority vested in the undersigned by Health and Safety Code Sections 39515 and 39516;

IT IS ORDERED AND RESOLVED: That the Emco Wheaton Balance, Phase II vapor collection and disposal system is hereby certified for attendant and/or self-serve use at gasoline service stations in conjunction with Phase I vapor recovery systems which have been certified by the Air Resources Board. Alternate piping arrangements for the system hereby certified are described in Exhibits 1 and 2 attached. A listing of certified system components is hereby presented in Exhibit 3 attached hereto.

IT IS FURTHER ORDERED AND RESOLVED: That compliance with the applicable certification requirements and rules and regulations of the Division of Measurement Standards, the State Fire Marshal's Office, and the Division of Industrial Safety of the Department of Industrial Relations is made a condition of this certification.

IT IS FURTHER ORDERED AND RESOLVED: That the system certified hereby shall perform in actual use with the same effectiveness as the certification test system. Compliance with the applicable performance criterion shall be a condition of this certification, and failure to meet this criterion shall constitute grounds for revocation, suspension, or modification of this certification.

IT IS FURTHER ORDERED AND RESOLVED: That any alteration to the equipment, parts, design, or operation of the system certified hereby, is prohibited, and deemed inconsistent with this certification, unless such alteration has been approved by the undersigned.

IT IS FURTHER ORDERED AND RESOLVED: That, prior to installation of the system at any station, the system shall be modified so as to not require the use of nozzle extenders and such modified system shall have been demonstrated to comply with applicable certification requirements to the satisfaction of the undersigned.

IT IS FURTHER ORDERED AND RESOLVED: That in the event that the Air Resources Board or the undersigned determines that the back pressure shut-off feature of the nozzle does not adequately detect and warn the system operator of liquid blockages, the system shall be modified within 30 days to incorporate a device to perform this function which is acceptable to the undersigned.

Executed at El Monte, California, this 17th day of April, 1978.

William H. Lewis, Jr.
Executive Officer

Exhibit 1

Executive Order G-70-17

Emco Wheaton Balance Phase II
Vapor Recovery System

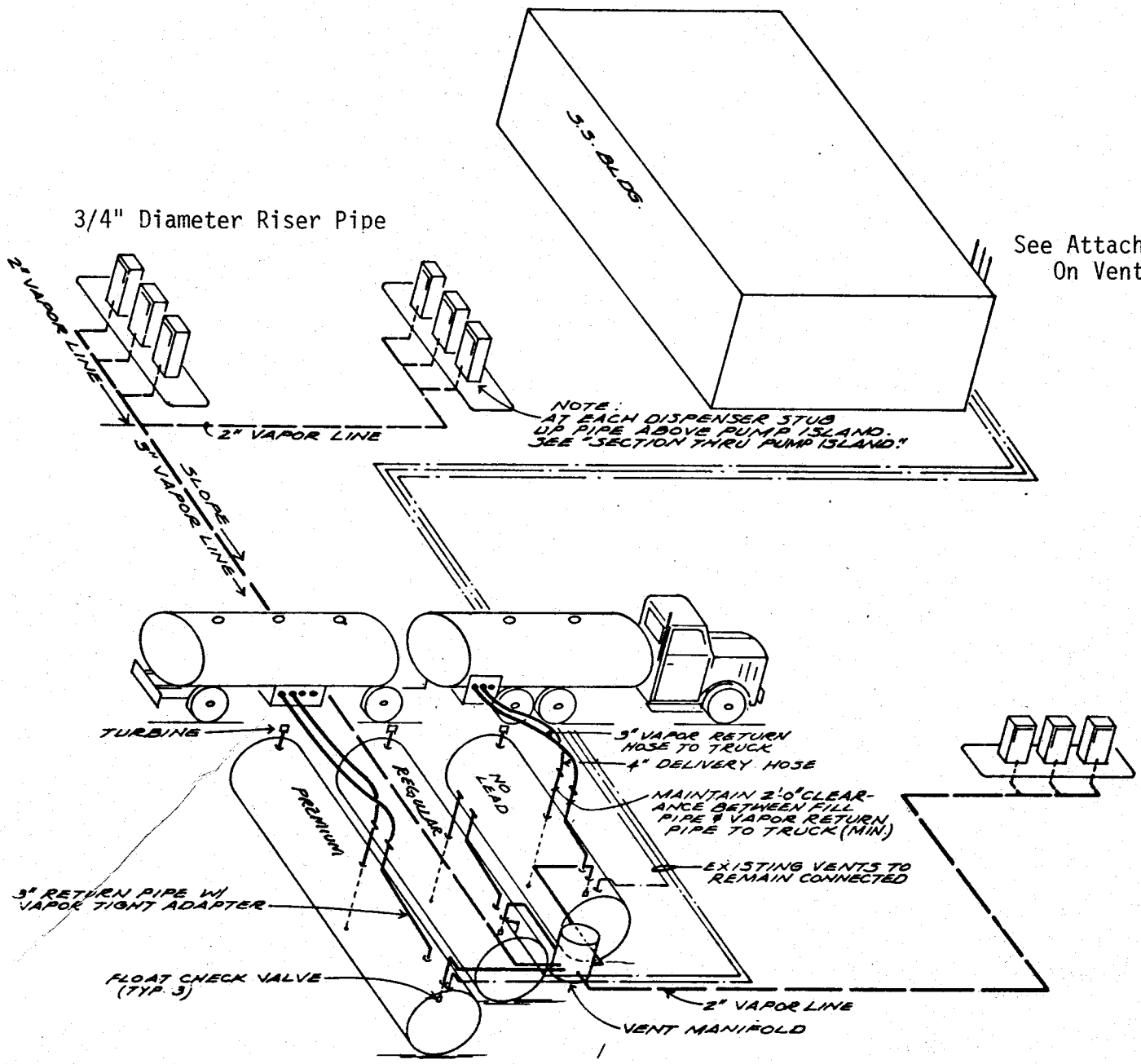

Exhibit 2

Executive Order G-70-17
Emco Wheaton Balance Phase II
Vapor Recovery System

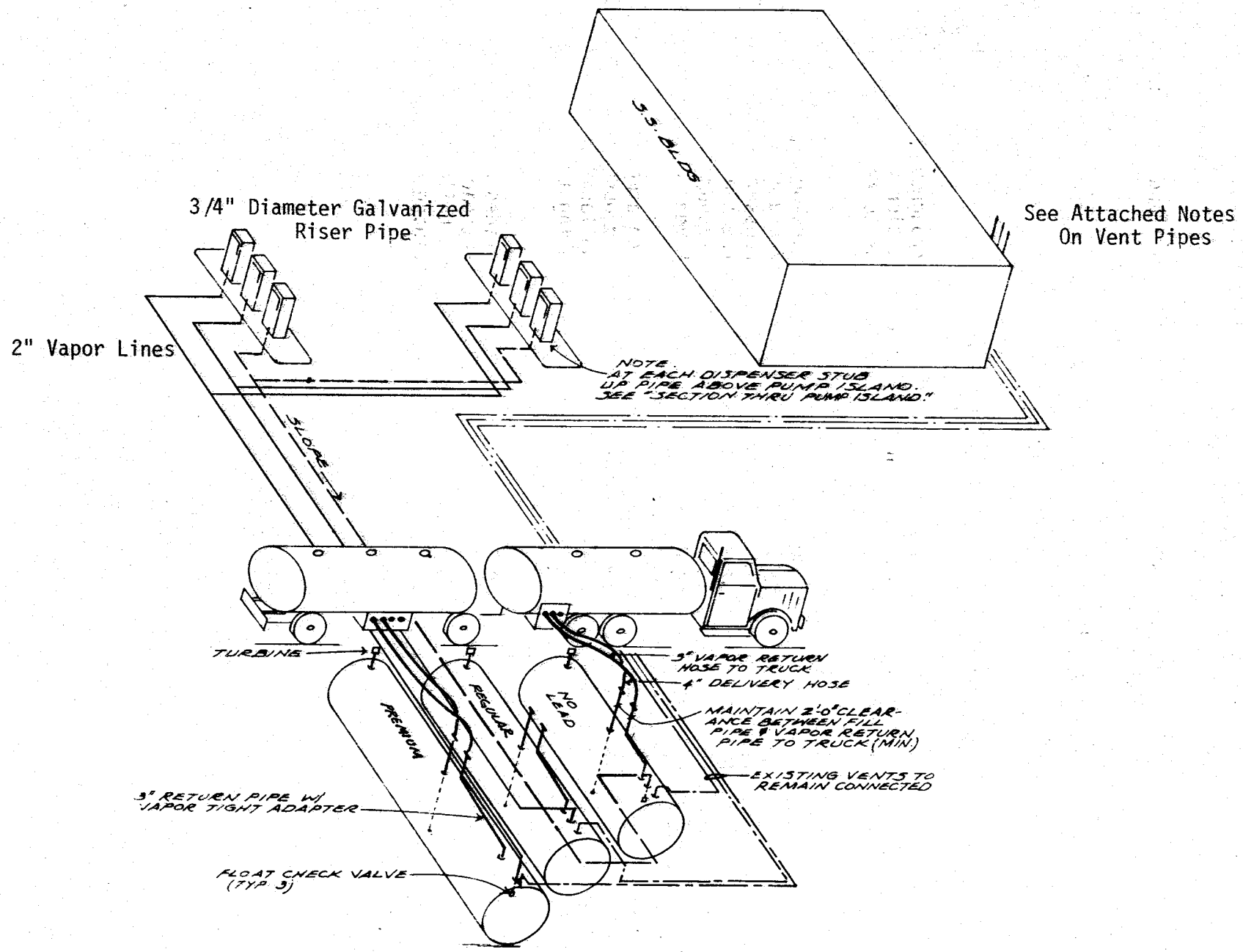

EXHIBIT 3

Executive Order G-70-17

Emco-Wheaton Phase II Balance

Vapor Recovery System

Component List

Item	Manufacturer and Model	State Fire Marshal Identification Number	Substitute Equipment	
			Manufacturer and Model	State Fire Marshal Identification Number
1. Nozzle	Emco Wheaton A3003 Vapor Recovery Nozzle			
2. Liquid Hose	5/8 inch ID by 13 feet		3/4 in. by 13 ft	
3. Vapor Hose	5/8 inch ID by 13 feet		3/4 in. by 13 ft	
4. Riser	3/4 inch diameter Galvanized Pipe			
5. Swivels a. Nozzle b. Island	OPW Single Plane OPW 36-E Double Plane 90			
6. Flow Limiter	Emco Wheaton A-10			
7. Recirculation Trap	Emco Wheaton A 008-001			

Pressure Drop Through the System
(Includes Nozzle, Vapor Hoses and Underground piping)

Flow (CFH)	Δ("H_2O)
20	0.10
60	0.40
100	0.96

Notes to Accompany Exhibits 1 and 2

1. Vent pipes shall be adequately supported throughout their length and when they are supporting weights in addition to their own, additional supports may be required - anchor to rear building wall.

2. Tank vent pipes two inches or less in nom. inside diameter shall not be obstructed by any device unless the tank and its associated piping & other equip. is protected to limit back pressure development to less than the max. working pressure of the tank, piping and other equip. by the inst'n of an appvd. pressure/vacuum vent, rupture disc or other venting devices inst'd in the tank vent pipes.

3. Tank vent pipes shall terminate into the open atmosphere and shall be not less than 12 feet above the adjacent ground level. The outlet shall vent upward or horizontally and located to eliminate the possibility of vapors accumulating or traveling to a source of ignition or entering adjacent buildings.

4. All vapor return & vent piping shall be provided with swing joints at the base of the riser to each dispensing unit, at each tank connection, & at base of the vent riser where it fastens to a building or other structure. When a swing joint is used in a riser containing a shear section the riser must be rigidly supported.