State of California
AIR RESOURCES BOARD

Executive Order G-70-17-AC

Modification of Certification
of the Emco Wheaton Balance Phase II
Vapor Recovery System

WHEREAS, the Air Resources Board (the "Board") has established, pursuant to Sections 39600, 39601 and 41954 of the Health and Safety Code, certification procedures for systems designed for the control of gasoline vapor emissions during motor vehicle fueling operations ("Phase II vapor recovery systems") in its "Certification Procedures for Gasoline Vapor Recovery Systems at Service Stations" as last amended December 4, 1981 (the "Certification Procedures"), incorporated by reference in Section 94001 of Title 17, California Code of Regulations;

WHEREAS, the Board has established, pursuant to Sections 39600, 39601 and 41954 of the Health and Safety Code, test procedures for determining the compliance of Phase II vapor recovery systems with emission standards in its "Test Procedures for Determining the Efficiency of Gasoline Vapor Recovery Systems at Service Stations" as last amended September 1, 1982 (the "Test Procedures"), incorporated by reference in Section 94000 of Title 17, California Code of Regulations;

WHEREAS, Emco Wheaton has requested certification of the Emco Wheaton Model A4011 and A4015 vapor recovery nozzles for use with Balance type Phase II vapor recovery systems;

WHEREAS, I find that the Emco Wheaton Model A4011 and Model A4015 vapor recovery nozzles, when used with balance Phase II vapor recovery systems at new and existing installations, conform with all the requirements set forth in Sections I through VII of the Certification Procedures, and result in vapor recovery systems that are at least 95 percent effective for attendant and/or self-serve use at gasoline service stations when used in conjuction with Phase I vapor recovery systems that have been certified by the Board; and

WHEREAS, I find that coaxial vapor recovery hoses when used with balance Phase II vapor recovery systems result in an improvement to the performance of the systems; and

WHEREAS, Section VIII-A of the Certification Procedures provides that the Executive Officer shall issue an order of certification if he or she determines that the vapor recovery system conforms to all of the requirements set forth in Sections I through VII of the Certification Procedures.

NOW THEREFORE, IT IS HEREBY ORDERED that the certification, Executive Order G-70-17-AB, issued February 20, 1986, is hereby modified to add the Emco

Wheaton Model A4011 and Model A4015 coaxial vapor recovery nozzles for use with Balance Phase II vapor recovery systems. The Emco Wheaton vapor recovery nozzles and remote vapor check valves certified hereby are listed in Attachment A of this Order.

IT IS FURTHER ORDERED that remote vapor check valves, such as the Emco Wheaton A200-series vapor check valves listed in Attachment A of this Order, shall be used with the Emco Wheaton Model A4000, RA4000, A4001, RA4001 and A4011 vapor recovery nozzles. Remote vapor check valves must be installed in accordance with the latest revision of Executive Order G-70-52.

IT IS FURTHER ORDERED that the modified system is certified to be at least 95 percent effective in the self-serve and/or attendant use at gasoline service stations when used with a Board-certified Phase I vapor recovery system. Typical piping arrangements for this system may be found in Exhibits 1 and 2. A list of the certified Phase II Balance systems can be found in Exhibit 1 of the latest revision of Executive Order G-70-52. The Phase II system components and configurations shall be installed as specified in the latest revision of Executive Order G-70-52.

IT IS FURTHER ORDERED where balance type vapor recovery nozzles are to be installed at a new installation only the coaxial balance type vapor recovery nozzles and coaxial hose configurations may be used. For existing balance dual-hose systems, the coaxial nozzles may be used with a certified adaptor.

IT IS FURTHER ORDERED that the maximum dispensing rate shall be ten gallons per minute unless otherwise specified in the latest revision of Executive Order G-70-52.

IT IS FURTHER ORDERED that Emco Wheaton vapor recovery nozzles certified hereby must be capable of fueling, without the use of nozzle spout extenders, any motor vehicle that may be fueled at service stations not equipped with vapor recovery systems.

IT IS FURTHER ORDERED that compliance with the certification requirements and rules and regulations of the Division of Measurement Standards of the Department of Food and Agriculture, the State Fire Marshal's Office, and the Division of Occupational Safety and Health of the Department of Industrial Relations is made a condition of this certification.

IT IS FURTHER ORDERED that the nozzles certified hereby shall perform in actual use with the same effectiveness as the certification test nozzles. Compliance with this performance criterion shall be a condition of this certification, and failure to meet this criterion shall constitute grounds for revocation, suspension or modification of this certification.

IT IS FURTHER ORDERED that any alteration of the equipment, parts, design, or operation of the nozzles certified hereby, is prohibited, and deemed inconsistent with this certification, unless such alteration has been approved by the Executive Officer or his/her designee.

Certification Executive Order G-70-17-AC

IT IS FURTHER ORDERED that the certified Phase II vapor recovery nozzles shall, at a minimum, be operated in accordance with the manufacturer's recommended maintenance intervals and shall use the manufacturer's recommended operation, installation, and maintenance procedures.

IT IS FURTHER ORDERED that the certified Emco Wheaton vapor recovery nozzles shall be 100 percent performance checked at the factory including checks of proper functioning of all automatic shut-off mechanisms.

Executed at Sacramento, California this 6 day of March, 1992.

James D. Boyd
Executive Officer

Attachments

Executive Order G-70-17-AC
Attachment A

Emco Wheaton Balance Vapor Recovery Nozzles

A3003, RA3003		Dual port nozzle (contains vapor check valve)
A3005, RA3005		Coaxial nozzle (contains vapor check valve)
A4000, RA4000	*	Dual port nozzle (no vapor check valve)
A4001, RA4001	*	Coaxial nozzle (no vapor check valve)
A4005, RA4005		Coaxial nozzle (contains vapor check valve)
A4011	*	Coaxial short spout nozzle (no vapor check valve)
A4015		Coaxial short spout nozzle (contains vapor check valve)

* Remote vapor check valve required.

Emco Wheaton Remote Vapor Check Valves

A225	Dual inlet, dual outlet, island installation
A225-003	Dual inlet, dual outlet, island installation (single plane)
A226	Dual inlet, coaxial outlet, island installation
A227	Dual inlet, coaxial outlet, high hose dispenser installation
A228	Coaxial inlet, coaxial outlet

Exhibit 1

Executive Order G-70-17-AC

Emco Wheaton Balance Phase II
Vapor Recovery System

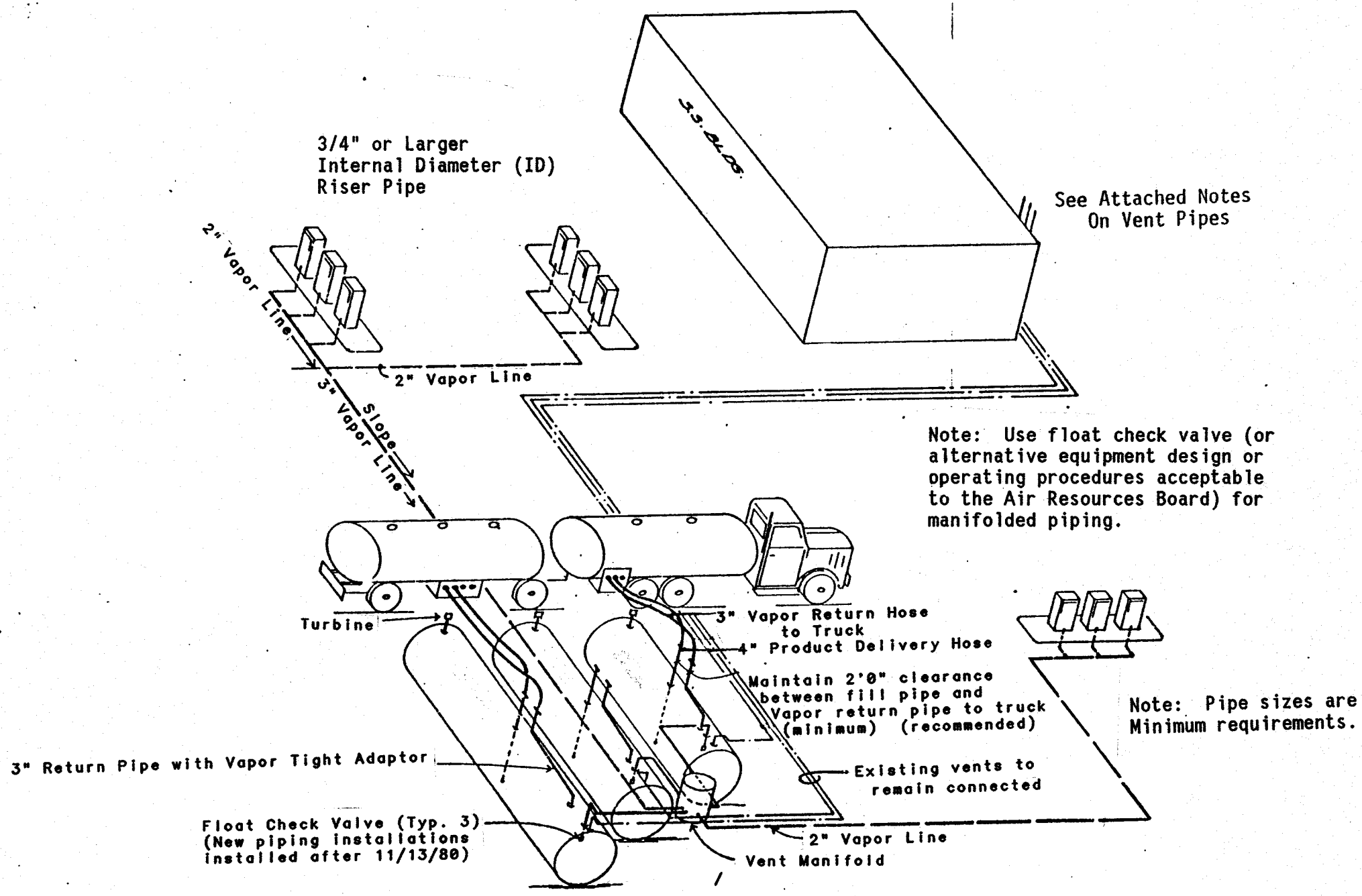

Exhibit 2

Executive Order G-70-17-AC

Emco Wheaton Balance Phase II
Vapor Recovery System

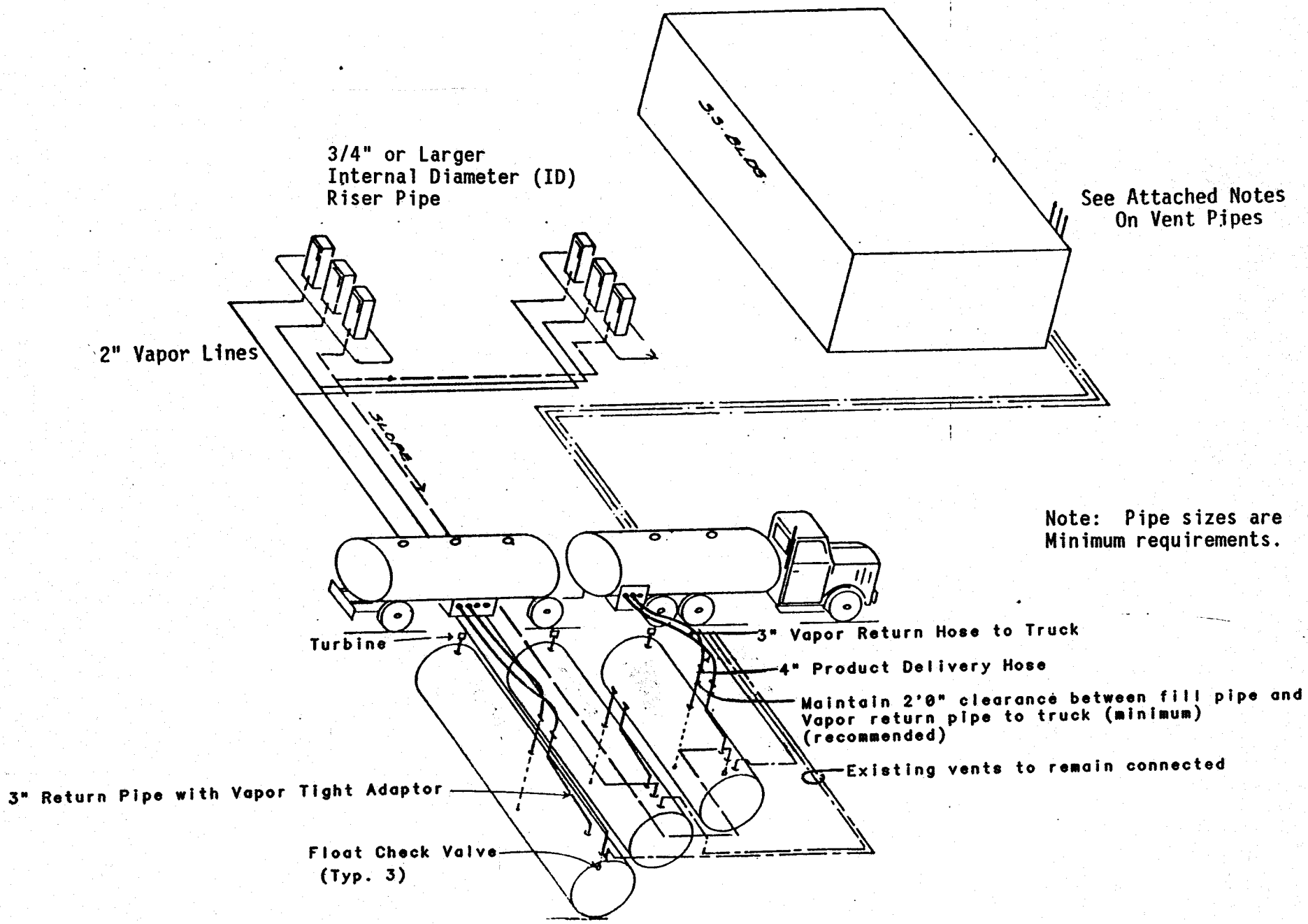

Executive Order G-70-17-AC
Notes to Accompany Exhibit 1

1. For non-retail outlets which fuel special vehicles, the installation of vapor recovery hoses longer than specified in the latest version of Executive Order G-70-52 are allowed if the following conditions are met:

   a. The non-retail outlet fuels special vehicles such as large trucks, large skip loaders, off-the-road equipment, etc., where reaching the fill pipe requires longer hoses.

   b. The vapor return hoses are arranged to be self-draining or provisions are made to drain the hoses after each refueling or the system incorporates an approved liquid blockage detection arranged to cease dispensing when a blockage occurs.

   c. The Executive Officer of the Air Resources Board or his/her designee has approved the plans for compliance with condition b.

2. The maximum allowable pressure drop through a system including nozzle, vapor hose, swivels, and underground piping is:

   a. 0.15 inch water at a flow of 20 CFH;
   b. 0.45 inch water at a flow of 60 CFH;
   c. 0.95 inch water at a flow of 100 CFH;

   The poppeted vapor connection to the underground storage tank must be open during the pressure drop test.

3. The vent pipes and vent manifold shall be adequately supported throughout their length and, when they are supporting weights in addition to their own, additional supports may be required such as anchoring to a building or other structure.

4. All vapor return and vent piping shall be equipped with swing joints at the base of the riser to each dispensing unit, at each tank connection and at the base of the vent riser where it fastens to a building or other structure. When a swing joint is used in a riser containing a shear section, the riser must be rigidly supported.

5. Float check valves (or alternative equipment, design, or operating procedures acceptable to the Air Resources Board) are required for all underground manifolded piping systems installed on or after November 13, 1980, to prevent contamination of unleaded gasoline with leaded gasoline, via vapor recovery piping, during underground storage tank loading or overfill.