State of California

AIR RESOURCES BOARD

Executive Order G-70-17-B

Relating to the Modification of the Certification of the
Emco Wheaton Balance
Phase II Vapor Recovery System

Pursuant to the authority vested in the Air Resources Board (ARB) by Health and Safety Code Section 41954; and

Pursuant to the authority vested in the undersigned by Health and Safety Code Sections 39515 and 39516;

IT IS ORDERED AND RESOLVED: That the certification issued on August 2, 1978, for the Emco Wheaton Balance Phase II vapor collection and disposal system is hereby modified to eliminate previously listed restrictions on vapor hose swivels and to allow installation of any swivels that have State Fire Marshal approval and have a minimum inside diameter of 0.495 inches, provided that the swivel arrangement chosen prevents kinking of the vapor hose. The certification is further modified to change the nozzle to a modified one incorporating a larger diaphram, to allow adjusting the length of each vapor return hose according to dispenser island width, to require selection of product hose length to provide for full extension of the vapor return hose, to allow use of alternate recirculation traps and associated plumbing configurations, to allow the use of larger diameter underground piping, and to eliminate the restriction on product hose diameter since product flow is limited by the flow limiter. The system hereby modified is certified to be at least 90% effective in self-serve use and at least 95% effective in attendant use at service stations in conjunction with Phase I vapor recovery systems which have been certified by the Air Resources Board. The system is described in Exhibits 1, 2, and 3 attached hereto.

IT IS FURTHER ORDERED AND RESOLVED: That compliance with the applicable certification requirements and rules and regulations of the Division of Measurement Standards, the State Fire Marshal's Office and the Division of Industrial Safety of the Department of Industrial Relations is made a condition of this certification.

IT IS FURTHER ORDERED AND RESOLVED: That the system certified hereby shall perform in actual use with the same effectiveness as the certification test system. Compliance with the applicable performance criterion shall be a condition of this certification, and failure to meet this criterion shall constitute grounds for revocation, suspension, or modification of this certification.

IT IS FURTHER ORDERED AND RESOLVED: That any alteration to the equipment, parts, design, or operation of the system certified hereby, is prohibited, and deemed inconsistent with this certification, unless such alteration has been approved by the undersigned.

IT IS FURTHER ORDERED AND RESOLVED: That in order for vapor return hoses longer than specified in this certification to be used the system shall incorporate a liquid blockage detector which is acceptable to the undersigned.

Executed at Sacramento, California, this 6th day of December, 1978.

Thomas C Austin

Thomas C. Austin
Executive Officer

Exhibit 1

Executive Order G-70-17-*B*

Emco Wheaton Balance Phase II
Vapor Recovery System

See Attached Notes ~~on~~ *for*
~~Location of Vapor Hose~~
Dispenser Components
3/4" Diameter *or larger* Riser Pipe

See Attached Notes
On Vent Pipes

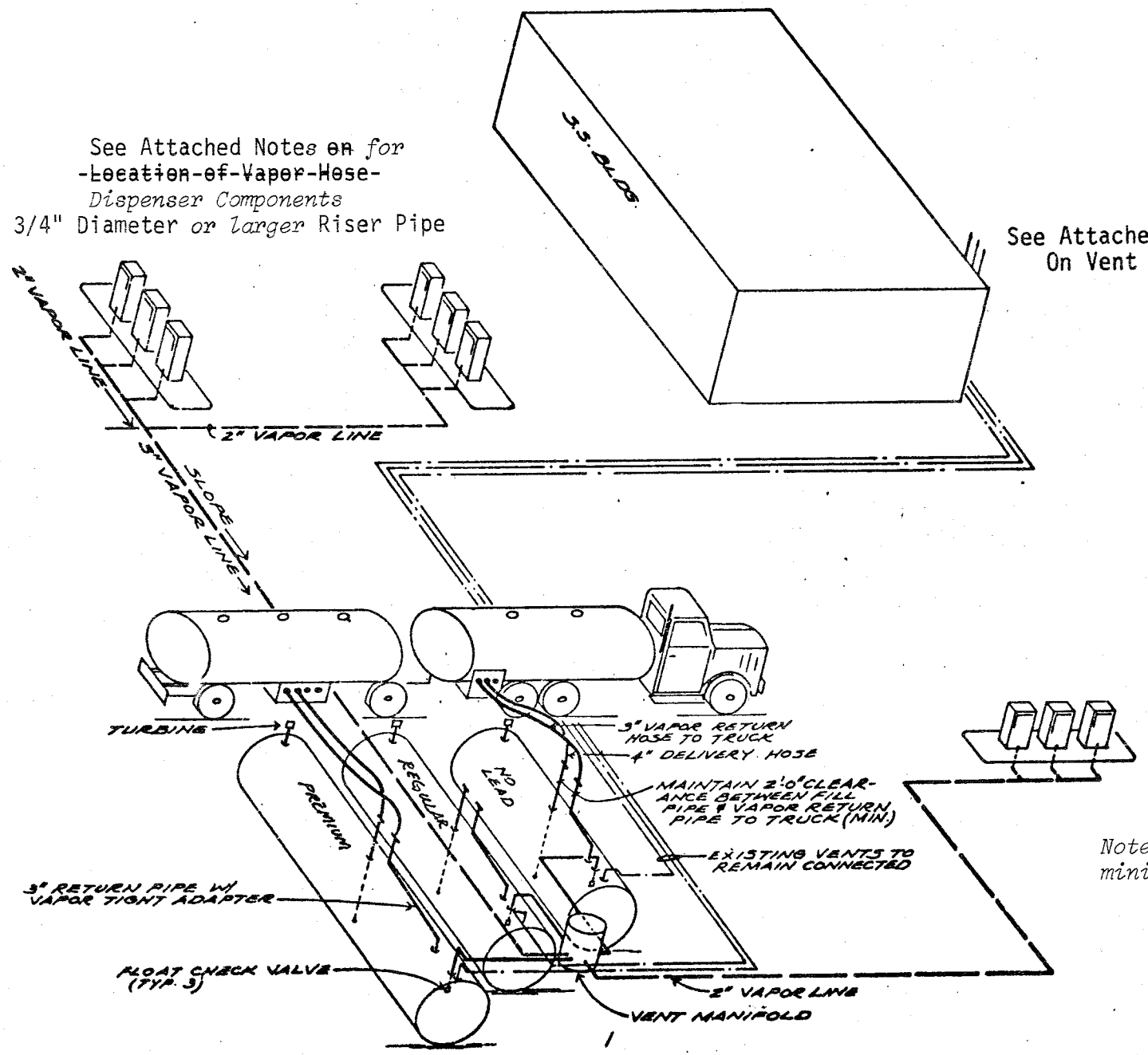

Note: pipe sizes are minimum requirements

Exhibit 2

Executive Order G-70-17-*B*
Emco Wheaton Balance Phase II
Vapor Recovery System

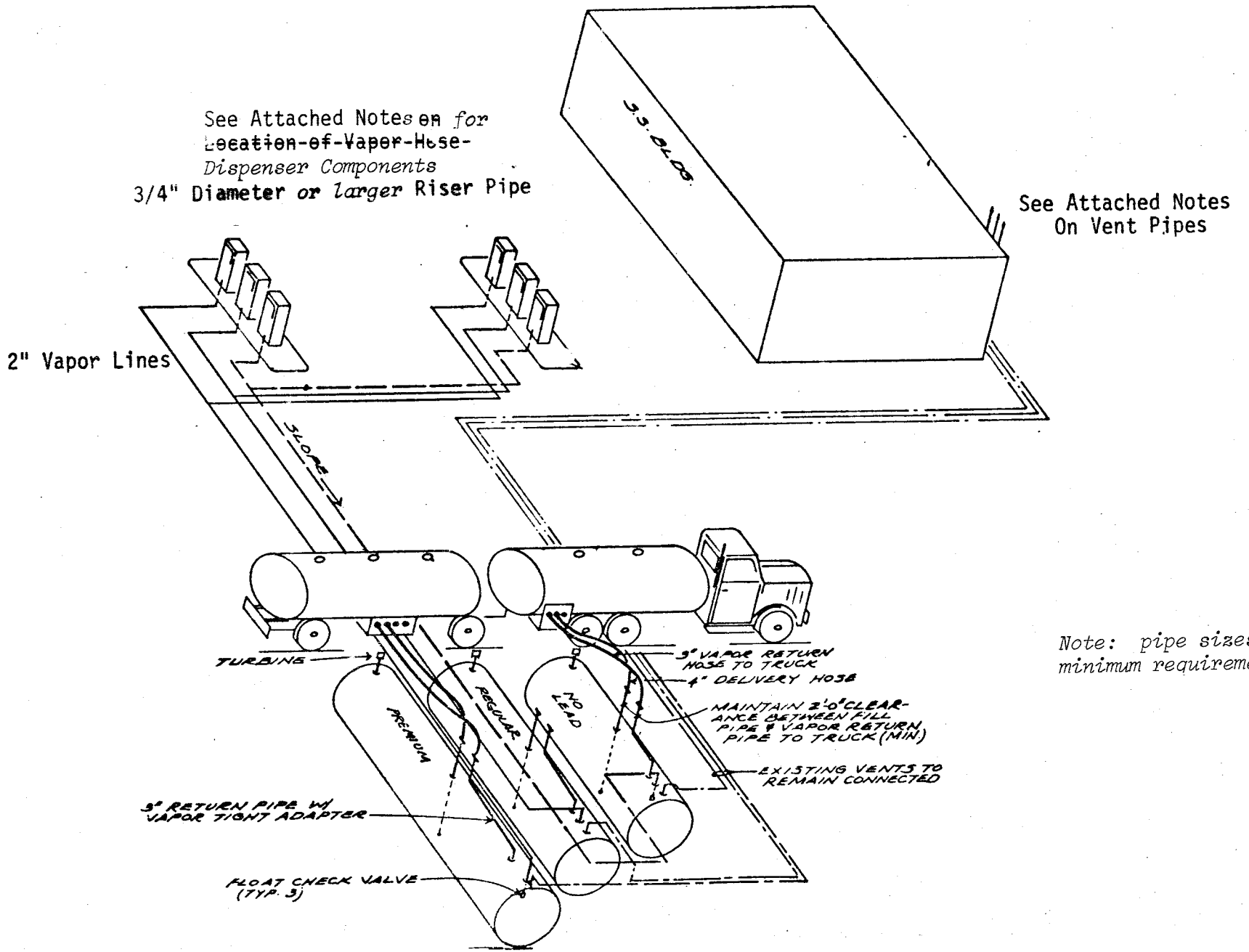

Note: pipe sizes are minimum requirements.

EXHIBIT 3

Executive Order G-70-17-*B*

Emco Wheaton Phase II Balance

Vapor Recovery System

Component List

Item	Manufacturer and Model	State Fire Marshal Identification Number	Substitute Equipment: Manufacturer and Model	Substitute Equipment: State Fire Marshal Identification Number
1. Nozzle	Emco Wheaton A3003 (Extended Spout, *Large Diaphram*) Vapor Recovery Nozzle *(unleaded)* *Emco Wheaton A3003 (Short Spout, Large Diaphram) Vapor Recovery Nozzle (leaded)*	GVRC 001:007:25		
~~2. Liquid Hose~~	~~5/8 in. ID by 9 feet~~		~~3/4 in. by 9 ft.~~	
2. Vapor Hose	5/8 in. ID by 8 feet		3/4 in. ID by 8 ft.	
3. Riser	3/4 in. *or larger* diameter Galvanized Pipe			
4. Swivels				
a. Nozzle	~~Single Plane OPW-43~~ *State Fire Marshal Approved. 0.495 in. ID minimum*	~~GVRC 005:008:6~~		
b. Island	~~Double Plane 90 OPW-36-E~~ *State Fire Marshal Approved. 0.495 in. ID minimum*	~~GVRC 005:008:8~~		
5. Flow Limiter	Emco Wheaton A-10	GVRC 001:007:1		
6. Recirculation Trap	Emco Wheaton A008-001	GVRC 001:007:4	*OPW 78, 78-S, 78-E, or 78-ES*	*GVRC 001:008:13*

Pressure Drop Through the System
(Includes Nozzle, Vapor Hoses and Underground Piping)

Flow (CFH)	Δ("H_2O)
20	0.10
60	0.40
100	0.96

Notes to Accompany Exhibits 1, 2 and 3

1. Vent pipes shall be adequately supported throughout their length and when they are supporting weights in addition to their own, additional supports may be required - anchor to ~~rear~~ building ~~wall.~~ *or other structure.*

2. Tank vent pipes two inches or less in nom. inside diameter shall not be obstructed by any device unless the tank and its associated piping & other equipment is protected to limit back pressure development to less than the maximum working pressure of the tank, piping and other equipment by the installation of an approved pressure/vacuum vent, rupture disc or other venting devices installed in the tank vent pipes.

3. Tank vent pipes shall terminate into the open atmosphere and shall be not less than 12 feet above the adjacent ground level. The outlet shall vent upward or horizontally and located to eliminate the possiblity of vapors accumulating or traveling to a source of ignition or entering adjacent buildings.

4. All vapor return and vent piping shall be provided with swing joints at the base of the riser to each dispensing unit, at each tank connection, and at the base of the vent riser where it fastens to a building or other structure. When a swing joint is used in a riser containing a shear section the riser must be rigidly supported.

5. Each vapor hose shall be located such that the center line of the hose fitting, at the recirculation trap *(if externally mounted) or at the dispenser cabinet swivel mounting (if trap is internally mounted)*, is not more than 3-1/2 inches above the top surface of the island and is as close as possible to the top surface of the island.

6. *For dispenser islands greater than 5 feet in width, each vapor hose length shall not be longer than the sum of one-half the dispenser island width, in feet, plus 6 feet.*

7. *State Fire Marshal approved swivels (and offsets if necessary) for this system shall be selected and installed on hoses to prevent hose kinking.*

8. *Product hoses one foot or more longer than the vapor hose shall be installed at each dispenser to provide for full extension of the vapor return hose.*

9. *If any OPW 78 series recirculation trap is internally mounted in any dispenser, the top of the recirculation trap shall not be higher than the top surface of the dispenser island and a vapor recovery piping shear section which meets State Fire Marshal requirements shall be installed.*

10. *On dual dispensers dispensing the same product from both sides, the vapor return lines may be connected to a single OPW 78 series recirculation trap mounted internally in the dispenser.*