State of California

AIR RESOURCES BOARD
Executive Order G-70-18-C

Relating to the Modification of the Certification of the
Shell Model 75B1 and 75B1-R3
Service Station Phase II Vapor Recovery Systems

Pursuant to the authority vested in the Air Resources Board (ARB) by Health and Safety Code Section 41954; and

Pursuant to the authority vested in the undersigned by Health and Safety Code Sections 39515 and 39516;

IT IS ORDERED AND RESOLVED: That the certification Executive Order G-70-18-B issued on June 11, 1979 for the Shell Model 75B1 and 75B1-R3 service station Phase II vapor collection and disposal systems is hereby modified:

1. to include the OPW-7VF as an alternate nozzle, and

2. to include an alternate flame arrestor location, on the manifolded vapor return line.

The systems hereby modified are certified to be at least 95 percent effective in attendant and/or self-service use at service stations in conjunction with Phase I vapor recovery systems which have been certified by the Air Resources Board. The systems are described in Exhibits 1, 2, 3, and 4 attached hereto.

IT IS FURTHER ORDERED AND RESOLVED: That the use of the Shell Model 75B1 and 75B1-R3 systems are limited to facilities for which Shell Oil Company is financially responsible with respect to any claims or assertions.

IT IS FURTHER ORDERED AND RESOLVED: That compliance with the applicable certification requirements and rules and regulations of the Division of Measurement Standards, the State Fire Marshal's Office, and the Division of Industrial Safety of the Department of Industrial Relations is made a condition of this certification.

IT IS FURTHER ORDERED AND RESOLVED: That the systems certified hereby shall perform in actual use with the same effectiveness as the certification test system. Compliance with the applicable performance criterion shall be a condition of this certification, and failure to meet this criterion shall constitute grounds for revocation, suspension, or modification of this certification.

IT IS FURTHER ORDERED AND RESOLVED: That any alteration to the equipment, parts, design, or operation of the system certified hereby, is prohibited, and deemed inconsistent with this certification, unless such alteration has been approved

by the undersigned.

Executed at Sacramento, California this 28th day of August, 1979.

Thomas C. Austin
Executive Officer

EXHIBIT 1

EXECUTIVE ORDER G - 70 - 18 - C

SHELL MODEL 75B1

SERVICE STATION PHASE II VAPOR RECOVERY SYSTEM

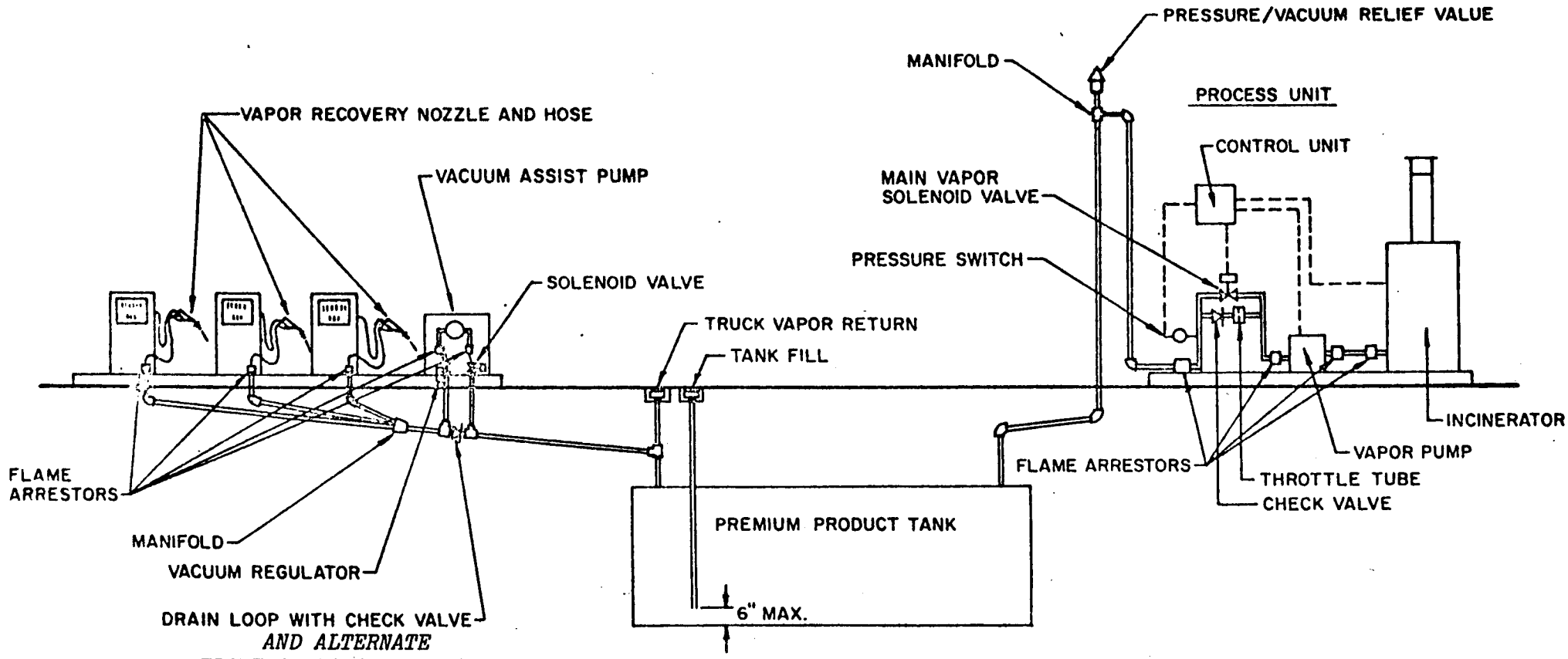

NOTE: SWING JOINTS OR FLEXIBLE CONNECTORS (NOT SHOWN) REQUIRED FOR ALL GALVANIZED IRON PIPING.
SEE EXHIBIT 2 FOR COMPONENT LIST BY MANUFACTURER, MODEL, AND STATE FIRE MARSHAL INDENTIFICATION NUMBER.
GASOLINE FLOW REGULATOR OPTIONAL WITH OPW-7VF NOZZLES.

EXHIBIT 2

Executive Order G-70-18- C

Shell Model 7581

Service Station Phase II Vapor Recovery System

Component List

Item	Manufacturer and Model	State Fire Marshal Identification Number	Substitute Equipment	
			Manufacturer and Model	State Fire Marshal Identification Number
1. Nozzle	Emco-Wheaton Model A-3004 (leaded)	GVRC-004:007:3	OPW-7VF-22 (leaded) OPW-7VF-24 (leaded)	GVRC 004:008:21 GVRC 004:008:23
	Emco-Wheaton Model A-3004 (unleaded) Extended Spout		OPW-7VF-47 (unleaded) OPW-7VF-49 (unleaded)	GVRC 004:008:20 GVRC 004:008:22
2. Gasoline Flow Regulator	Emco-Wheaton Model A-10	GVRC-001:007:1		
3. Vapor Hose	UL-listed gasoline delivery hose	GVRC-004:009:1		
4. Flame Arrestor	G.W. Lisk #4654	GVRC-004:009:2		
5. Flame Arrestor	G.W. Lisk #4620	GVRC-004:009:3		
6. Vacuum Assist Blower	Rotron D313 w/ UL-listed Cl 1GpD Motor of Random Mfg.	GVRC-004:009:4		
7. Pressure Regulator	Maxitrol RV53 per ES200 diaphragm	GVRC-004:009:5		
8. Vacuum Assist Solenoid	ITT-General Controls S241XA02V31127	GVRC-004:009:6		
9. Drain Loop Check Valve	Powell #578	GVRC-004:009:18		
10. Pressure/Vacuum Valve	Varec Fig 2010-811	GVRC-005:006:1		
11. Process Unit w/parts items:	Shell 7581			
a. Flame Arrestors	Lisk #4654	GVRC-004:009:16		
b. Fuel Pump	Gast #0740-P15	GVRC-004:009:7		
c. Filters	Gast #AB608	GVRC-004:009:17		
d. Burner	Maxon #AL4S	GVRC-004:009:8		
e. Flame Support Blower & Motor	Cincinnati Fan LMBC w/UL-listed TEFC motor	GVRC-004:009:9		
f. Sail Switch	Honeywell #S43A1003	GVRC-004:009:10		
g. Flame Sensor	Honeywell #C7027A-1049	GVRC-004:009:11		
h. Spark Generator	Honeywell #Q624A 1014	GVRC-004:009:12		
i. Main fuel solenoid	ITT-General Control S 251XAQ2L3EG5	GVRC-004:009:13		
j. Pressure Switch Cluster	Shell PSC1 (1)	GVRC-004:009:14		
k. Control Panel	Shell CP1 (2)	GVRC-004:009:15		
(1) Shell PSC1 Includes:		GVRC-004:009:14		
a. Pressure Switch	Dwyer #1951-1EP			
b. "	Dwyer #1951-00-EP			
c. Pressure Gauge	Dwyer #2010-0 to 10"			
(2) Shell CP1 Includes:		GVRC-004:009:15		
a. Circuit Breaker CB1	Woods Electric #124-205-101			
b. " CB2	Woods Electric #122-210-101			
c. " CB3	Woods Electric #122-215-101			
d. Relay K1 & K2	Potter Brumfield #PR7AY0			
e. Relay K3	Magnecraft #W588-AX8			
f. Control Relay A1	Honeywell R4795A 1016			
g. Housing	Hoffman [illegible]			

Exhibit 3

Executive Order G-70-18-*C*

Shell Model 75B1-R3
Service Station Phase II Vapor Recovery System

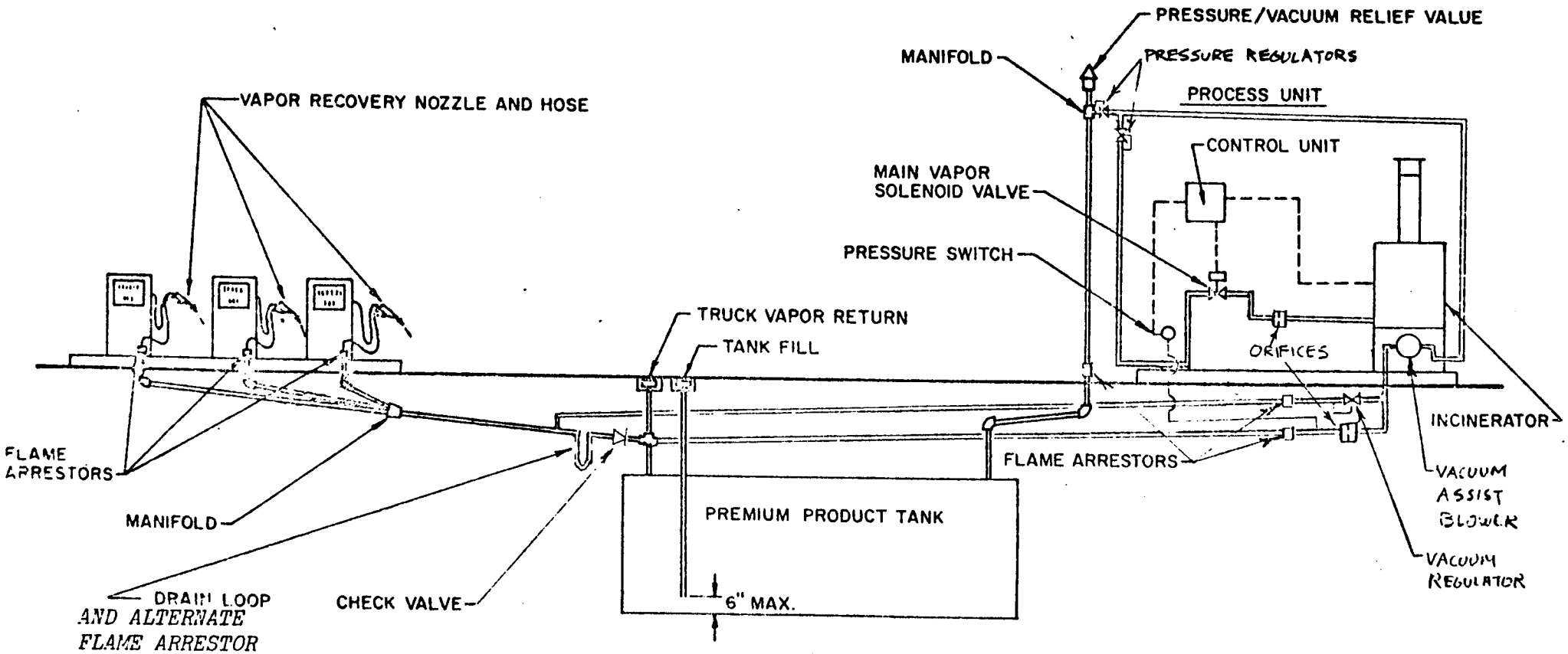

NOTE: SWING JOINTS OR FLEXIBLE CONNECTORS (NOT SHOWN) REQUIRED FOR ALL GALVANIZED IRON PIPING.
SEE EXHIBIT 4 FOR COMPONENT LIST BY MANUFACTURER, MODEL, AND STATE FIRE MARSHAL INDENTIFICATION NUMBER.

Vapor manifold between premium and regular tanks may be used in lieu of manifolding both premium and regular tank vent pipes to pressure/vacuum relief valve.
Gasoline flow regulator optional with OPW-7VF nozzles.

Exhibit 4

Executive Order G-70-18-*C*
Shell Model 75B1-R3
Service Station Phase II Vapor Recovery System
Component List

Item	Manufacturer and Model	State Fire Marshal Identification Number	Substitute Equipment: Manufacturer and Model	Substitute Equipment: State Fire Marshal Identification Number
Nozzle	Emco Wheaton Model A-3004 (leaded)	GVRC 004:007:3	*OPW-7VF-22 (leaded)* *OPW-7VF-24 (leaded)*	*GVRC 004:008:21* *GVRC 004:008:23*
	Emco Wheaton Model A-3004 (unleaded) Extended Spout		*OPW-7VF-47 (unleaded)* *OPW-7VF-49 (unleaded)*	*GVRC 004:008:20* *GVRC 004:008:22*
Flow Regulator	Emco Wheaton A-10	GVRC 001:007:1		
Vapor Hose	U.L. listed product hose	---		
Flame Arrester (in Drain Loop)	G.W. Lisk #4654	GVRC 004:009:2		
Pressure/Vacuum Relief Valve	Varec 2010-811	GVRC 005:006:1		
Processing Unit	Shell 75 B1-R3	GVRC 004:009:1		