Executive Order G-70-191

Exhibit 2

Figure 2B-2
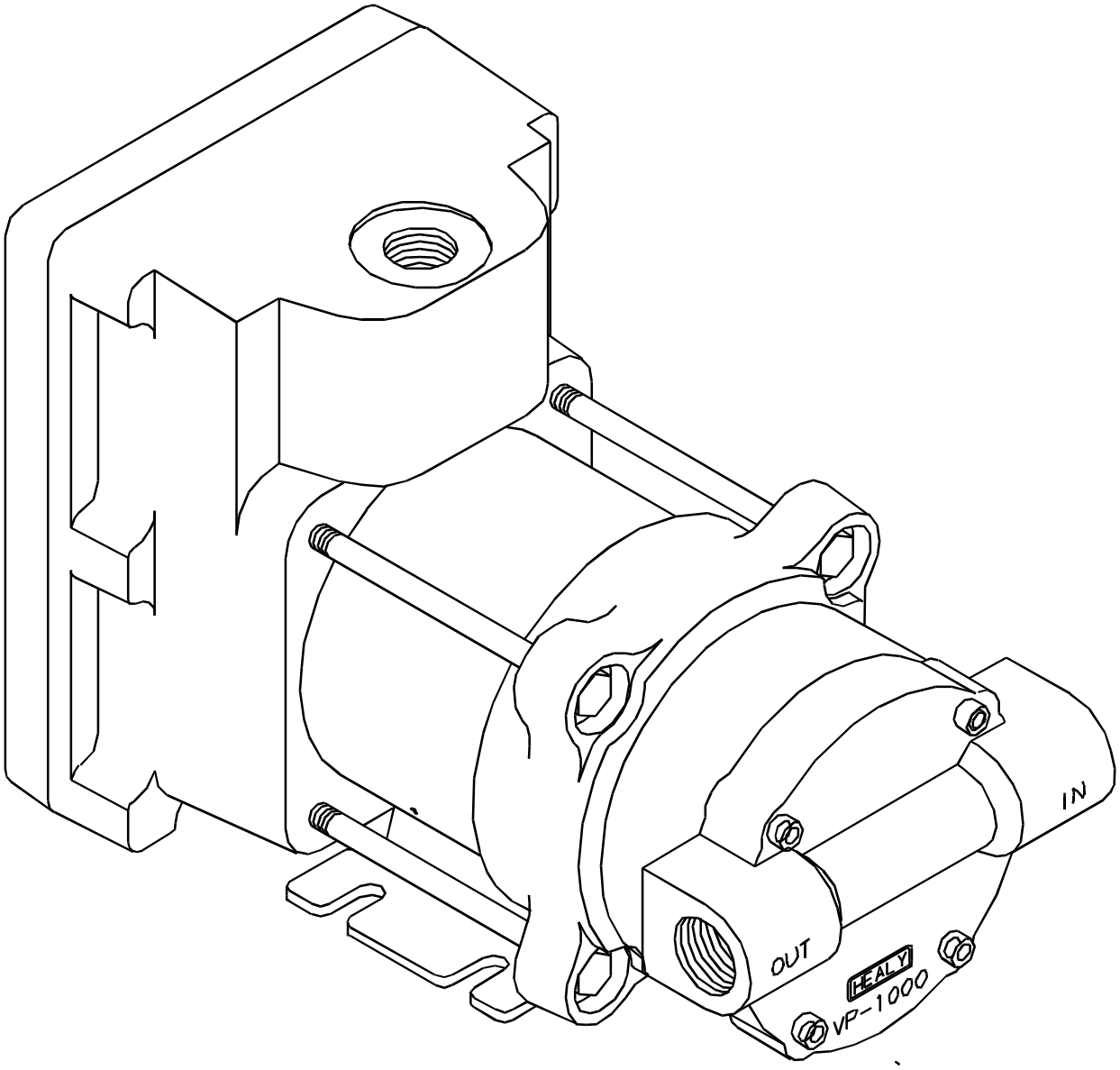
Healy/Franklin Electric
VP-1000 Vapor Pump