State of California

AIR RESOURCES BOARD

EXECUTIVE ORDER G-70-2-D

Related to the Modification of the Certification of the OPW System A, Type 5, Vapor Recovery System for Underground Storage Tanks at Gasoline Service Stations

Pursuant to the authority vested in the Air Resources Board by Health and Safety Code Section 41954; and

Pursuant to the authority vested in the undersigned by Health and Safety Code Sections 39515 and 39516.

IT IS ORDERED AND RESOLVED: That, except as provided below, the certification of the Dover Corporation, OPW Division, System A, Type 5, vapor recovery system as shown in Exhibit 1, is hereby modified to allow the use of the additional interchangeable parts noted in Exhibit 2 attached hereto.

IT IS FURTHER ORDERED AND RESOLVED: That the use of pressure-vacuum valve shall require the prior approval of the local fire chief, and that the tanks and piping shall comply with the appropriate General Industry Safety Orders and in particular the provisions in Articles 144, 145, and 146 thereof.

IT IS FURTHER ORDERED AND RESOLVED: That compliance with the applicable certification requirements and rules and regulations of the Division of Measurement Standards, the State Fire Marshal's Office, and the Division of Industrial Safety is made a condition of this certification.

IT IS FURTHER ORDERED AND RESOLVED: That, any underground storage tank equipped with this system and filled by a gasoline delivery tank equipped with pressure-differential activated vapor-return vent valves must have a pressure-vacuum relief valve on the vent of the underground storage tank;

IT IS FURTHER ORDERED AND RESOLVED: That the system certified hereby shall perform in actual use with the same effectiveness as the certification test system. Compliance with this performance criterion shall be a condition of this certification, and if not met, shall constitute grounds for revocation, suspension or modification of this certification.

IT IS FURTHER ORDERED AND RESOLVED: That any alteration in the equipment parts, design, or operation of the system certified hereby is prohibited and deemed inconsistent with this certification unless the alteration has been approved by the undersigned.

Executed at Sacramento, California this 1st day of December 1977.

William H. Lewis, Jr.
Executive Officer

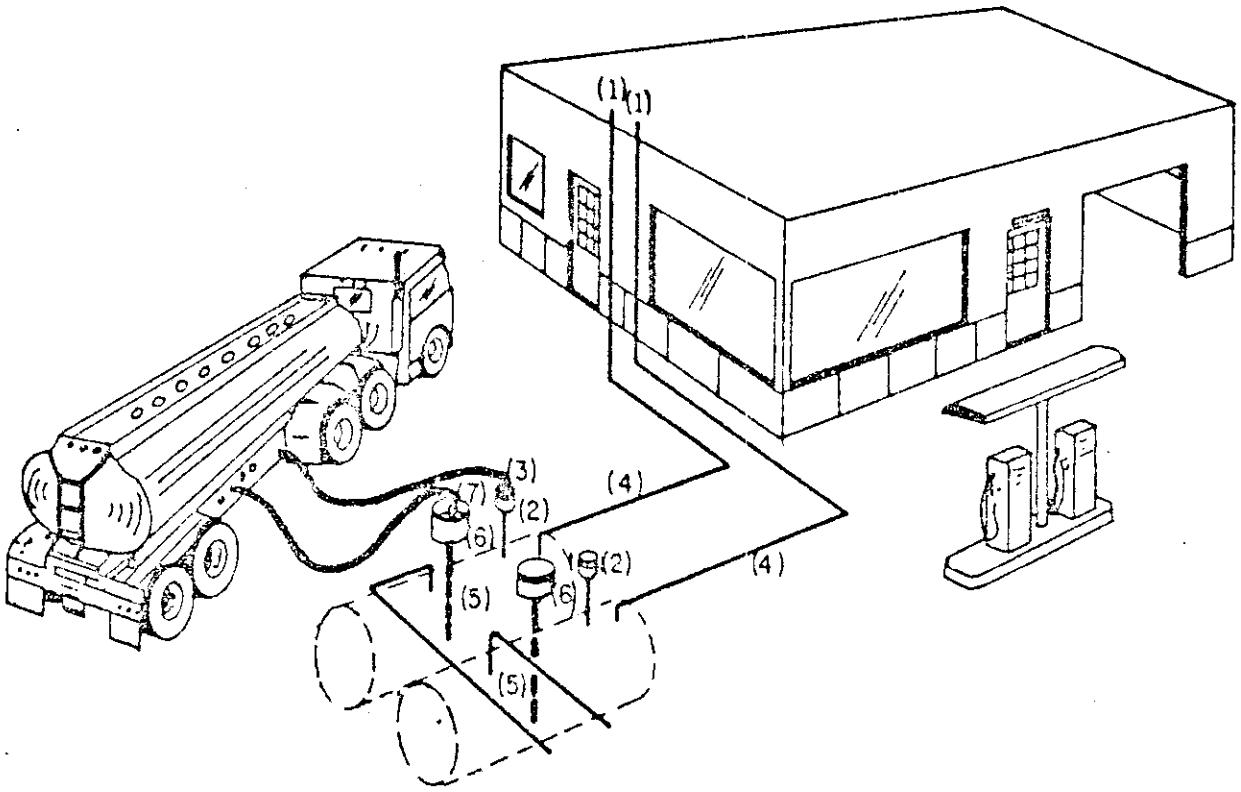

PARTS LIST

(1) VAREC 2010-811 P/V Valve (Optional)

(2) OPW 1611-AV3" Dry break with an OPW 1711T or OPW 1711TK Locking cap.

(3) OPW 1711-V3" Elbow.

(4) 2" Vent pipe.

(5) Aluminum drop tube (extend to within 6" bottom of tank).

(6) OPW 61AS Adapter or OPW 633T Adapter

(7) OPW 60 Elbow or OPW 60T Elbow

Note: Vent pipes may be manifolded.

EXECUTIVE ORDER G-70-2-D

EXHIBIT 1

OPW SYSTEM A TYPE 5
VAPOR RECOVERY SYSTEM

EXECUTIVE ORDER G-70-2-D

EXHIBIT 2

Equipment Approved for Use as Interchangeable with the OPW System A Type 5 Vapor Recovery System for Underground Storage Tanks at Gasoline Service Stations

Manufacturer	Fill Tube	Dust Caps		Adaptors		Elbows		Pressure Vacuum Relief Valve
		Fill	Vapor	Fill	Vapor	Fill	Vapor	
OPW	61 T	*62* 634 TT 62 TT	1711 TK 1711 T	61 AS 633 T	1611 AV3	60 60 T	1711 V3 *1711 VP* *1711 VT*	 95 UTE
Universal	723	731 FT 732 FT	0612 VC	724 S 727	0611 V3			46
EBW	782	777 775	304	778 776	300			802
McDonald	245	268 C 267 C		236 W 268 A 267 A				
C. N. I.		64-4 32-4	611-Vr3		A611 DB			
Emco-Wheaton	A20 Sh-63	A 39 A 29 A 49	A 82 491521	A 30 A 50	A 76		F 77	A 84
Andrews	TF	54 FPC 54 LC 162 LC	400 DC-L	54 AG 161 AS		56 TFR		
Varec								2010-81
Evertite				97 A		99 C		

Note: Revisions to Executive Order G-70-2-C noted in italics.