State of California
AIR RESOURCES BOARD

Executive Order G-70-23-AB

Recertification of the Exxon Balance
Phase II Vapor Recovery System

WHEREAS, the Air Resources Board (the "Board") has established, pursuant to Sections 39600, 39601 and 41954 of the Health and Safety Code, certification procedures for systems designed for the control of gasoline vapor emissions during motor vehicle fueling operations ("Phase II vapor recovery systems") in its "Certification Procedures for Gasoline Vapor Recovery Systems at Service Stations" as last amended December 4, 1981 (the "Certification Procedures"), incorporated by reference in Section 94001 of Title 17, California Code of Regulations;

WHEREAS, the Board has established, pursuant to Sections 39600, 39601 and 41954 of the Health and Safety Code, test procedures for determining the compliance of Phase II vapor recovery systems with emission standards in its "Test Procedures for Determining the Efficiency of Gasoline Vapor Recovery Systems at Service Stations" as last amended September 1, 1982 (the "Test Procedures"), incorporated by reference in Section 94000 of Title 17, California Code of Regulations;

WHEREAS, Exxon has requested certification of a modification of the Phase II vapor recovery piping configuration, in that the Phase I vapor return is not located on the tank but is manifolded into the Phase II vapor return/vent line, as shown in Exhibit 2 of this Order;

WHEREAS, the modification of the Exxon Balance Phase I vapor recovery system has been evaluated pursuant to the Certification Procedures and Test Procedures;

WHEREAS, Section VIII-A of the Certification Procedures provides that the Executive Officer shall issue an order of certification if he or she determines that the vapor recovery system conforms to all of the requirements set forth in Sections I through VII of the Certification Procedures;

WHEREAS, I find that the Exxon Balance Phase II vapor recovery system modified as set forth in this Executive Order conforms with all the requirements set forth in paragraphs I through VII of the Certification Procedures;

NOW THEREFORE, IT IS HEREBY ORDERED that Executive Order G-70-23-AA, issued on February 8, 1983, is hereby modified to add the previously identified modification of the Phase I connection to the Phase II vapor recovery system.

IT IS FURTHER ORDERED that the maximum length of the pipe run from the Phase I vapor recovery connection to the manifolded vapor return/vent line shall not exceed 18 (eighteen) feet in length, and the maximum length of the pipe run from the tank riser to the manifolded vapor return/vent line shall not exceed 6 (six) feet in length.

IT IS FURTHER ORDERED that this system is certified to be at least 95 percent effective in the self-serve and/or attendant use at gasoline service stations when used with a Board certified Phase I vapor recovery system. Typical piping arrangements for this system are described in Exhibits 1 and 2 of this Order. Certified Phase I components are listed in the latest revision of Executive Order G-70-97, and certified Phase II components and hose configurations are contained in the latest revision of G-70-52.

IT IS FURTHER ORDERED that compliance with the certification requirements and rules and regulations of the Division of Measurement Standards of the Department of Food and Agriculture, the State Fire Marshal's Office, and the Division of Occupational Safety and Health of the Department of Industrial Relations is made a condition of this certification.

IT IS FURTHER ORDERED that the system certified hereby shall perform in actual use with the same effectiveness as the certification test system. Compliance with this performance criterion shall be a condition of this certification, and failure to meet this criterion shall constitute grounds for revocation, suspension or modification of this certification.

IT IS FURTHER ORDERED that any alteration of the equipment, parts, design, or operation of the configurations certified hereby, is prohibited, and deemed inconsistent with this certification, unless such alteration has been approved by the Executive Officer or his/her designee.

IT IS FURTHER ORDERED that the certified Phase II vapor recovery system shall, at a minimum, be operated in accordance with the manufacturer's operation, installation, and maintenance procedures, if available.

IT IS FURTHER ORDERED that the certified Phase II vapor recovery system shall, at a minimum, be operated in accordance with the manufacturer's recommended maintenance intervals and shall use the manufacturer's recommended operation, installation, and maintenance procedures, if available.

IT IS FURTHER ORDERED that the certified Phase II vapor recovery system shall be performance tested during installation for ability to dispense gasoline and collect vapors in the presence of the station manager or other responsible individual. The station manager, owner, or operator shall be provided with instructions on the proper use, maintenance, and repair of the system, and where system components can be readily obtained. A copy of the system warranty shall also be made available to the station manager, owner, or operator.

Executed at Sacramento, California this 14th day of May, 1990.

James D. Boyd
Executive Officer

Exhibit 1

Executive Order G-70-23-AB

Exxon Balance Phase II
Vapor Recovery System

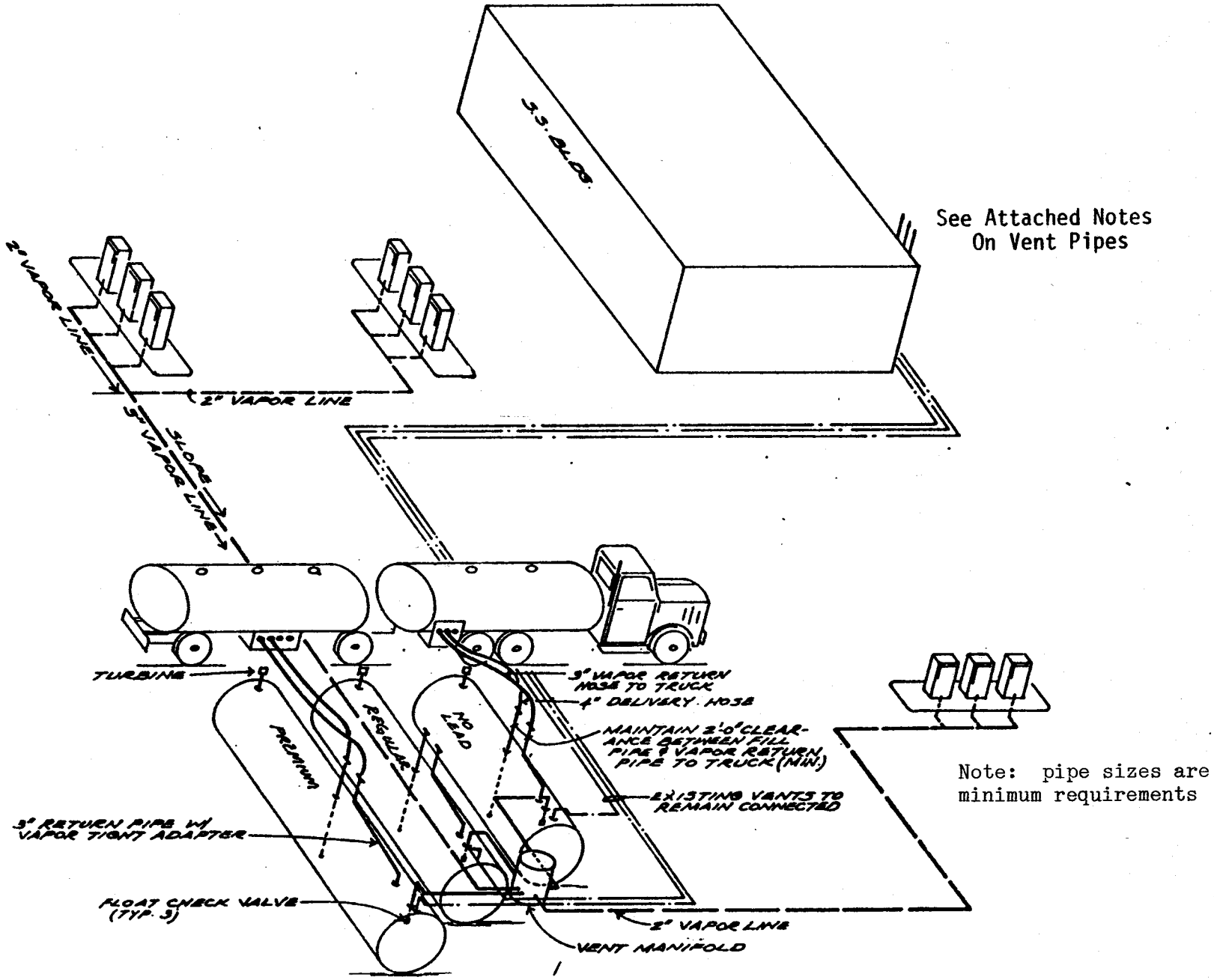

Note: pipe sizes are minimum requirements

EXHIBIT 2
EXECUTIVE ORDER G-70-23-AB
EXXON BALANCE VAPOR RECOVERY SYSTEM

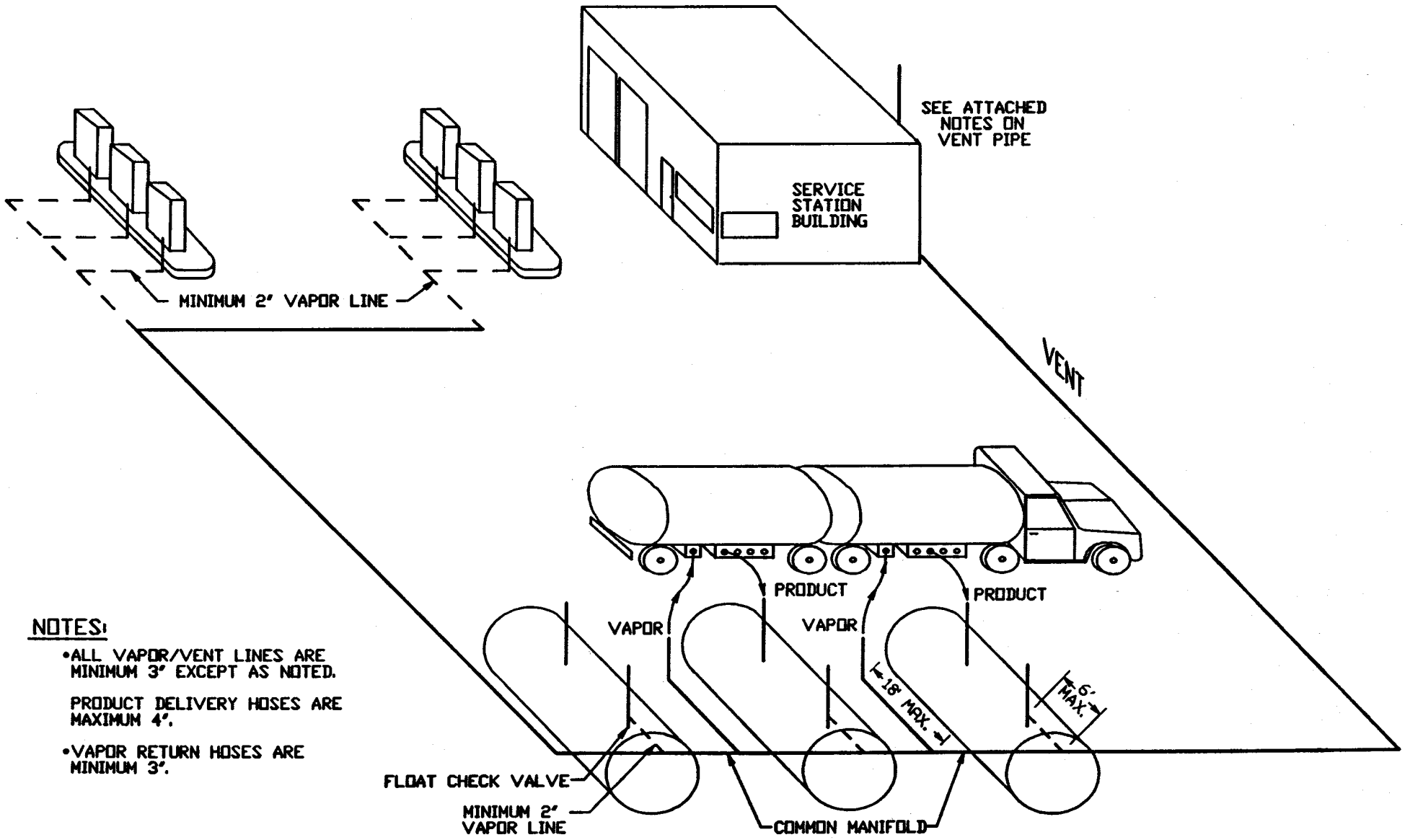

NOTES:

- ALL VAPOR/VENT LINES ARE MINIMUM 3" EXCEPT AS NOTED.

  PRODUCT DELIVERY HOSES ARE MAXIMUM 4".

- VAPOR RETURN HOSES ARE MINIMUM 3".

EXECUTIVE ORDER G-70-23-AB
NOTES TO ACCOMPANY EXHIBITS 1 AND 2

1. For non-retail outlets which fuel special vehicles, the installation of vapor recovery hoses longer than specified in the latest version of Executive Order G-70-52 are allowed if the following conditions are met:

   a. The non-retail outlet fuels special vehicles such as large trucks, large skip loaders, off-the-road equipment, etc., where reaching the fill pipe requires longer hoses.

   b. The vapor return hoses are arranged to be self-draining or provisions are made to drain the hoses after each refueling or the system incorporates an approved liquid blockage detection arranged to cease dispensing when a blockage occurs.

   c. The Executive Officer of the Air Resources Board or his/her designee has approved the plans for compliance with condition b.

2. The maximum allowable pressure drop through a system including nozzle, vapor hose, swivels, and underground piping is:

   a. 0.15 inch water at a flow of 20 CFH;
   b. 0.45 inch water at a flow of 60 CFH;
   c. 0.95 inch water at a flow of 100 CFH;

   The drybreak to the underground must be open during the pressure drop test.

3. The vent pipes and vent manifold shall be adequately supported throughout their length and, when they are supporting weights in addition to their own, additional supports may be required such as anchoring to a building or other structure.

4. All vapor return and vent piping shall be equipped with swing joints at the base of the riser to each dispensing unit, at each tank connection and at the base of the vent riser where it fastens to a building or other structure. When a swing joint is used in a riser containing a shear section, the riser must be rigidly supported.

5. Float check valves (or alternative equipment, design, or operating procedures acceptable to the Air Resources Board) are required for all underground manifolded piping systems installed on or after November 13, 1980, to prevent contamination of unleaded gasoline with leaded gasoline, via vapor recovery piping, during underground storage tank loading or overfill.