State of California

AIR RESOURCES BOARD

Executive Order G-70-33

Relating to the Certification of the
Hirt VCS-200
Service Station Phase II Vapor Recovery System

Pursuant to the authority vested in the Air Resources Board (ARB) by Health and Safety Code Section 41954; and

Pursuant to the authority vested in the undersigned by Health and Safety Code Sections 39515 and 39516;

IT IS ORDERED AND RESOLVED: That the Hirt VCS-200 Phase II vapor collection and disposal system is hereby certified to be 99+ percent effective for attendant and/or self-service use at gasoline service stations in conjunction with Phase I vapor recovery systems which have been certified by the Air Resources Board. The system certified hereby is described in Exhibits 1 and 2 attached hereto.

IT IS FURTHER ORDERED AND RESOLVED: That compliance with the applicable certification requirements and rules and regulations of the Division of Measurement Standards, the State Fire Marshal's Office, and the Division of Industrial Safety of the Department of Industrial Relations is made a condition of this certification.

IT IS FURTHER ORDERED AND RESOLVED: That the system certified hereby shall perform in actual use with the same effectiveness as the certification test system. Compliance with this performance criterion shall be a condition of this certification, and failure to meet this criterion shall constitute grounds for revocation, suspension, or modification of this certification.

IT IS FURTHER ORDERED AND RESOLVED: That any alteration to the equipment, parts, design, or operation of the system certified hereby, is prohibited, and deemed inconsistent with this certification, unless such alteration has been approved by the undersigned.

IT IS FURTHER ORDERED AND RESOLVED: That in order for vapor return hoses longer than specified in this certification to be used the system shall incorporate a liquid blockage detector which is acceptable to the undersigned.

Executed at Sacramento, California this 13th day of March, 1979.

Thomas C. Austin

Thomas C. Austin
Executive Officer

Exhibit 1

Executive Order G-70-33
Hirt VCS-200 Phase II Vapor Recovery System

(See Exhibit 2 for Component List by Manufacturer, Model, and State Fire Marshal Identification Number)

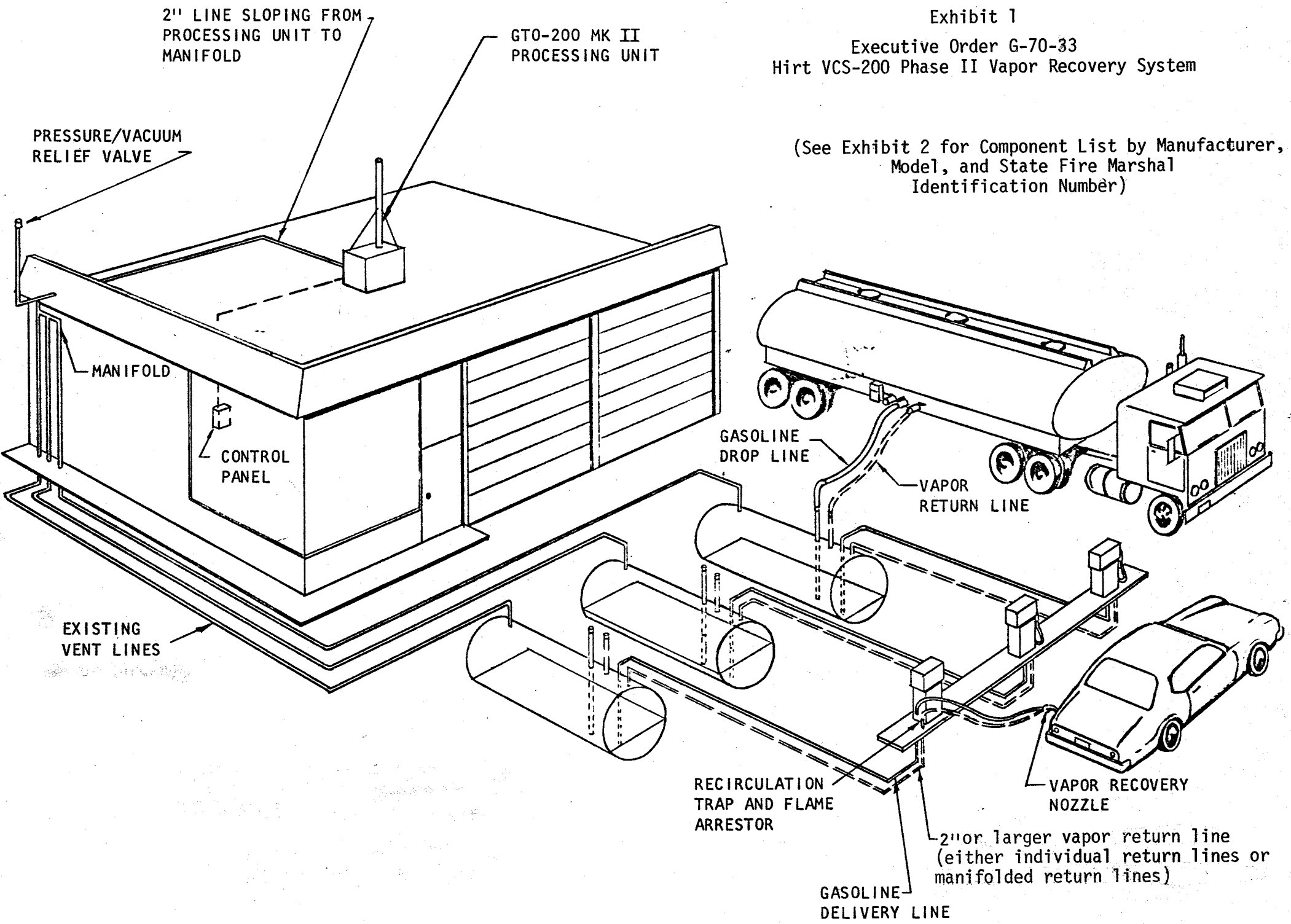

EXHIBIT 2

Executive Order G-70-33
Hirt VCS-200
Vapor Recovery System

Component List

	Item	Manufacturer and Model	State Fire Marshal Identification Number	Substitute Equipment: Manufacturer and Model	Substitute Equipment: State Fire Marshal Identification Number
1.	Nozzle	Emco Wheaton A3003 (Extended Spout, Large Diaphram) Vapor Recovery Nozzle (unleaded) Emco Wheaton A3003 (Short Spout, Large Diaphram) Vapor Recovery Nozzle (leaded)	GVRC 001:007:5		
2.	Vapor Hose	5/8 in. or larger I.D. by 8 ft.			
3.	Riser	3/4 in. or larger diameter Galvanized Pipe			
4.	Flame arrestor (at each dispenser)	G.W. Liske 4640-1¼	GVRC 004:015:2		
5.	Swivels	State Fire Marshal Approved.			
	a. Nozzles	0.495 in. ID minimum			
	b. Island	State Fire Marshal Approved. 0.495 in. ID minimum			
6.	Flow Limiter	Emco Wheaton A-10	GVRC 001:007:1		
7.	Recirculation Trap	Emco Wheaton A-8	GVRC 001:007:4	OPW 78, 78-S, 78-E, or 78-ES	GVRC 001:008:13
8.	Processing Unit	Hirt GTO-200 MK II	GVRC 004:015:1		
9.	Control panel	Hirt VCS-0030	GVRC 004:015:5		
10.	Pressure/vacuum relief valve	Varec 2010-811	GVRC 005:006:1		

Notes to Accompany Exhibits 1 and 2

1. Vent pipes shall be adequately supported throughout their length and when they are supporting weights in addition to their own, additional supports may be required - anchor to building or other structure.

2. All vapor return and vent piping shall be provided with swing joints at the base of the riser to each dispensing unit, at each tank connection, and at the base of the vent riser where it fastens to a building or other structure. When a swing joint is used in a riser containing a shear section the riser must be rigidly supported.

3. Each vapor hose shall be located such that the center line of the hose fitting, at the recirculation trap (if externally mounted) or at the dispenser cabinet swivel mounting (if trap is internally mounted), is not more than 3-1/2 inches above the top surface of the island and is as close as possible to the top surface of the island.

4. For dispenser islands greater than 5 feet in width, each vapor hose length shall not be longer than the sum of one-half the dispenser island width, in feet, plus 6 feet.

5. State Fire Marshal approved swivels (and offsets if necessary) for this system shall be selected and installed on hoses to prevent hose kinking.

6. Product hoses one foot or more longer than the vapor hose shall be installed at each dispenser to provide for full extension of the vapor return hose.

7. If any OPW 78 series recirculation trap is internally mounted in any dispenser, the top of the recirculation trap shall not be higher than the top surface of the dispenser island and a vapor recovery piping shear section which meets State Fire Marshal requirements shall be installed.

8. On dual dispensers dispensing the same product from both sides, the vapor return lines may be connected to a single OPW 78 series recirculation trap mounted internally in the dispenser.