State of California

AIR RESOURCES BOARD

Executive Order G-70-33-A

Relating to the Modification of the Certification of the
Hirt VCS-200
Service Station Phase II Vapor Recovery System

Pursuant to the authority vested in the Air Resources Board (ARB) by Health and Safety Code Section 41954; and

Pursuant to the authority vested in the undersigned by Health and Safety Code Sections 39515 and 39516;

IT IS ORDERED AND RESOLVED: That the certification Executive Order G-70-33 issued on March 13, 1979 for the Hirt VCS-200 Phase II vapor collection and disposal system is hereby modified to

1. Include the OPW-7VE vapor recovery nozzle with Hazlett HC-2 ball check valve as an alternate nozzle;

2. To include the OPW-7VC vapor recovery nozzle as an alternate nozzle;

3. To include alternate high hose configurations, described in Exhibits 3 and 4;

4. To delete dispenser flame arrestor requirements;

5. To include an alternate pressure/vacuum relief valve; and

6. To eliminate the previously allowed use of a single OPW 78 series recirculation trap on dual dispensers dispensing the same product from both sides.

The system hereby modified is certified to be at least 95% effective in self-serve and/or attendant use at gasoline service stations in conjunction with Phase I vapor recovery systems which have been certified by the Air Resources Board. The system is described in Exhibits 1, 2, 3 and 4 attached hereto.

IT IS FURTHER ORDERED AND RESOLVED: That compliance with the applicable certification requirements and rules and regulations of the Division of Measurement Standards, the State Fire Marshal's Office, and the Division of Industrial Safety of the Department of Industrial Relations is made a condition of this certification.

IT IS FURTHER ORDERED AND RESOLVED: That the system certified hereby shall perform in actual use with the same effectiveness as the certification test system. Compliance with the applicable performance criterion shall be a condition of this certification, and failure to meet this criterion shall constitute grounds for revocation, suspension, or modification of this certification.

IT IS FURTHER ORDERED AND RESOLVED: That any alteration to the equipment, parts, design, or operation of the system certified hereby, is prohibited, and deemed inconsistent with this certification, unless such alteration has been approved by the undersigned.

IT IS FURTHER ORDERED AND RESOLVED: That the Emco Wheaton A3003, OPW-7VE, and OPW-7VC nozzles shall be 100 percent performance checked at the factory including checks of proper functioning of all automatic shut-off mechanisms.

IT IS FURTHER ORDERED AND RESOLVED: That during installation of the Emco Wheaton A3003, OPW-7VE, and OPW-7VC nozzles, they shall be performance tested for ability to dispense gasoline without difficulty in the presence of the station manager or other responsible individual. The station manager, owner or operator shall also be provided with instructions on the proper use of the nozzles, their repair and maintenance, and where nozzle replacements and nozzle components can be readily obtained. A copy of the nozzle warranty shall be made available to the station manager, owner or operator.

IT IS FURTHER ORDERED AND RESOLVED: That in order for vapor return hoses longer than specified in this certification to be used the system shall incorporate a liquid blockage detector which is acceptable to the undersigned.

Executed at Sacramento, California this 4th day of March, 1980.

Thomas C. Austin
Executive Officer

Exhibit 1

Executive Order G-70-33-A

Hirt VCS-200 Phase II Vapor Recovery System

(See Exhibits 2, 3, and 4 for Component List by Manufacturer, Model, and State Fire Marshal Identification Number)

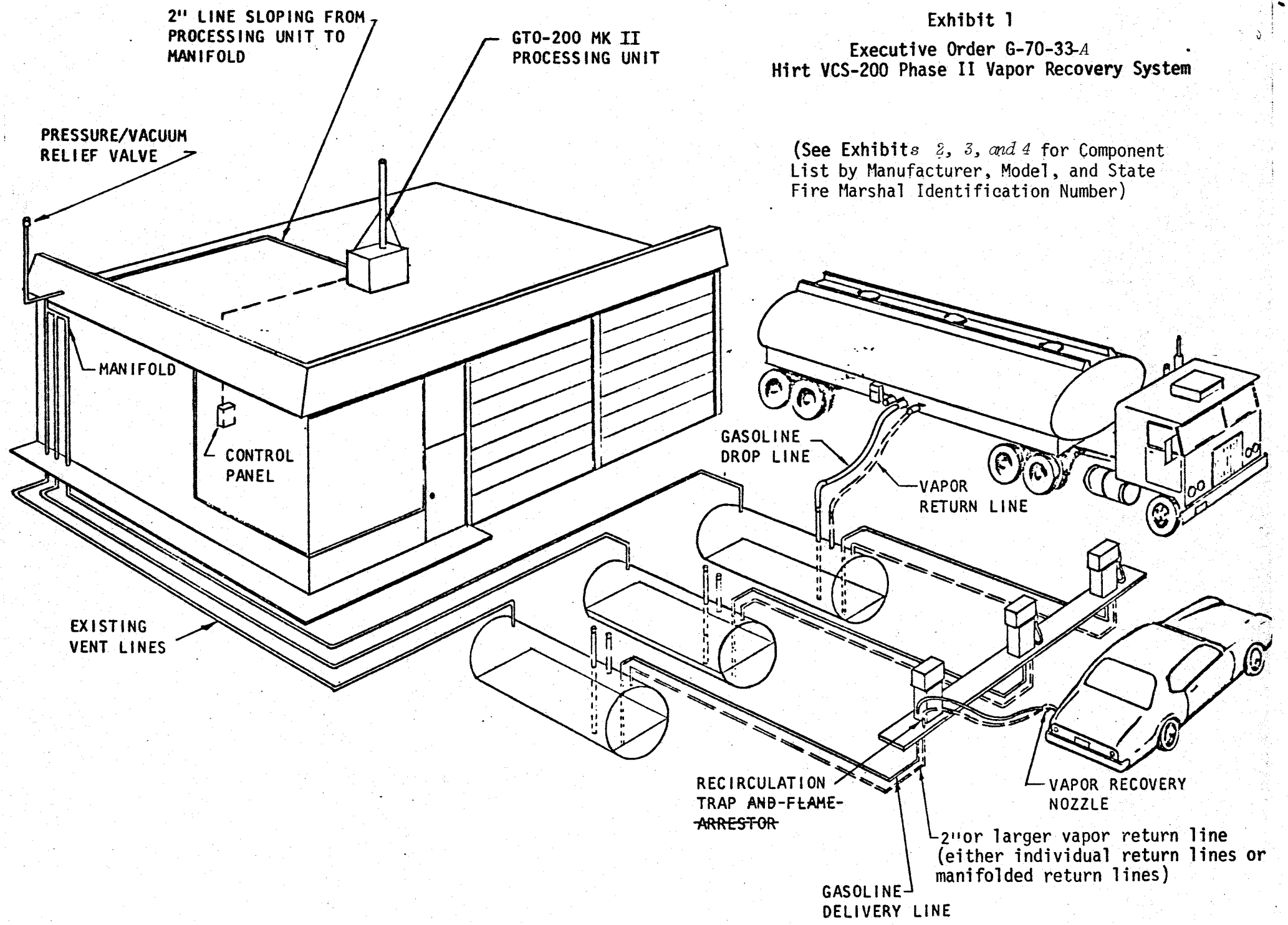

EXHIBIT 2

Executive Order G-70-33-A
Hirt VCS-200
Vapor Recovery System

Component List

Item	Manufacturer and Model	State Fire Marshal Identification Number	Substitute Equipment: Manufacturer and Model	Substitute Equipment: State Fire Marshal Identification Number
1. Nozzle	Emco Wheaton A3003 (Extended Spout, Large Diaphram) Vapor Recovery Nozzle (unleaded)	GVRC 001:007:5	*OPW-7VE-49 (unleaded)*	*GVRC 002:008:17*
			OPW-7VE-36 (leaded)	*GVRC 002:008:15*
			OPW-7VE-47 (unleaded)	*GVRC 002:008:16*
			OPW-7VE-34 (leaded)	*GVRC 002:008:14*
			(each above nozzle shall be installed with Hanlett HC-2 ball check valve)	
	Emco Wheaton A3003 (Short Spout, Large Diaphram) Vapor Recovery Nozzle (leaded)		*OPW 7-V Model C-47 OPW 7-V Model C-49 (unleaded)*	*GVRC 001:008:19*
			OPW 7-V Model C-22 OPW 7-V Model C-24 (leaded)	*GVRC 001:008:18*
2. Vapor Hose[1]	5/8 in.[2] I.D. by 8 ft.		*3/4 in.[2] or larger I.D. by 8 ft.*	
3. Riser	3/4 in. or larger diameter Galvanized Pipe			
~~4. Flame arrester (at each dispenser)~~	~~G.W. Liske-4640-1¼~~	~~GVRC-004:0015:2~~		
4. Swivels	State Fire Marshal Approved.			
a. Nozzles	0.495 in. ID minimum			
b. Island	State Fire Marshal Approved. 0.495 in. ID minimum			
5. Flow Limiter[3]	Emco Wheaton A-10	GVRC 001:007:1		
6. Recirculation Trap[4]	Emco Wheaton A-8	GVRC 001:007:4	OPW 78, 78-S, 78-E, or 78-ES	GVRC 001:008:13
7. Processing Unit	Hirt GTO-200 MK II	GVRC 004:015:1	*Emco Wheaton A94-001* *Emco Wheaton A95-001*	*GVRC 005:007:8* *GVRC 005:007:9*
8. Control panel	Hirt VCS-0030	GVRC 004:015:5		
9. Pressure/vacuum relief valve	Varec 2010-811	GVRC 005:006:1	*Hanlett H-PVB-1*	*GVRC 005:017:3*

1. *For alternate hose configuration requirements see Exhibits 3 and 4.*

2. *Maximum dispensing rate 8 gpm, except with OPW-7VE nozzle, Hazlett HC-2 ball check valve, and 3/4 inch or larger I.D. vapor hose, for which maximum dispensing rate is 12 gpm.*

3. *Not required with OPW-7VE and OPW-7VC nozzles.*

4. *Not required with alternate hose configurations (see Exhibits 3 and 4).*

Exhibit 3
Executive Order G-70-33-A

Hirt VCS-200 Service Station
Phase II Vapor Recovery System
Alternate Hose Configuration with OPW-7VE Nozzle

NOZZLE:	*OPW-7VE*
BALL CHECK VALVE:	*Hazlett HC-2*
FLUID HOSE LENGTH:	*Fluid hose length shall be selected and hose installed to avoid interference with vapor hose operation.*
VAPOR HOSE LENGTH:	*As needed to permit natural drainage into dispenser and still avoid kinking when fully extended*
VAPOR HOSE DIAMETER:	*5/8" inside diameter (8 gpm maximum dispensing rate)* *3/4" inside diameter (12 gpm maximum dispensing rate)*
RETRACTOR:	*Petro Vend PV-8 (GVRC 005:023;1), Red Jacket (GVRC 002:001:17) or State Fire Marshal approved equivalent*
CABLE LENGTH:	*10 Feet*
RECIRCULATION TRAP:	*None*
SWIVELS:	*360° in-line on each end of both fluid and vapor hose. State Fire Marshal Approved 0.495 in. I.D. minimum*

INSTALLATION DIMENSIONS:

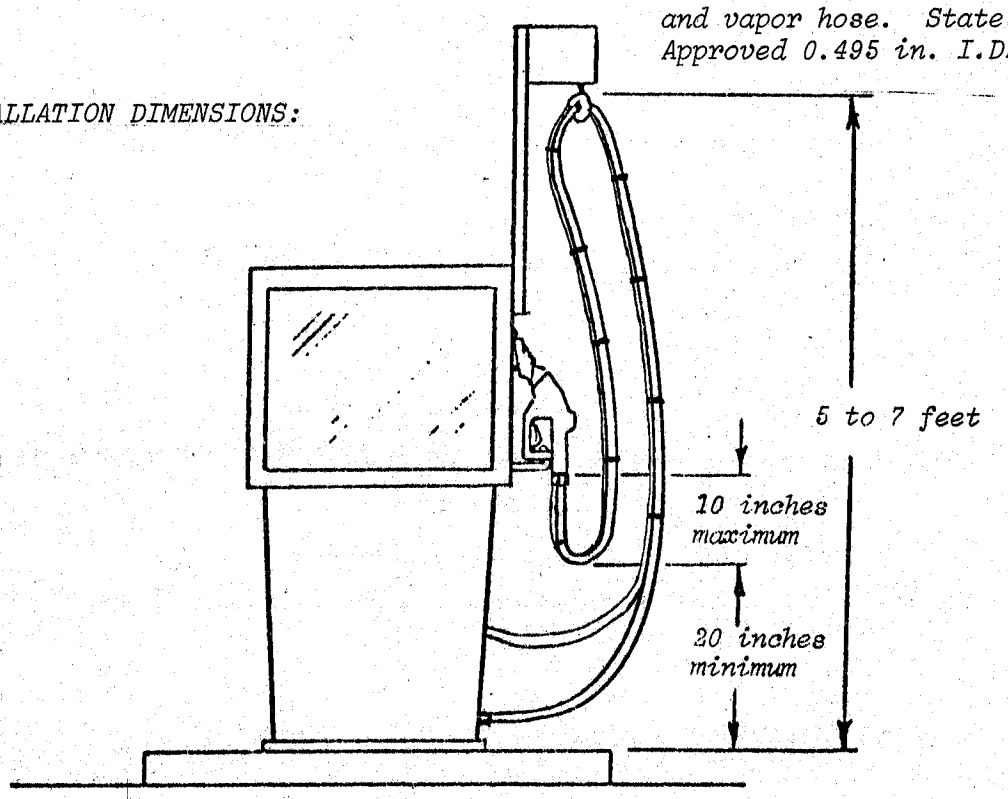

Exhibit 4

Executive Order G-70-33-A

Hirt VCS-200 Service Station Phase II Vapor Recovery System
Alternate Hose Configuration with Emco Wheaton A-3003 Nozzle

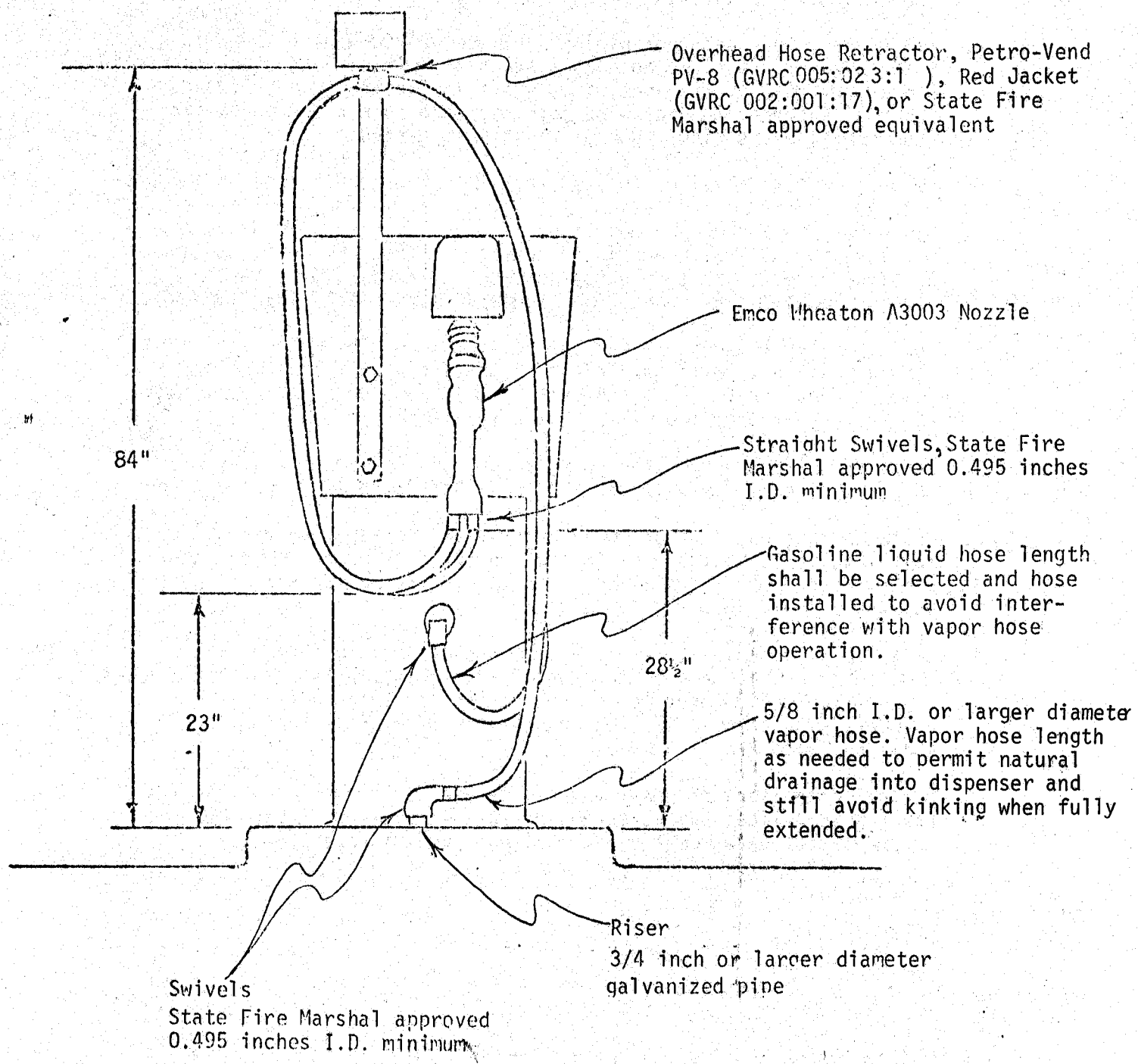

Notes:
1. Flow limiter Emco Wheaton A-10 (GVRC 001:007:1) required.
2. Recirculation trap not required.
3. Use 6 to 8 hose ties, with first tie approximately 24 inches from nozzle.

Executive Order G-70-33-A

Notes to Accompany Exhibits 1, 2, *3 and 4*

1. Vent pipes shall be adequately supported throughout their length and when they are supporting weights in addition to their own, additional supports may be required - anchor to building or other structure.

2. All vapor return and vent piping shall be provided with swing joints at the base of the riser to each dispensing unit, at each tank connection, and at the base of the vent riser where it fastens to a building or other structure. When a swing joint is used in a riser containing a shear section the riser must be rigidly supported.

3. Each vapor hose shall be located such that the center line of the hose fitting, at the recirculation trap (if externally mounted) or at the dispenser cabinet swivel mounting (if trap is internally mounted), is not more than 3-1/2 inches above the top surface of the island and is as close as possible to the top surface of the island. *(This note does not apply to alternate hose configurations, Exhibits 3 and 4).*

4. For dispenser islands greater than 5 feet in width, each vapor hose length shall not be longer than the sum of one-half the dispenser island width, in feet, plus 6 feet. *(This note does not apply to alternate hose configurations, Exhibits 3 and 4).*

5. State Fire Marshal approved swivels (and offsets if necessary) for this system shall be selected and installed on hoses to prevent hose kinking.

6. Product hoses one foot or more longer than the vapor hose shall be installed at each dispenser to provide for full extension of the vapor return hose. *(This note does not apply to alternate hose configurations, Exhibits 3 and 4).*

7. If any OPW 78 series *or Emco Wheaton A94-001* recirculation trap is internally mounted in any dispenser, the top of the recirculation trap shall not be higher than the top surface of the dispenser island and a vapor recovery piping shear section which meets State Fire Marshal requirements shall be installed.

~~8.--On-dual-dispensers-dispensing-the-same-product-from-both-sides,-the vapor-return-lines-may-be-connected-to-a-single-OPW-78-series recirculation-trap-mounted-internally-in-the-dispenser.~~