State of California
AIR RESOURCES BOARD

Executive Order G-70-33-AB

Certification of the Modified Hirt VCS-200 Vacuum Assist
Phase II Vapor Recovery System

WHEREAS, the Air Resources Board (the "Board") has established, pursuant to Sections 39600, 39601, and 41954 of the Health and Safety Code, certification procedures for systems designed for the control of gasoline vapor emissions during motor vehicle fueling operations ("Phase II vapor recovery systems") in its "Certification Procedures for Gasoline Vapor Recovery Systems at Service Stations" as last amended December 4, 1981 (the "Certification Procedures"), incorporated by reference in Section 94001 of Title 17, California Administrative Code;

WHEREAS, the Board has established, pursuant to Sections 39600, 39601, and 41954 of the Health and Safety Code, test procedures for determining compliance of Phase II vapor recovery systems with emission standards in its "Test Procedures for Determining the Efficiency of Gasoline Vapor Recovery Systems at Services Stations" as last amended September 1, 1982 (the "Test Procedures"), incorporated by reference in Section 94000 of Title 17, California Administrative Code;

WHEREAS, Hirt Combustion Engineers has applied for certification of a turbine which would replace the existing vapor pump in the processor portion of the Hirt VCS-200 vacuum assist Phase II vapor recovery system. .

WHEREAS, the Hirt VCS-200 vacuum assist Phase II vapor recovery system, modified to replace the existing vapor pump with a turbine, has been evaluated pursuant to the Certification Procedures and Test Procedures;

WHEREAS, Section VIII.A. of the Certification Procedures provides that the Executive Officer shall issue an order of certification if he or she determines that a vapor recovery system conforms to all of the requirements set forth in paragraphs I through VII;

WHEREAS, I find that the Hirt VCS-200 vacuum assist Phase II vapor recovery system modified by replacing the existing vapor pump with a turbine will not affect vapor recovery system efficiency and may improve the reliability of the system;

WHEREAS, I find that the Hirt VCS-200 vacuum assist Phase II vapor recovery system modified as set forth in this Executive Order conforms with all the requirements set forth in paragraphs I through VII of the Certification Procedures and is at least 95 percent effective for attendant and/or self-serve use at gasoline service stations when used in conjunction with a Phase I vapor recovery system that has been certified by the Board.

NOW, THEREFORE, IT IS HEREBY ORDERED that the certification, Executive Order G-70-33-AA, issued on February 8, 1983 for the Hirt VCS-200 vacuum assist Phase II vapor recovery system is hereby modified to allow the modification of the Hirt VCS-200 vapor recovery system processor to replace the existing vapor pump with a turbine.

IT IS FURTHER ORDERED that this modified system is certified to be at least 95 percent effective in the self-serve and/or attendant use at gasoline service stations when used with a Board certified Phase I vapor recovery system. A typical piping arrangement for this system is described in Exhibit 1. All certified components are listed in Exhibit 2 or the latest revision of Executive Order G-70-52.

IT IS FURTHER ORDERED that compliance with the applicable certification requirements and rules and regulations of the Division of Measurement Standards, the State Fire Marshal's Office, and the Division of Occupational Safety and Health of the Department of Industrial Relations is made a condition of this certification.

IT IS FURTHER ORDERED that the modified system certified hereby shall perform in actual use with the same effectiveness as the certification test system. Compliance with this performance criterion shall be a condition of this certification, and failure to meet this criterion shall constitute grounds for revocation, suspension or modification of this certification.

IT IS FURTHER ORDERED that any alteration of the equipment, parts, design, or operation of the configurations certified hereby, is prohibited, and deemed inconsistent with this certification, unless such alteration has been approved by the undersigned or the Executive Officer's designee.

IT IS FURTHER ORDERED that the certified Phase II vapor recovery system shall, at a minimum, be operated in accordance with the manufacturer's recommended maintenance intervals and shall use the manufacturer's recommended operation, installation, and maintenance procedures, if available.

IT IS FURTHER ORDERED that the certified Phase II vapor recovery system shall be performance tested during installation for ability to dispense gasoline and collect vapors without difficulty in the presence of the station manager or other responsible individual. The station manager, owner, or operator shall be provided with instructions on the proper use, maintenance, and repair of the system, and where system components can be readily obtained. A copy of the system warranty shall also be made available to the station manager, owner, or operator.

Executed at Sacramento, California this 9 day of March, 1984.

James D. Boyd
Executive Officer

EXECUTIVE ORDER G-70-33-AB
NOTES TO ACCOMPANY EXHIBIT 1

1. For non-retail outlets which fuel special vehicles, the installation of vapor recovery hoses longer than specified in the latest version of Executive Order G-70-52 are allowed if the following conditions are met:

   a. The non-retail outlet fuels special vehicles such as large trucks, large skip loaders, off-the-road equipment, etc. where reaching the fill pipe requires longer hoses.

   b. The vapor return hoses are arranged to be self-draining or provisions are made to drain the hoses after each refueling or the system incorporates an approved liquid blockage detection system arranged to cease dispensing when a blockage occurs.

   c. The Executive Officer of the Air Resources Board or his/her designee has approved the plans for compliance with condition b.

2. The maximum allowable pressure drop through a system including nozzle, vapor hose, swivels, and underground piping is:

   a. 0.15 inch water at a flow of 20 CFH;
   b. 0.45 inch water at a flow of 60 CFH;
   c. 0.95 inch water at a flow of 100 CFH.

   A pressure drop test must be conducted with the drybreak to the underground tank open.

3. The vent pipes and vent manifold shall be adequately supported throughout their length and when they are supporting weights in addition to their own, additional supports may be required, such as anchoring to a building or other structure.

4. All vapor return and vent piping shall be equipped with swing joints at the base of the riser to each dispensing unit, at each tank connection, and at the base of the vent riser where it fastens to a building or other structure. When a swing joint is used in a riser containing a shear section, the riser must be rigidly supported.

5. On new installations, float check valves (or alternate equipment, design, or operating procedures acceptable to the Air Resources Board) are required for all underground manifolded piping to prevent contamination of unleaded gasoline with leaded gasoline, via vapor recovery piping, during underground storage tank loading or overfill.

6. Electrical power to the processing unit may be turned "off" when power to the service station gasoline pumps are "off", provided that the processing unit is electrically wired to the station master switch such that the processing unit is automatically turned "on" when power to the gasoline pumps are turned "on".

7. The indicator lamp on the control panel for the VCS-200-2 processor shall be labeled "vacuum". The indicator lamp shall be wired to the processor to detect when there is insufficient vacuum in the vapor return lines.

Exhibit 2

Executive Order G-70-33-AB

Hirt VCS-200 Phase II Vapor Recovery System

Component List[1/]

Item	Manufacturer/Model	State Fire Marshal Identification No.
Processing Unit[2]	Hirt VCS-200-1 Hirt VCS-200-2	004:015:1 004:015:1
Control Panel	Hirt VCS-0030	004:015:5
Pressure/vacuum relief valve	Varec 2010-811 Hazlett H-PVB-1	005:006:1 005:017:3

1/ For additional approved components, see the latest version of Executive Order G-70-52.

2/ Hirt processor, Model VCS-200-1 which is operated using compressed air or Model VCS-200-2 which is operated using an electric powered turbine.

Exhibit 1

Executive Order G-70-33-AB
Hirt VCS-200 Phase II Vapor Recovery System
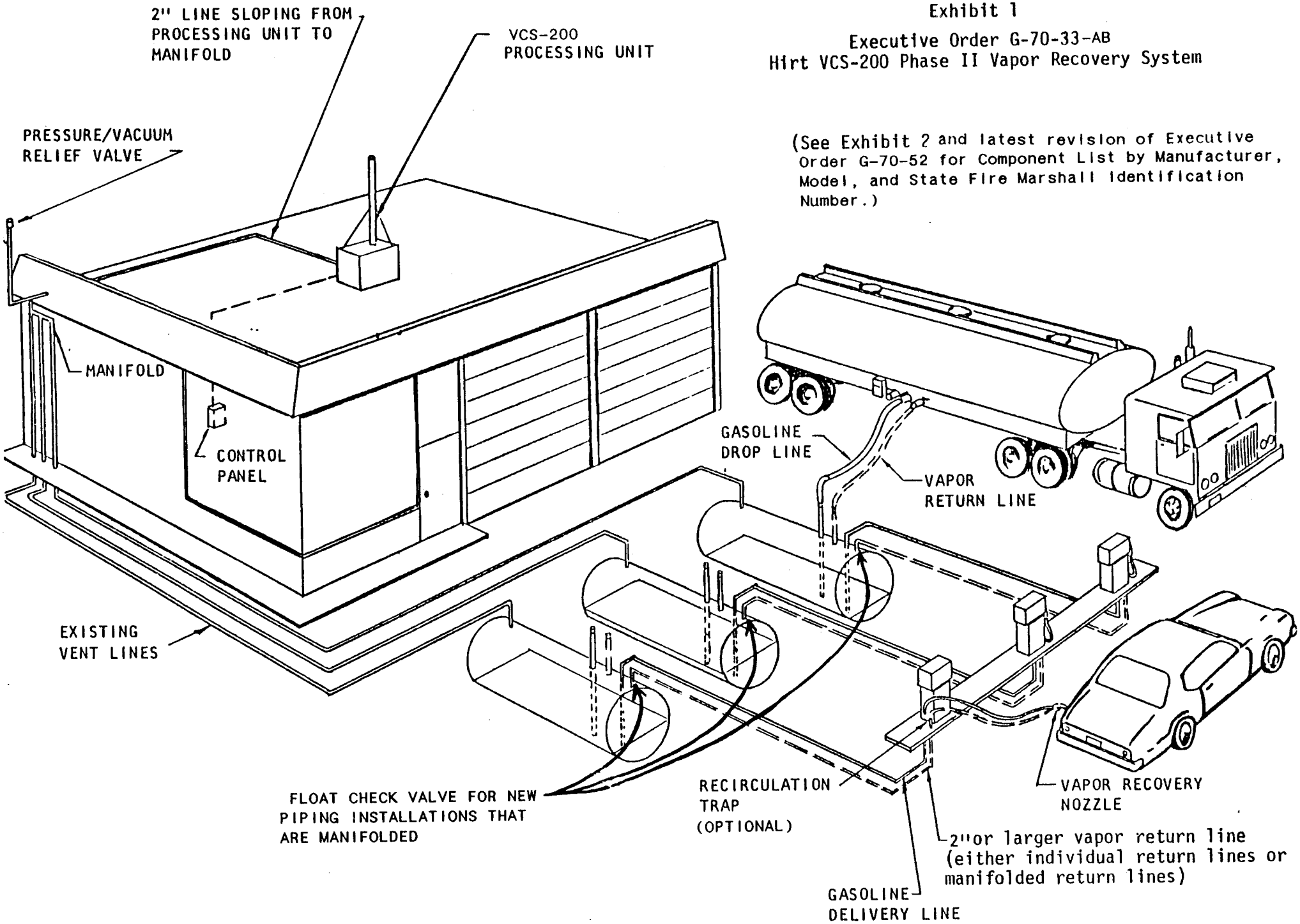
(See Exhibit 2 and latest revision of Executive Order G-70-52 for Component List by Manufacturer, Model, and State Fire Marshall Identification Number.)