State of California
AIR RESOURCES BOARD

Executive Order G-70-47-A

Relating to the Modification of the Certification of the OPW Coaxial Vapor Recovery System for Underground Storage Tanks at Gasoline Service Stations

Pursuant to the authority vested in the undersigned by Health and Safety Code Section 41954; and

Pursuant to the authority vested in the undersigned by Health and Safety Code Sections 39515 and 39516;

IT IS ORDERED AND RESOLVED: That except as provided below, the certification of the OPW coaxial Phase I vapor recovery system, with or without a pressure-vacuum relief valve, is hereby modified to include an alternate size fill tube. The system is certified for use on underground gasoline storage tanks at service stations. The system is shown in Exhibit I, attached;

IT IS FURTHER ORDERED AND RESOLVED: That any underground storage tank equipped with this system and filled by a gasoline delivery tank equipped with pressure-differential activated vapor-return vent valves must have a pressure-vacuum relief valve on the vent of the underground storage tank;

IT IS FURTHER ORDERED AND RESOLVED: That use of the pressure-vacuum valve be subject to approval of the local fire chief, and that the tanks and piping be in compliance with the appropriate General Industry Safety Orders in particular the provisions in Articles 144 and 145, and 146 thereof;

IT IS FURTHER ORDERED AND RESOLVED: That the system certified hereby shall in actual use return to the delivery tanks a minimum of 95 percent by weight of the gasoline vapors displaced from the underground storage tank. Compliance with this criterion shall be a condition of this certification and if not met shall constitute grounds for revocation, suspension, or modification of this certification; and

IT IS FURTHER ORDERED AND RESOLVED: That any alteration in the equipment parts, design, or operation of the system certified hereby is prohibited and deemed inconsistent with this certification unless the alteration has been approved by the undersigned.

Executed at Sacramento, California this 8th day of February, 1980.

For Gary Rubenstein
Thomas C. Austin
Executive Officer

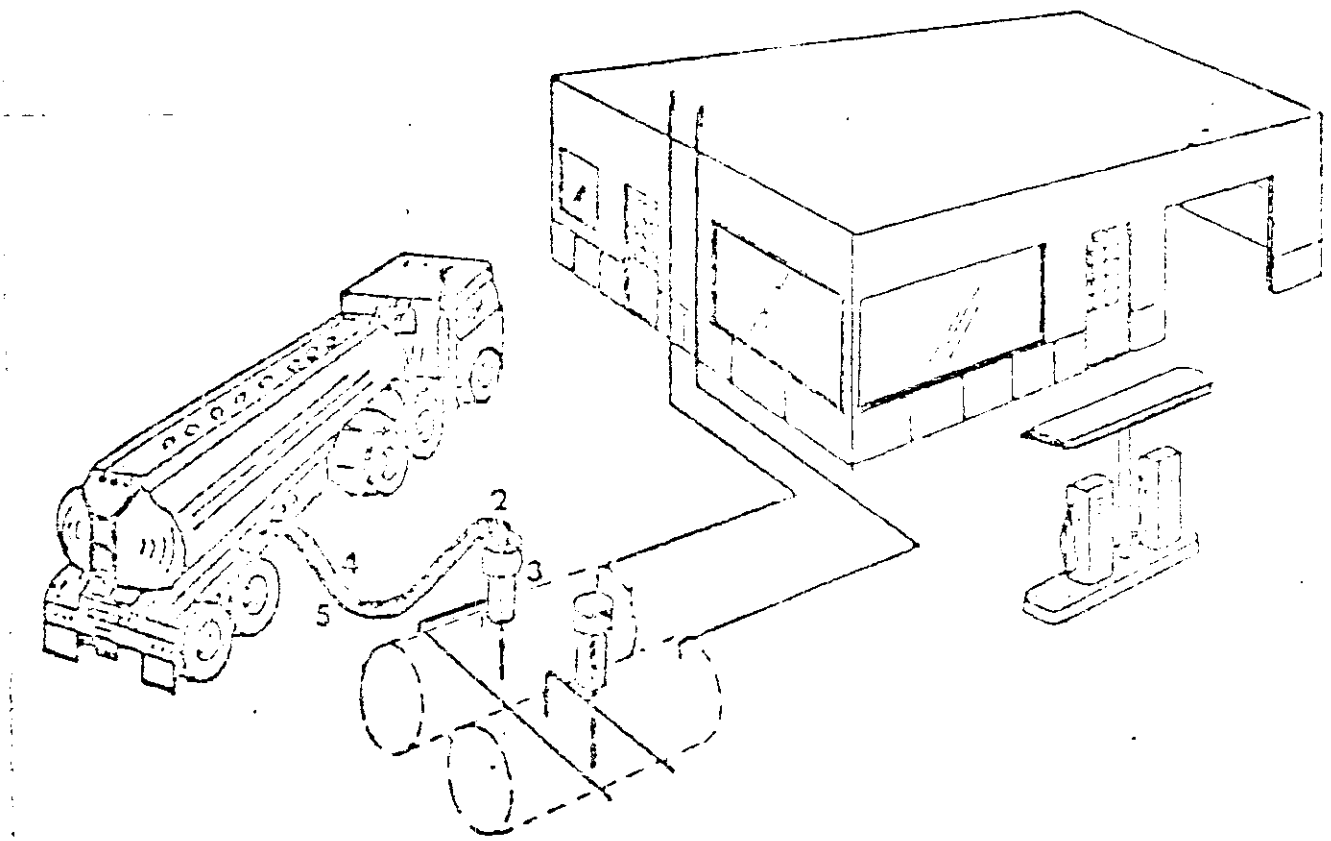

EXHIBIT I

Executive Order G-70-47-A
Parts List

OPW

1. 2" Open vent pipe (P/V valve optional)

2. OPW No. 60-TC-4 "co-axial elbow.

3. OPW No. 633-TCP-4" "co-axial adaptor with OPW No. 61-TCP-4" co-axial fill tube *(or No. 61-TCP-3" co-axial fill tube with No. 53-TCP-4"x3" bushing)* (drop tube extended to within 6" of the bottom of tank)

4. 3" vapor return line

5. 4" product hose

Emco Wheaton (Interchangeable Parts)

1. 2" open vent pipe (P/V valve optional)

2. F-298 co-axial elbow

3. A88-001, A88-003, A88-005, or A88-007 co-axial tube and adapter with Andrew 54LC cap or for retro-fitting existing Emco Wheaton co-axial systems the following Emco Wheaton retrofit kits: A88-002, A88-004, A88-006, or A88-008 (drop tube extended to within 6" of the bottom of tank)

4. 3" vapor return line

5. 4" product hose

NOTE: Vent pipes may be manifolded