State of California
AIR RESOURCES BOARD

Executive Order G-70-47-B

Relating to the Modification of the Certification of the OPW Coaxial Vapor Recovery System for Underground Storage Tanks at Gasoline Service Stations.

WHEREAS, the Air Resources Board (the "Board") has established, pursuant to Sections 39600, 39601, and 41954 of the Health and Safety Code, certification procedures for systems designed for the control of gasoline vapor emissions displaced during the filling of underground tanks at service stations ("Phase I vapor recovery systems") in its "Certification Procedures for Gasoline Vapor Recovery Systems at Service Stations" as last amended December 4, 1981 (the "Certification Procedures"), incorporated by reference in Section 94001 of Title 17, California Administrative Code;

WHEREAS, the Board has established, pursuant to Sections 39600, 39601, and 41954 of the Health and Safety Code, test procedures for determining compliance of Phase I vapor recovery systems with emission standards in its "Test Procedures for Determining the Efficiency of Gasoline Vapor Recovery Systems at Services Stations" as last amended September 1, 1982 (the "Test Procedures"), incorporated by reference in Section 94000 of Title 17, California Administrative Code;

WHEREAS, Dover Corporation/OPW Division ("OPW") has applied for certification to add optional components, for the purpose of overfill protection, to the certification of the existing OPW Model C-2 Phase I vapor recovery system. The modified system, referred to as an OPW C-3 Phase I vapor recovery system, incorporates an OPW Model 233 VM Extractor S/A, an OPW Model 53 VM Float Vent Valve, and an OPW Model 116 4 inch pipe cap;

WHEREAS, the OPW Model C-3 Phase I vapor recovery system has been evaluated pursuant to the Board's Certification Procedures and Test Procedures;

WHEREAS, Section VIII-A of the Certification Procedures provides that the Executive Officer shall issue an order of certification if he or she determines that a vapor recovery system conforms to all of the requirements set forth in Sections I through VII;

WHEREAS, I find that the OPW Model C-3 Phase I vapor recovery system conforms with all the requirements set forth in Sections I through VII of the Certification Procedures and is at least 95 percent efficient when connected to a vapor tight cargo tank equipped with compatible fittings for all installations except those service stations equipped with Red Jacket and Healy Phase II vapor recovery systems.

NOW THEREFORE, IT IS HEREBY ORDERED that the certification, Executive Order G-70-47-A, issued on February 8, 1980 for the OPW Model C-2 Phase I vapor recovery system (Exhibit 1), is hereby modified to allow the optional use of the OPW Model C-3 Phase I vapor recovery system on underground gasoline storage tanks at service stations except those service stations equipped with Red Jacket and Healy Phase II vapor recovery systems. The system is shown in Exhibit 2;

IT IS FURTHER ORDERED that the use of pressure-vacuum valve shall require the prior approval of the local fire chief, and that the tanks and piping shall comply with the appropriate General Industry Safety Orders and in particular the provisions of Articles 144, 145, and 146 thereof.

IT IS FURTHER ORDERED that compliance with the applicable certification requirements and rules and regulations of the Division of Measurement Standards, the Office of the State Fire Marshal, and the Division of Occupational Safety and Health of the Department of Industrial Relations is made a condition of this certification.

IT IS FURTHER ORDERED that the system certified hereby shall in actual use return to the delivery tanks a minimum of 95 percent by weight of the gasoline vapors displaced from the underground storage tank. Compliance with this criterion shall be a condition of this certification and if not met shall constitute grounds for the revocation, suspension, or modification of this certification;

IT IS FURTHER ORDERED that any alteration of the equipment, parts, design, or operation of the configurations certified hereby, is prohibited, and deemed inconsistent with this certification, unless such alteration has been approved by the undersigned or the Executive Officer's designee.

Executed at Sacramento, California this 14 day of Sept, 1984.

James D. Boyd
Executive Officer

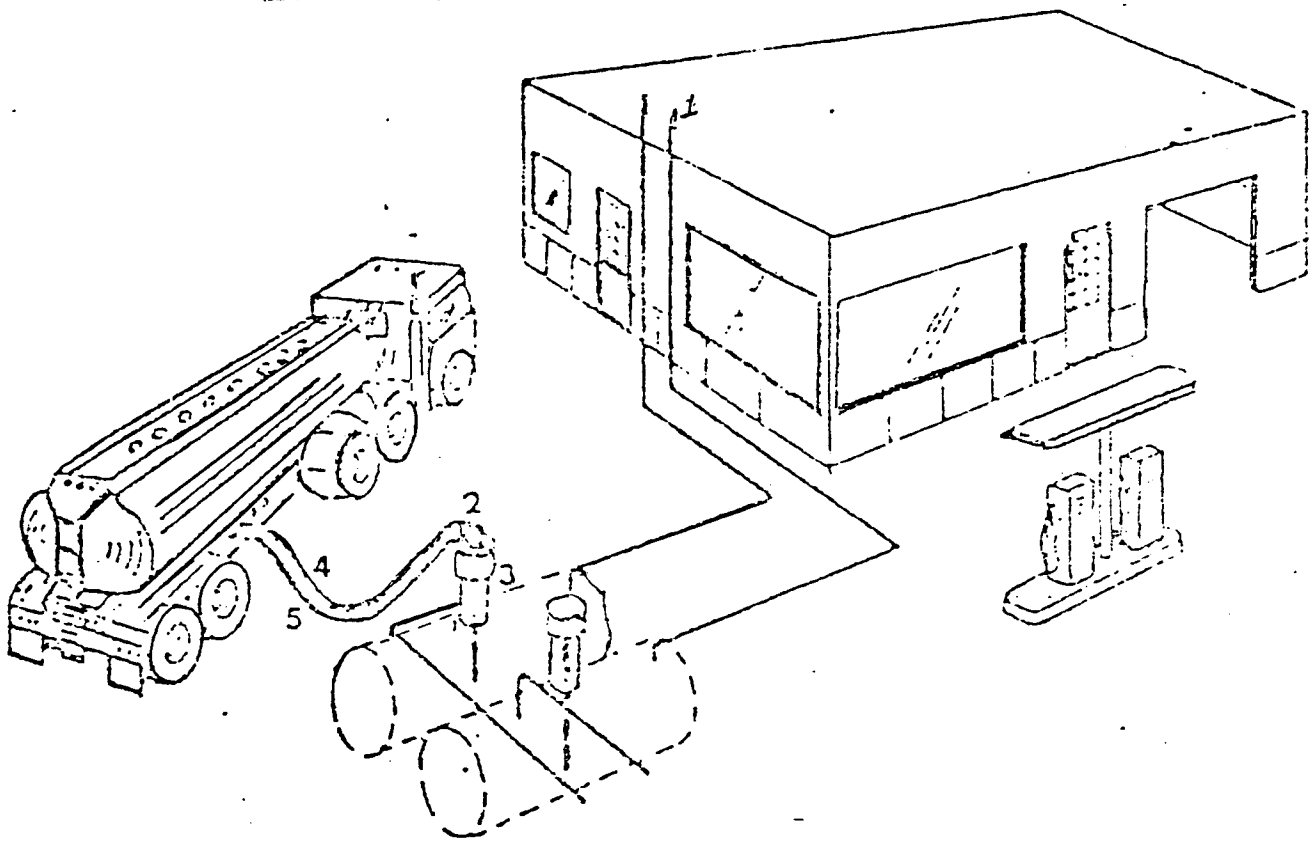

EXHIBIT I

OPW Model C-2 Phase I Vapor Recovery System
Executive Order G-70-47-B
Parts List

OPW	Emco Wheaton (Interchangeable Parts)
1. 2" Open vent pipe (P/V valve optional)	1. 2" open vent pipe (P/V valve optional)
2. OPW No. 60-TC-4 "co-axial" elbow.	2. F-298 co-axial elbow
3. OPW No. 633-TCP-4" "co-axial adaptor with OPW No. 61-TCP-4" co-axial fill tube *(or No. 61-TCP-3" co-axial fill tube with No. 53-TCP-4"x3" bushing)* (drop tube extended to within 6" of the bottom of tank) OPW No. 634TT Fill Cap	3. A88-001, A88-003, A88-005, or A88-007 co-axial tube and adapter with Andrew 54LC cap or for retro-fitting existing Emco Wheaton co-axial systems the following Emco Wheaton retrofit kits: A88-002, A88-004, A88-006, or A88-008 (drop tube extended to within 6" of the bottom of tank)
4. 3" vapor return line	4. 3" vapor return line
5. 4" product hose	5. 4" product hose

NOTE: Vent pipes may be manifolded

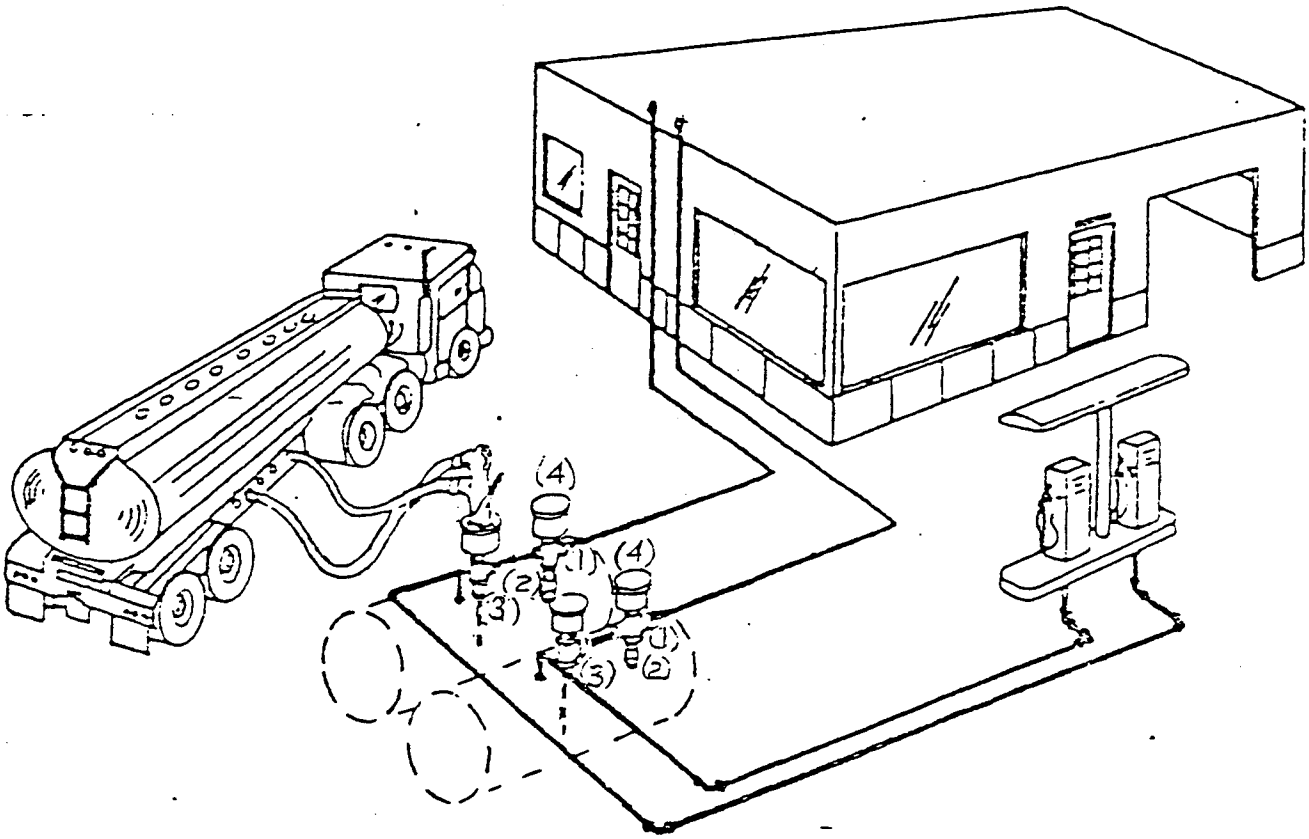

PARTS LIST

(1) OPW 233VM Extractor S/A.
(2) OPW 53VM Float Vent Valve.
(3) 4" x 4" x 3" Tee Fitting with 3" x 2" Reducing Bushing.
(4) OPW 116 4" Pipe Cap.

Note: All other acceptable components are listed on Exhibit I.

The OPW Model C-3 Phase I vapor Recovery system is not approved for use at service stations equipped with Red Jacket or Healy Phase II vapor recovery systems.

Executive Order G-70-47-B
EXHIBIT 2
OPW MODEL C-3
PHASE I VAPOR RECOVERY SYSTEM