EXHIBIT 11a
Executive Order G-70-52-AM
Low-Profile Dispenser with Retractors
For New and Existing Installations

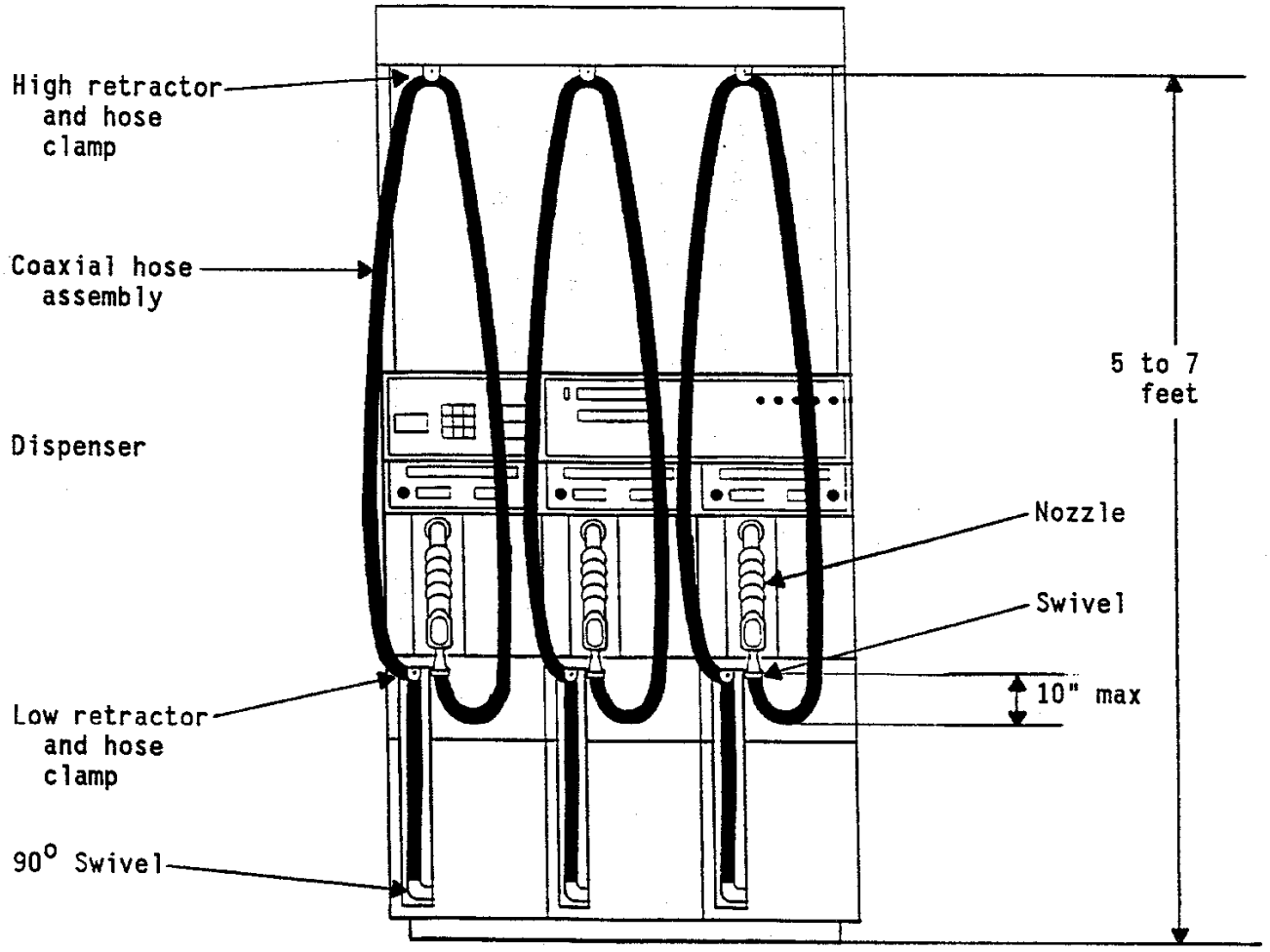

Notes:
1. Use 1 inch or larger inside diameter galvanized pipe for riser.
2. A flow limiter is required on dispensers that have a maximum flowrate in excess of 10 gpm. A flow limiter may be required on all gasoline dispensers at the option of the local air pollution control district.
3. Low retractor must be present and must retract hose to dispenser when not in use. Hose must fit snugly against dispenser from low retractor to 90 degree swivel.
4. High retractor must retract hose fully when hose is not in use and must provide natural drainage from high retractor to the 90° swivel.
5. Tension on retractor hose clamp must not be in excess of that required to return hose to dispenser.
6. The Emco Wheaton and EZ-flo A4001 and A4003 nozzles are permitted only when used in conjunction with approved vapor check valves.