EXHIBIT 7
Executive Order G-70-52-AM
Dual Hose Dispenser-Mount High-Retractor Configuration
For Existing Installations Only

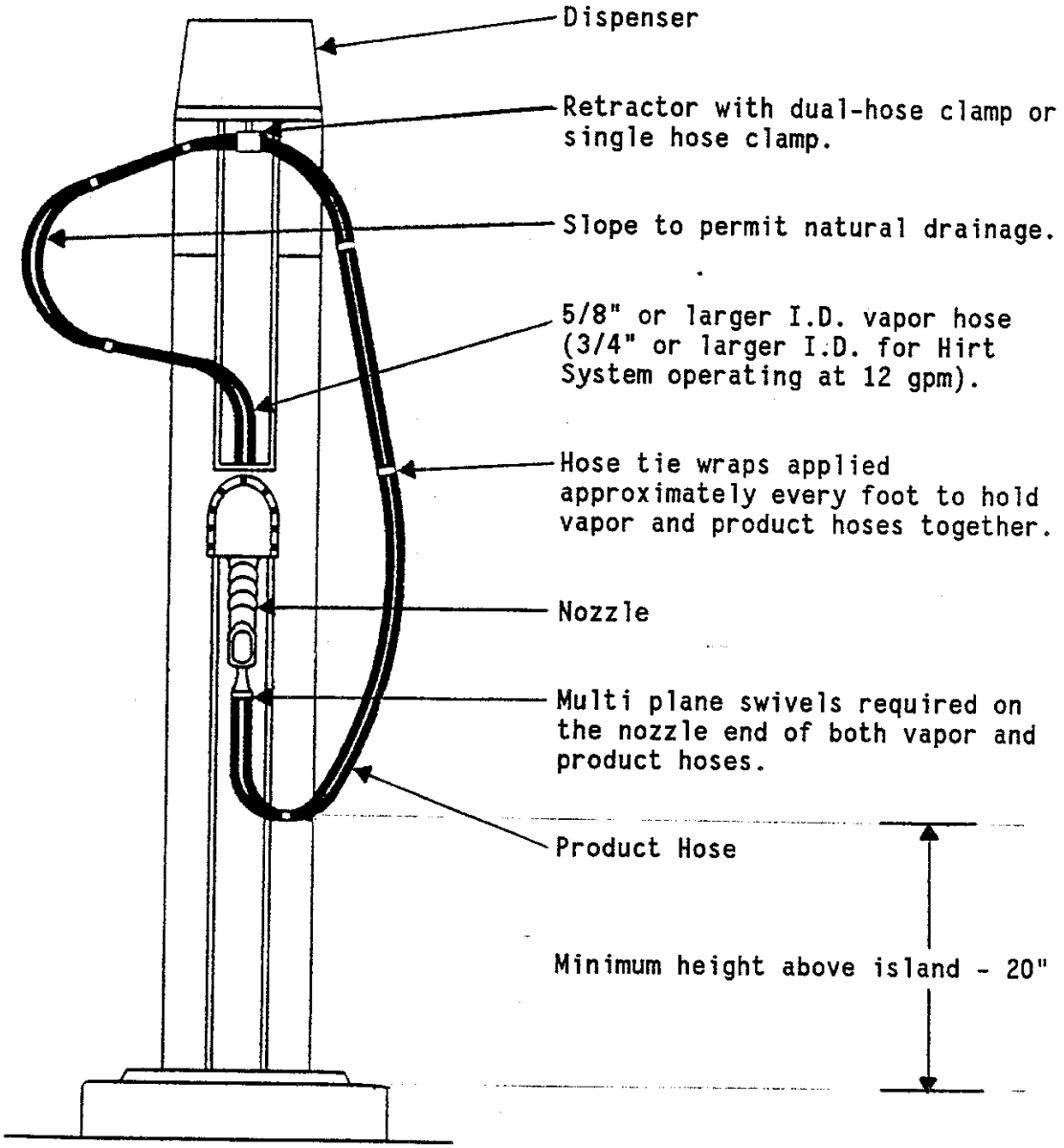

Notes:
1. See Exhibit 2 for the component list.
2. A flow limiter is required on dispensers that have a maximum flowrate in excess of 10 gpm (12 gpm for dispensers for the Hirt System).
3. Hose swivels not required at dispenser end of hoses.
4. Riser must be 3/4 inch or larger inside diameter galvanized pipe.
5. Dual hose dispenser-mount high-retractor configuration not permitted on new installations.
6. The Emco Wheaton and EZ-flo A4000 and A4002 nozzles are permitted only when used in conjunction with certified vapor check valves.