State of California
AIR RESOURCES BOARD

Executive Order G-70-52-AM
Certification of Components for Red Jacket, Hirt, and Balance
Phase II Vapor Recovery Systems

WHEREAS, the Air Resources Board (the "Board") has established, pursuant to Sections 39600, 39601, and 41954 of the Health and Safety Code, certification procedures for systems designed for the control of gasoline vapor emissions during motor vehicle fueling operations ("Phase II vapor recovery systems") in its "Certification Procedures for Gasoline Vapor Recovery Systems at Service Stations" as last amended December 4, 1981 (the "Certification Procedures"), incorporated by reference in Section 94001 of Title 17, California Code of Regulations;

WHEREAS, the Board has established, pursuant to Sections 39600, 39601, and 41954 of the Health and Safety Code, test procedures for determining compliance of Phase II vapor recovery systems with emission standards in its "Test Procedures for Determining the Efficiency of Gasoline Vapor Recovery Systems at Service Stations" as last amended September 1, 1982 (the "Test Procedures"), incorporated by reference in Section 94000 of Title 17, California Code of Regulations;

WHEREAS, the certification for use with Phase II vapor recovery systems has been applied for as specified in Attachment A of this Executive Order;

WHEREAS, Section VIII-A of the Certification Procedures provides that the Executive Officer shall issue an order of certification if he or she determines that a vapor recovery system conforms to all of the requirements set forth in Sections I through VII;

WHEREAS, I find that the equipment specified in Attachment A of this Executive Order, when used on Phase II balance and assist vapor recovery systems, conforms with all the requirements set forth in Sections I through VII of the Certification Procedures and will not compromise the efficiency of the Phase II vapor recovery systems on which they will be installed;

NOW THEREFORE, IT IS HEREBY ORDERED that the certification, Executive Order G-70-52-AL, is hereby modified to add vapor recovery equipment listed in Attachment A and to incorporate the requirements and conditions specified in the Exhibits of this Order for use on Phase II vapor recovery systems;

IT IS FURTHER ORDERED that the equipment listed in Attachment A of this Executive Order is certified as shown in Exhibits 4 through 11. A reference identifying the vapor recovery systems for which the hose configurations are approved is contained in Exhibit 1. Certified components for the systems are listed in Exhibit 2. A cross reference identifying which vapor recovery nozzle is approved for each vapor recovery system is shown in Exhibit 3. The systems shall otherwise comply with all the certification requirements in the latest applicable Phase II vapor recovery system certification.

IT IS FURTHER ORDERED that where a balance type vapor recovery system is to be installed at a new installation only the balance type coaxial vapor recovery nozzles and coaxial hose configurations may be used.

IT IS FURTHER ORDERED that nozzle bellows covers, hereinafter refered to as "boot protectors" may not be used on any nozzles after July 26, 1992, and that they are prohibited prior to that date on certain nozzles as specified in Exhibits 2 and 3 of this Order.

IT IS FURTHER ORDERED that the compliance with the applicable certification requirements and rules and regulations of the Division of Measurement Standards, the Office of the State Fire Marshal, and the Division of Occupational Safety and Health of the Department of Industrial Relations are made a condition of this certification.

IT IS FURTHER ORDERED that the components and alternative hose configurations certified hereby shall perform in actual use with the same effectiveness as the certification test system.

IT IS FURTHER ORDERED that any alteration of the equipment, parts, design, or operation of the configurations certified hereby, is prohibited, and deemed inconsistent with this certification, unless such alteration has been approved by the undersigned or the Executive Officer's designee.

IT IS FURTHER ORDERED that all nozzles approved for use with the Phase II vapor recovery systems specified in this Executive Order shall be 100 percent performance checked at the factory including checks of proper functioning of all automatic shutoff mechanisms.

Executed at Sacramento, California this 4 day of October, 1991.

James D. Boyd
Executive Officer

Executive Order G-70-52-AM
Attachment A

Gasoline Vapor Recovery Equipment Added to Exhibit 2

Dresser Division/Wayne Industries
- 590 Blending Dispenser
- 390Dx-GQU Dispenser

Emco Wheaton A4019 coaxial hose breakaway coupling

Gates Kleanaire coaxial hose

Gilbarco Advantage motor fuel dispenser

Goodyear Maxxim coaxial hose with green outer hose

High retractor dispenser - coaxial hose configuration with liquid removal system (Exhibit 8c)

OPW Division/Dover Corporation
- 66-CL coaxial hose breakaway coupling
- 43-CRT elbow swivel

Exhibit 1

Executive Order G-70-52-AM

Phase II Vapor Recovery Systems

Certified for Hose Configurations Shown in Exhibits 4-11

Executive Order G-70-	Vapor Recovery System Name
14	Red Jacket
17	Emco Wheaton Balance
23	Exxon Balance
25	Atlantic Richfield Balance
33	Hirt
36	OPW Balance
38	Texaco Balance
48	Mobil Balance
49	Union Balance
53	Chevron Balance

Additional Executive Orders Pertaining to

Vapor Recovery Nozzles Not Listed in the Above Orders

Executive Order G-70-	Vapor Recovery System Name
78	EZ-flo rebuilts
102	EZ-flo rebuilts
107	Rainbow rebuilts
125	Husky Model V
127	OPW 111V
134	EZ-flo rebuilts

Exhibit 2

Executive Order G-70-52-AM
Component[1/] List for Red Jacket, Hirt, or Balance
Phase II Vapor Recovery Systems

Manufacturer/Item and Model Number	SFM ID Number	Exhibits 4	5	6	7	8a,b,c	9a,b,c	10	11	11a	Exhibit 3 X-Reference
Nozzles (new or rebuilt by original manufacturer)[2/]											
Emco Wheaton A3003, RA3003[7/]	001:007:005	X		X	X						1
Emco Wheaton A3005, RA3005	005:007:006	X	X	X	X	X	X	X	X	X	2
Emco Wheaton A3006, RA3006	005:007:020	X		X	X						3
Emco Wheaton A3007, RA3007	005:007:025	X	X	X	X	X	X	X	X	X	4
Emco Wheaton A4000, RA4000[7/8]	005:007:022	X		X	X						5
Emco Wheaton A4001, RA4001[8/]	005:007:023	X	X	X	X	X	X	X	X	X	6
Emco Wheaton A4002[8/]	005:007:022	X		X	X						7
Emco Wheaton A4003[8/]	005:007:023	X	X	X	X	X	X	X	X	X	8
Emco Wheaton A4005, RA4005[8/]	005:007:025	X	X	X	X	X	X	X	X	X	9
OPW 7V-E (34,36,47,49)	002:008:014-17	X		X	X						10
OPW 11V-C (22,24,47,49)	005:008:030	X	X	X	X	X	X	X	X	X	11
OPW 11VS-C (22,24,47,49)[7/]	005:008:039	X		X	X						12
OPW 11V-E (34,36,47,49)	005:008:033	X	X	X	X	X	X	X	X	X	13
OPW 11VS-E (34-36,47,49)	005:008:035	X		X	X						14
OPW 11V-F (22,24,47,49)	005:008:037	X	X	X	X	X	X	X	X	X	15
OPW 11VS-F (22,24,47,49)[7/]	005:008:038	X		X	X						16
OPW 111-V (22,24,47,49)[8/]	005:008:045	X	X	X	X	X	X	X	X	X	17
Husky Model V[8/]	005:021:005	X	X	X	X	X	X	X	X	X	18

Executive Order G-70-52-AM
Component[1/] List for Red Jacket, Hirt, or Balance
Phase II Vapor Recovery Systems

Manufacturer/Item and Model Number	SFM ID Number	Exhibits 4	5	6	7	8a,b,c	9a,b,c	10	11	11a	Exhibit 3 X-Reference
Rebuilt Nozzles (rebuilt by other than original manufacturer)[2/]											
EZ-flo 3003[7/9/]	005:029:003	X		X	X						1
EZ-flo 3005[9/]	005:029:004	X	X	X	X	X	X	X	X	X	2
EZ-flo 3006[9/]	005:029:004	X		X	X						3
EZ-flo 3007[9/]	005:029:005	X	X	X	X	X	X	X	X	X	4
EZ-flo A4000[7/8/]	005:029:006	X		X	X						5
EZ-flo A4001[8/]	005:029:006	X	X	X	X	X	X	X	X	X	6
EZ-flo A4002[8/9/]	005:029:006	X		X	X						7
EZ-flo A4003[8/9/]	005:029:006	X	X	X	X	X	X	X	X	X	8
EZ-flo A4005[8/9/]	005:029:006	X	X	X	X	X	X	X	X	X	9
EZ-flo EZE 8 (22,24,47,49)[10/]	005:029:002	X		X	X						10a
EZ-flo 11VS (coaxial)[8/]	005:029:007	X	X	X	X	X	X	X	X	X	15
EZ-flo 11VS (dual)[7/8/]	005:029:007	X		X	X						16
EZ-flo 11VE (coaxial)[8/]	005:029:007	X	X	X	X	X	X	X	X	X	13
EZ-flo 11VE (dual)[8/]	005:029:007	X		X	X						14
Rainbow RA3003[7/11/16/]	005:035:002	X		X	X						1
Rainbow RA3005[11/16/]	005:035:003	X	X	X	X	X	X	X	X	X	2
Rainbow RA3006[11/]	005:035:004	X		X	X						3
Rainbow RA3007[11/]	005:035:005	X	X	X	X	X	X	X	X	X	4
Rainbow RPP (34,36,47,49)	005:035:006	X		X	X						10b
Nozzle Bellows											
Daystar [13/]		X	X	X		X	X	X	X		

Executive Order G-70-52-AM
Component[1/] List for Red Jacket, Hirt, or Balance
Phase II Vapor Recovery Systems

Manufacturer/Item and Model Number	SFM ID Number	Exhibits 4	5	6	7	8a	8b	8c	9a	9b	9c	10	11	11a
High-Retractor Hose Configurations[3/]														
Overhead Hose Retractors														
CNI Series 9900, 9910 and 9930		X	X						X	X	X			X
Dresser Wayne 360-series		X	X											
Gasboy Model 90-750-2		X	X											
Gilbarco									X	X	X			
OPW 55 (coax)			X											
OPW 56 (dual)		X												
Petro-Vend PV-8		X	X											
Pomeco 100A, B, C and 102		X	X								X			X
Radikas		X	X								X			X
Red Jacket		X	X								X			X
Rusken		X	X								X			X
Topmaster		X	X								X			X
Universal Valve #880		X	X								X			X
High Retractor Dispensers[4/]														
Bennett Pump 6012, 6013, 6022, 6024, 6025, 6027			X											
Dresser Wayne Series 370/380				X										
Dresser Wayne DecadeMarketer Series 310/320					X									
Gasboy Series 50		X	X											
Tokheim Series 162		X	X											
Tokheim 262 [19/]		X	X											
Tokheim 242 and 244			X											
Tokheim 330A and 333A MMD					X									
Tokheim retrofit 222 and 333												X		
Low Retractor Dispensers[4/]														
Tokheim TCS														
311, 312, 322, 324, 413, 426, 614, 628													X	X

Executive Order G-70-52-AM
Component[1] List for Red Jacket, Hirt, or Balance
Phase II Vapor Recovery Systems

Manufacturer/Item and Model Number	SFM ID Number	Exhibits 4	5	6	7	8a	8b	8c	9a	9b	9c	10	11	11a
High-Hang Hose Dispensers[3]														
Bennett Pump 7012, 7024, 8022, 8024, 8033											X	X		
Bennett Pump 8036, 9036, 9048											X	X		
Dresser Wayne 390					X	X	X	X	X	X	X	X		
Dresser Wayne 490						X	X	X				X		
Dresser Wayne 390Dx-GQU									X	X	X	X		
Gilbarco MPD									X	X	X	X		
Gilbarco Advantage									X	X	X	X		
Koppens Calcutrim											X	X		
Southwest 2300 and 2400 MPD											X	X		
Tokheim High-discharge TCS H311, H312, H322, H324, H413, H426, H614, H628											X	X		
Product Blending Dispensers[18]														
Dresser Wayne 395-1L Blender												X		
Dresser Wayne 375 Blender												X		
Dresser Wayne 585 Blender												X		
Dresser Wayne 590 Blender												X		
Gilbarco SalesMaker (SMK) Blender												X		
Gilbarco Multi-Product (MPD) Blender												X		
Tokehim 262 with blend valves [19]			X											
Tokehim 426 TCS with blend valves												X	X	X
Coaxial Hose Assembly [16]														
B.F. Goodrich Coax	005:014:001		X	X		X			X			X		
B.F. Goodrich Super II Coax	005:014:001		X	X		X			X			X		
Dayco Petroflex 2000 Mdl 7574	005:033:001		X	X		X	X	X	X	X	X	X	X	X
Dayco Petroflex 2000 Mdl 7573	005:033:002		X	X		X	X	X	X	X	X	X	X	X
Dayco Petroflex 3000 Model 7575 Blending Hose	005:033:006											X		
Gates Kleanaire	005:045:001		X	X		X	X	X	X	X	X	X	X	X

(continued next page)

Executive Order G-70-52-AM
Component[1/] List for Red Jacket, Hirt, or Balance
Phase II Vapor Recovery Systems

Manufacturer/Item and Model Number	SFM ID Number	Exhibits 4	5	6	7	8a	8b	8c	9a	9b	9c	10	11	11a
Coaxial Hose Assembly [16/] (continued from previous page)														
Goodyear Maxxim (black or green)														
(1/2" or 5/8" inner hose)	005:036:001		X	X		X	X	X	X	X	X	X	X	X
Thermold Superlite (HPD Industries)														
(1/2" or 5/8" inner hose)	005:037:001		X	X		X	X	X	X	X	X	X	X	X
Vapor Systems Technologies	005:044:001		X	X		X	X	X	X	X	X	X	X	X
Liquid Removal Systems														
Gilbarco Venturi CoVent (1/2")	005:026:011							X			X	X		
Gilbarco CoVent-2 (5/8")	005:026:012							X			X	X		
Wayne Purge System												X		
Coaxial Hose Assemblies with Liquid Removal Systems [22/]														
Dayco Petroflex 7573 (1/2")	005:033:003							X			X	X	X	
Dayco Petroflex 7574 (5/8")	005:033:004							X			X	X	X	
Goodyear Maxxim Plus (5/8")	005:036:001							X			X	X	X	
Thermoid Superlite "V"	005:037:002							X			X	X	X	
Coaxial Hose Fittings														
OPW 38-C [14/]	005:008:041		X	X										
OPW 38-CS [14/]	005:008:041		X	X										
OPW 38-CX [14/]	005:008:041		X	X										
Emco Wheaton 4041 [14/]	005:007:029		X	X										
Emco Wheaton 4042 [21/]	005:007:030		X	X					X	X	X	X		
Hose Breakaway Fittings - Dual Hose Systems Only														
Enterprise Brass Works 697-V	005:034:001	X		X	X									
Husky Safe-T-Break	005:021:003	X		X	X									
Richards R85 Safe-T-Gard	005:031:003	X		X	X									

Executive Order G-70-52-AM
Component[1/] List for Red Jacket, Hirt, or Balance
Phase II Vapor Recovery Systems

Manufacturer/Item and Model Number	SFM ID Number	Exhibits 4	5	6	7	8a	8b	8c	9a	9b	9c	10	11	11a
Coaxial Hose Breakaway Fittings - Factory or Kit Repairable Only														
Catlow C-200	005:030:003		X	X		X	X	X	X	X	X	X	X	X
Dayco C-200	005:033:005		X	X		X	X	X	X	X	X	X	X	X
Enterprise Brass Works 897	005:034:002		X	X		X	X	X	X	X	X	X	X	X
Husky 2730 Safe-T-Break	005:021:004		X	X		X	X	X	X	X	X	X	X	X
Richards Industries CXE-39	005:031:005		X	X		X	X	X	X	X	X	X	X	X
Coaxial Hose Breakaway Fittings - Designed to be Recoupled Without Repair Kit														
Catlow 2.N.1 (Nozzle end[20/] installation prohibited)	005:030:004											X		
Emco Wheaton A4019	005:007:031		X	X		X	X	X	X	X	X	X	X	X
Husky 3030 Safe-T-Break	005:021:004		X	X		X	X	X	X	X	X	X	X	X
Richards Industries CX-40	005:031:004		X	X		X	X	X	X	X	X	X	X	X
Richards Insustries RCX-40	005:031:004		X	X		X	X	X	X	X	X	X	X	X
OPW 66-C (w/ pigtail)	005:008:044											X		
66-CL (w/o pigtail)	005:008:047		X	X		X	X	X	X	X	X	X	X	X
Vapor Check Valves														
Emco Wheaton														
A225	005:007:23	X		X										
A225-003	005:007:23	X		X	X									
A226	005:007:23		X											
A227	005:007:23		X[19/]						X	X	X	X		
A228-001	005:007:024		X	X		X	X	X	X	X	X	X	X	X
Red Jacket systems only may also use:														
Red Jacket 104-184	002:001:003	X	X	X	X	X			X			X		
Hirt systems only may also use:														
Hazlett HC-2 ball check valve		X		X	X									
Hirt 3/4" NPT solenoid valve		X		X	X									

Executive Order G-70-52-AM
Component[1/] List for Red Jacket, Hirt, or Balance
Phase II Vapor Recovery Systems

Manufacturer/Item and Model Number	SFM ID Number	Exhibits 4	5	6	7	8a	8b	8c	9a	9b	9c	10	11	11a
Swivels[5/]														
Nozzle Swivels														
Emco Wheaton														
A4110-001(45°)	005:007:31		X			X	X		X	X		X		
A4113-001(90°)	005:007:31					X			X					
Husky I+VI	005:021:2	X		X	X									
Husky I+VI F	005:021:2	X		X	X									
OPW 43	005:008:6	X		X	X									
OPW 43-C[6]/ (30°)	005:008:27		X			X	X		X	X		X		
OPW 43-CF-(45°)	005:008:040		X			X	X		X	X		X		
OPW 43-T[6]/ with 3/4" or 1" fuel line	005:008:31	X		X	X									
OPW 43-CR(90°)	005:008:46		X			X			X					
OPW 43-CRT(90°)	005:008:46		X			X			X					
Pomeco Model 7	005:025:2	X		X	X									
RCR 3 D	005:031:002	X		X	X									
Island Swivels														
Emco Wheaton A93-001	005:007:13		X											
OPW 36-CE	005:008:28		X											
Dispenser Swivels														
Emco Wheaton														
A4113-001 (90°)	005:008:31		X			X	X	X	X	X	X	X		
A92-001	005:007:11		X											
Wedgon PS 3445 VRM	005:013:2	X		X										
OPW 43-CR(90°)	005:008:46		X			X	X	X	X	X	X	X		
OPW 43-CRT(90°)	005:008:46		X			X	X	X	X	X	X	X		
Retractor Swivel														
Searle Leather & Packing B-1399 or State Fire Marshal approved equivalent			X											

Executive Order G-70-52-AM
Component[1/] List for Red Jacket, Hirt, or Balance
Phase II Vapor Recovery Systems

Manufacturer/Item and Model Number	SFM ID Number	Exhibits 4	5	6	7	8a	8b	8c	9a	9b	9c	10	11	11a
Flow Limiter														
Emco Wheaton A-10	001:007:1	X	X	X	X	X	X	X	X	X	X	X	X	X
or State Fire Marshal approved equivalent														
Recirculation Traps (Existing installations only) [17/]														
Emco Wheaton A008-001	001:007:4	X	X	X	X									
Emco Wheaton A94-001	005:007:8	X	X	X	X									
Emco Wheaton A95-001	005:007:9	X	X	X	X									
OPW 78, 78-S, 78-E, 78-ES	001:008:13													
	002:008:12	X	X	X	X									

Executive Order G-70-52-AM
Footnotes to Component[1/] List for Red Jacket, Hirt, or Balance
Phase II Vapor Recovery Systems

1/ Specific components for the Red Jacket system are listed in the latest version of Executive Order G-70-14. Specific components for the Hirt system are listed in the latest version of Executive Order G-70-33.

2/ See Exhibit 3 for a Nozzle/System Cross-Reference.

3/ High-hang or high-retractor hose configurations are required on all existing Balance, Red Jacket and Hirt stations by July 26, 1986, except for dispensers in compliance with Exhibit 11.

4/ Other dispensers are in compliance with ARB requirements if they are approved by the Division of Measurement Standards and are applicable to any of the configurations shown by Exhibits 4,5,6, & 7 in this Executive Order.

5/ Other nozzle multiplane swivels and island single plane swivels may be used if approved by California State Fire Marshal. Nozzle multiplane swivels and island single plane swivels are required on all existing twin hose dispensers by July 26, 1986.

6/ 43-T swivel not allowed with Hirt ball check valve.

7/ Dual-port nozzles not permitted on new installations utilizing a balance type Phase II vapor recovery system.

8/ Boot protectors are prohibited on Emco Wheaton A4000-series nozzles, EZ-flo 4000-series and 11V-series nozzles and OPW 111V and Husky Model V nozzles.

9/ Specific components for EZ-flo rebuilt 3000-series vapor recovery nozzles are listed in the latest version of Executive Order G-70-101. Specific components for EZ-flo rebuilt A4000-series and 11V-series vapor recovery nozzles are listed in the latest version of Executive Order G-70-134.

10/ Specific components for the EZ-flo Rebuilt OPW 7V-E vapor recovery nozzle are listed in the latest version of Executive Order G-70-78.

11/ Specific components for the Rainbow Rebuilt Emco Wheaton A3003, A3005, A3006, and A3007 vapor recovery nozzles are listed in the latest version of Executive Order G-70-107.

12/ Emco Wheaton red and gray bellows for A3000-type nozzles may not be used after July 26, 1989. (Bellows discolor in use and may appear tan rather than red or gray.)

13/ The boot must be used with Daystar Spacer (Daystar part number F00232-NL-00), and is only approved for use on Emco Wheaton 3003- and 3005-type nozzles.

14/ Appropriate certified swivels must be used to prevent closure of vapor passage due to kinking.

15/ Use of Rainbow Petroleum Products RA3003/RA3005 Blow Molded Gasoline Vapor Recovery Bellows approved.

16/ Coaxial hose assemblies which do not contain liquid removal systems may be used on Exhibits which are not indicated provided they are used with a certified liquid removal system (such as the Gilbarco Co-Vent) which is certified for that Exhibit.

Executive Order G-70-52-AM
Footnotes to Component[1/] List for Red Jacket, Hirt, or Balance
Phase II Vapor Recovery Systems

17/ Recirculation traps are permitted on existing installations only. Removal of internal assembly from existing recirculation traps is recommended whenever possible to reduce pressure drop.

18/ Any installation of blended product dispensers must be plumbed to allow the return of vapors from any product produced by blending to all tanks from which the component fuels may be withdrawn.

19/ The Emco Wheaton A227 vapor check valve may be installed in a vertical position (manufacturer's instructions specify installation within five degrees of horizontal) in Tokheim 262 dispensers manufactured before 1/1/90.

20/ Installation of the Catlow 2.N.1 breakaway at the nozzle end of the hose is prohibited.

21/ The Emco Wheaton A4042 fitting is to be marketed in combination with a gray scuff guard which clearly identifies it as an A4042 fitting. This gray scuff guard is not to be installed on A227 vapor check valves, and the use of the black scuff guard with which the A227 valve is marketed is prohibited with the A4042. Emco Wheaton A227 valves modified by removing poppets in an attempt to create A4042 fittings are considered uncertified equipment.

22/ Coaxial hoses with liquid removal systems are approved as indicated for Exhibits which require liquid removal systems. The use of hoses containing liquid removal systems is not prohibited on other Exhibits provided all requirements of the Exhibits, including hose loop specifications, are met.

Exhibit 3
Executive Order G-70-52-AM

Phase II Vapor Recovery System/Nozzle Cross-Reference
(Red Jacket and Hirt Assist Systems or Balance Systems)

Nozzle 1/	Dispensing Rate Systems Using Nozzles 2/	GPM Not To Exceed	Comments and Exhibit 2 Cross-Reference Number	
Emco Wheaton A3003, RA3003 EZ-flo 3003 Rainbow RA3003	Hirt Balance	10 3/ 10	Soft, tight-fitting faceplate Insertion interlock Dual-hose passageways Secondary (pressure) shutoff mechanism 4/ Vapor check valve in nozzle	[1]
Emco Wheaton A3005, RA3005 EZ-flo 3005 Rainbow RA3005	Hirt Balance	10 10	Same as A3003 except coaxial Insertion interlock Soft, tight-fitting faceplate Secondary (pressure) shutoff mechanism 4/ Vapor check valve in nozzle.	[2]
Emco Wheaton A3006, RA3006 EZ-flo 3006 Rainbow RA3006	Hirt Red Jacket	10 3/ 10	Loose-fitting assist-type facecone. No insertion interlock. Secondary (pressure) shutoff mechanism 4/ Slim handle. Dual-hose passageways Remote vapor check valve required.	[3]
Emco Wheaton A3007, RA3007 EZ-flo 3007 Rainbow RA3007	Hirt Red Jacket	10	Same as A3006 except coaxial passageways Loose-fitting assist-type facecone Secondary (pressure) shutoff mechanism 4/ Remote vapor check valve required.	[4]
Emco Wheaton A4000 5/ RA4000 5/ EZ-flo 4000 5/ 7/	Hirt Balance	10 3/ 10	Soft, tight-fitting faceplate Insertion interlock Secondary (pressure) shutoff mechanism 4/ Remote vapor check valve required Dual-hose passageways	[5]
Emco Wheaton A4001 5/ RA4001 5/ EZ-flo 4001 5/	Hirt Balance	10 10	Same as A4000 except coaxial. Insertion interlock. Soft, tight-fitting faceplate. Secondary (pressure) shutoff mechanism 4/ Remote vapor check valve required	[6]

Exhibit 3 (continued)
Executive Order G-70-52-AM

Phase II Vapor Recovery System/Nozzle Cross-Reference
(Red Jacket and Hirt Assist Systems or Balance Systems)

Nozzle 1/	Dispensing Rate Systems Using Nozzles 2/	GPM Not To Exceed	Comments and Exhibit 2 Cross-Reference Number	
Emco Wheaton A4002 5/ 7/ EZ-flo 4002 5/	Hirt	10 3/	Loose-fitting assist-type facecone. No insertion interlock. Secondary (pressure) shutoff mechanism 4/ Dual-hose passageways Remote vapor check valve required.	[7]
Emco Wheaton A4003 5/ EZ-flo 4003 5/ 7/	Hirt	10	Same as A4002 except coaxial passageways Loose-fitting assist-type facecone Secondary (pressure) shutoff mechanism 4/ Remote vapor check valve required.	[8]
Emco Wheaton A4005 5/ RA4005 5/ EZ-flo 4005 5/ 7/	Hirt Balance	10 10	Vapor check valve in nozzle. Insertion interlock. Soft, tight-fitting faceplate. Secondary (pressure) shutoff mechanism 4/ Coaxial passageways	[9]
OPW 7V Model E 6/ -34 (unleaded, with clip) -36 (leaded, w/out clip) -47 (unleaded, with clip) -49 (unleaded, w/out clip -60 (leaded, with clip) -61 (unleaded, with clip) -62 (leaded, w/out clip) -63 (unleaded, w/out clip)	Hirt Red Jacket	10 3/ 10	No insertion interlock. Loose-fitting assist-type facecone. Remote vapor check valve required. Dual passageways No new 7V nozzles being made by OPW. Secondary (pressure) shutoff mechanism 4	[10]
E-Z Flo EZE8 -34 (leaded, with clip) -36 (leaded, w/out clip) -47 (unleaded, with clip) -49 (unleaded, w/out clip)	Hirt Red Jacket	10 3/ 10	Rebuilt OPW 7V Model E nozzle. Loose-fitting assist-type facecone. No interlock, dual passageways. Remote vapor check valve required. Secondary (pressure) shutoff mechanism 4	[10a]
Rainbow Petroleum Products RPP-34 (leaded, w/ clip) RPP-36 (leaded, w/out clip) RPP-47 (unleaded, with clip) RPP-49 (unleaded, w/out clip)	Hirt Red Jacket	10 3/ 10	OPW 7V Model E nozzle with Rainbow boot. No insertion interlock. Secondary (pressure) shutoff mechanism 4/ Loose-fitting assist-type facecone. Remote vapor check valve required.	[10b]

Exhibit 3 (continued)
Executive Order G-70-52-AM

Phase II Vapor Recovery System/Nozzle Cross-Reference
(Red Jacket and Hirt Assist Systems or Balance Systems)

Nozzle 1/	Dispensing Rate Systems Using Nozzles 2/	GPM Not To Exceed	Comments and Exhibit 2 Cross-Reference Number	
OPW 11V Model C -22 (leaded, with clip) -24 (leaded, w/out clip) -47 (unleaded, with clip) -49 (unleaded, w/o clip)	Hirt Balance	10 10	Coaxial passageways. Insertion interlock. Soft, tight-fitting faceplate Secondary (pressure) shutoff mechanism 4/ Vapor check valve in nozzle No new Model C nozzles being made by OPW	|11|
OPW 11VS Model C -22 (leaded, with clip) -24 (leaded, w/out clip) -47 (unleaded, with clip) -49 (unleaded, w/o clip)	Hirt Balance	10 3/ 10	Same as 11V except dual passageways. Insertion interlock. Soft, tight-fitting faceplate. Secondary (pressure) shutoff mechanism 4/ Vapor check valve in nozzle No new Model C nozzles being made by OPW.	|12|
OPW 11V Model E -34 (leaded, with clip) -36 (leaded, w/out clip) -47 (unleaded, with clip) -49 (unleaded, w/out clip) EZ-flo 11V-E (coaxial) 5/	Hirt Red Jacket	10 10	Coaxial passageways. Loose fitting assist-type facecone. No insertion interlock. Remote vapor check valve required. Secondary (pressure) shutoff mechanism 4/	|13|
OPW 11VS Model E 5/ -34 (leaded, with clip) -36 (leaded, w/out clip) -47 (unleaded, with clip) -49 (unleaded w/out clip) EZ-flo 11V-E (dual) 5/	Hirt Red Jacket/	10 3/ 10	Same as 11V E except dual passageways. Loose fitting assist-type facecone. No insertion interlock. Remote vapor check valve required. Secondary (pressure) shutoff mechanism 4/	|14|
OPW 11V Model F -22 (leaded, with clip) -24 (leaded, w/out clip) -47 (unleaded, with clip) -49 (unleaded, without clip) EZ-flo 11V-F (coaxial) 5/	Hirt Balance	10 10	Vapor check valve in nozzle. Insertion interlock. Secondary (pressure) shutoff mechanism 4/ Soft, tight-fitting faceplate. Coaxial passageways.	|15|

Exhibit 3 (continued)
Executive Order G-70-52-AM

Phase II Vapor Recovery System/Nozzle Cross-Reference
(Red Jacket and Hirt Assist Systems or Balance Systems)

Nozzle 1/	Dispensing Rate Systems Using Nozzles 2/	GPM Not To Exceed	Comments and Exhibit 2 Cross-Reference Number	
OPW 11VS Model F -22 (leaded, with clip) -24 (leaded, w/out clip) -47 (unleaded, w/ clip) -49 (unleaded, w/o clip) EZ-flo 11V-F (dual) 5/	Hirt Balance	10 3/ 10	Same as 11V F except dual passageways. Vapor check valve in nozzle. Secondary (pressure) shutoff mechanism 4/ Insertion interlock. Soft, tight-fitting faceplate.	|16|
OPW 111V 5/ -22 (leaded, with clip) -24 (leaded, w/out clip) -47 (unleaded, with clip) -49 (unleaded, without clip)	Hirt Balance	10 10	Vapor check valve in nozzle. Insertion interlock. Secondary (pressure) shutoff mechanism 4/ Soft, tight-fitting faceplate. Coaxial passageways.	|17|
Husky Model V 5/	Hirt Balance	10 10	Vapor check valve in nozzle. Insertion interlock. Secondary (pressure) shutoff mechanism 4/ Soft, tight-fitting faceplate. Coaxial passageways.	|18|

1/ Spout and bellows may be changed from leaded to unleaded, or vice versa, when products in storage tanks are changed accordingly.

2/ The Executive Orders pertaining to Balance Phase II vapor recovery systems are listed in Exhibit 1.

3/ Flow rate of 12 gpm permitted only on dual Hirt systems which use 3/4" vapor hose.

4/ Secondary (pressure) shutoff mechanism at or below 10" water column (between 6" and 10", not over 10").

5/ Boot protectors are prohibited on Emco Wheaton A4000-series nozzles, EZ-flo 4000-series and 11V-series nozzles and OPW 111V and Husky Model V nozzles.

6/ OPW 7V Model E nozzle with OPW 7V Model H bellows/faceplate is acceptable.

7/ EZ-flo rebuilt nozzle bodies may be certified only with Emco Wheaton "front end" parts. Refer to the latest version of Executive Order G-70-134 for a listing of the approved combinations.

EXHIBIT 4
Executive Order G-70-52-AM

Dual Hose Side Mount High-Retractor Configuration
For Existing Installations Only

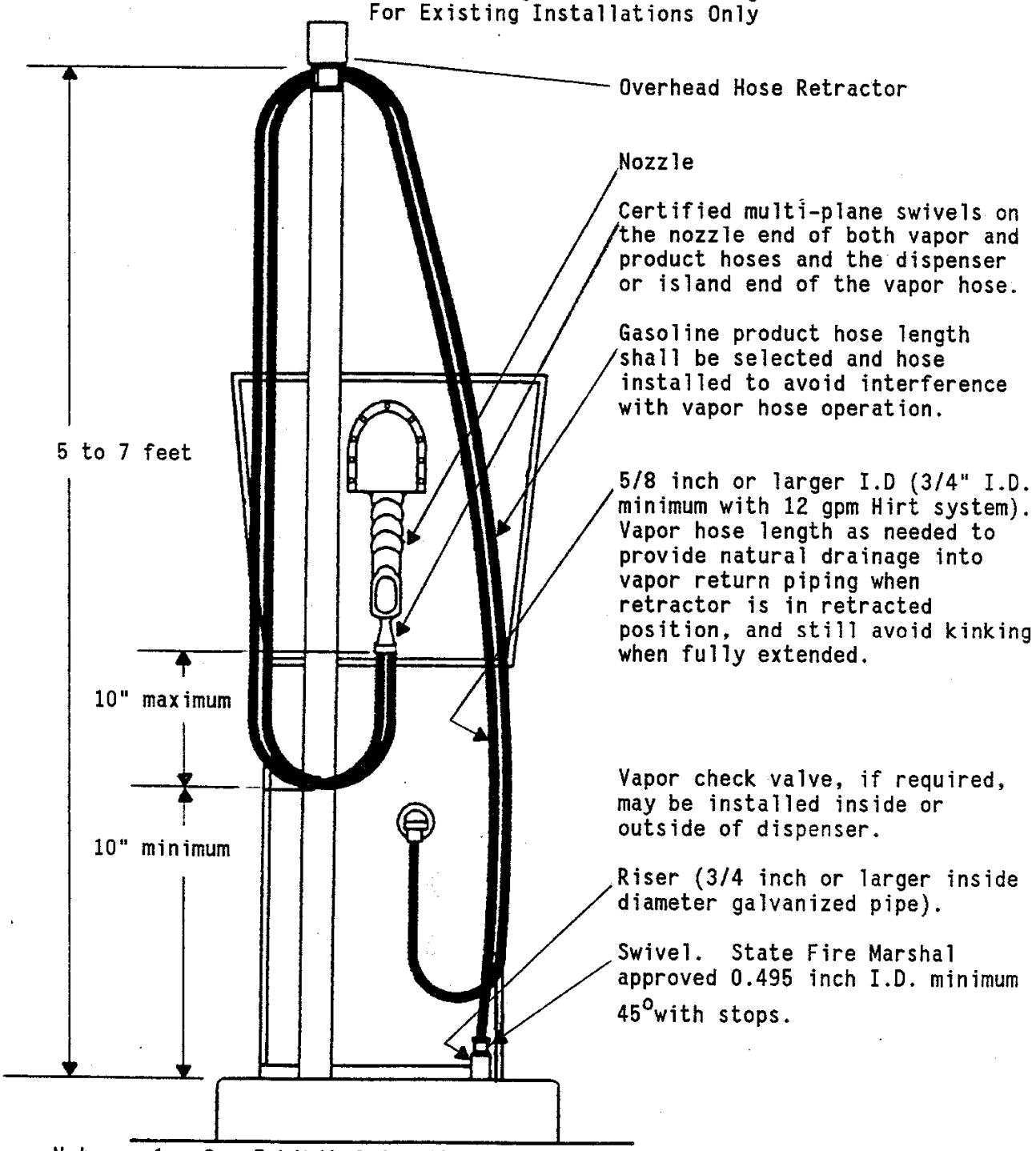

Notes:
1. See Exhibit 2 for the component list.
2. A flow limiter is required on dispensers that have a maximum flowrate in excess of 10 gpm. (A maximum flow rate of 12 gpm is permitted with the Hirt system <u>provided</u> vapor hoses are 3/4" ID.)
3. Use appropriate hose ties.
4. Vapor return piping may be installed on the inside or the outside of the dispenser cabinet.
5. The Emco Wheaton and EZ-flo A4000 and A4002 nozzles are permitted only when used in conjunction with certified vapor check valves.

EXHIBIT 5
Executive Order G-70-52-AM
Coaxial Hose Side-Mount High-Retractor Configuration
For New and Existing Installations

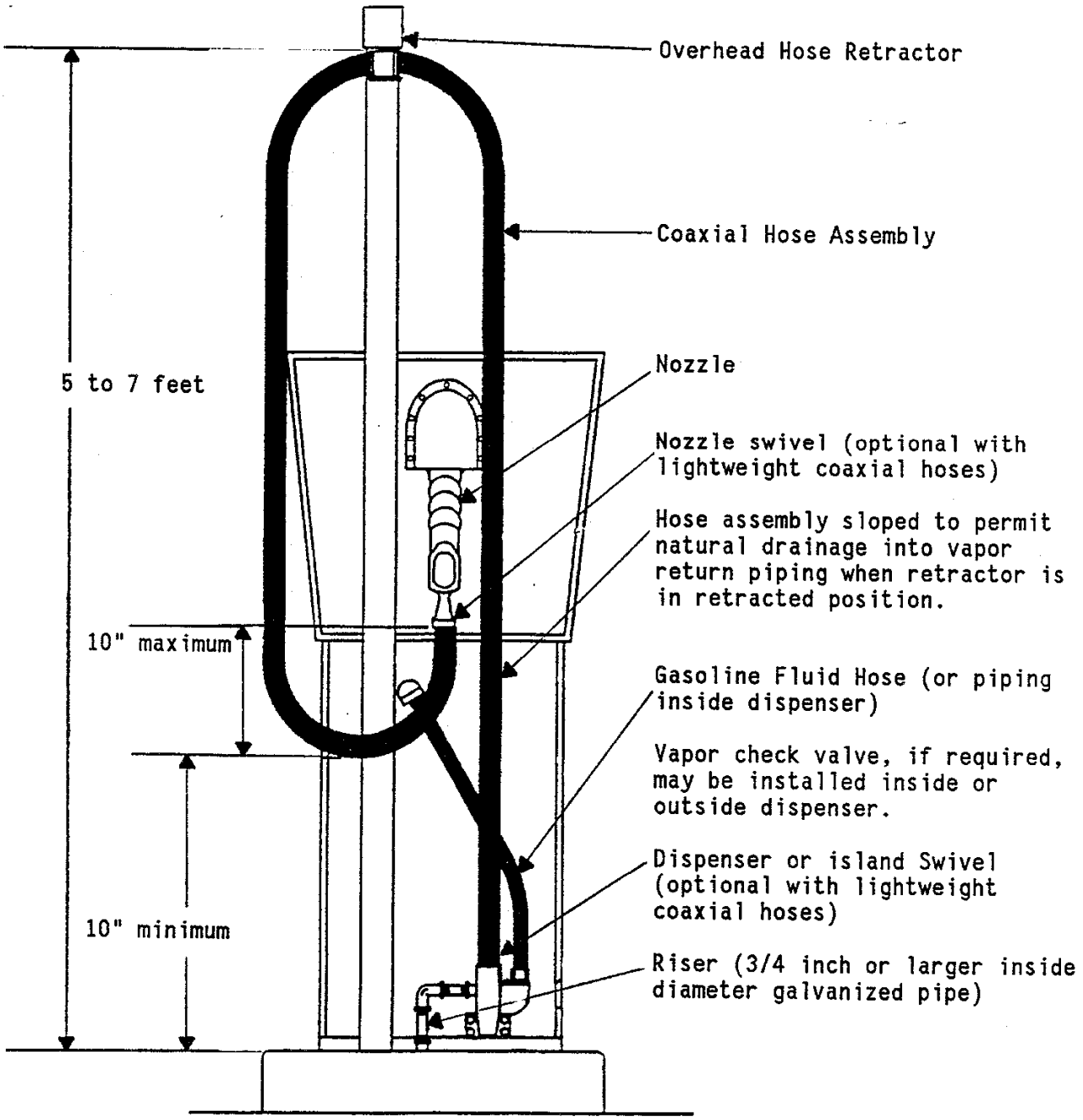

Notes:
1. See Exhibit 2 for the component list.
2. A flow limiter is required on dispensers that have a maximum flowrate in excess of 10 gpm. A flow limiter may be required on all gasoline dispensers at the option of the local air pollution control district.
3. Vapor return piping may be installed on the inside or on the outside of the dispenser cabinet.
4. The Emco Wheaton and EZ-flo A4001 and A4003 nozzles are permitted only when used in conjunction with approved vapor check valves.
5. Nozzle and dispenser or island swivels are required with hardwall coaxial hoses, and are optional with lightweight coaxial hoses.

EXHIBIT 6
Executive Order G-70-52-AM
Dual and Coaxial Hose Dispenser-Mount High-Retractor Configuration

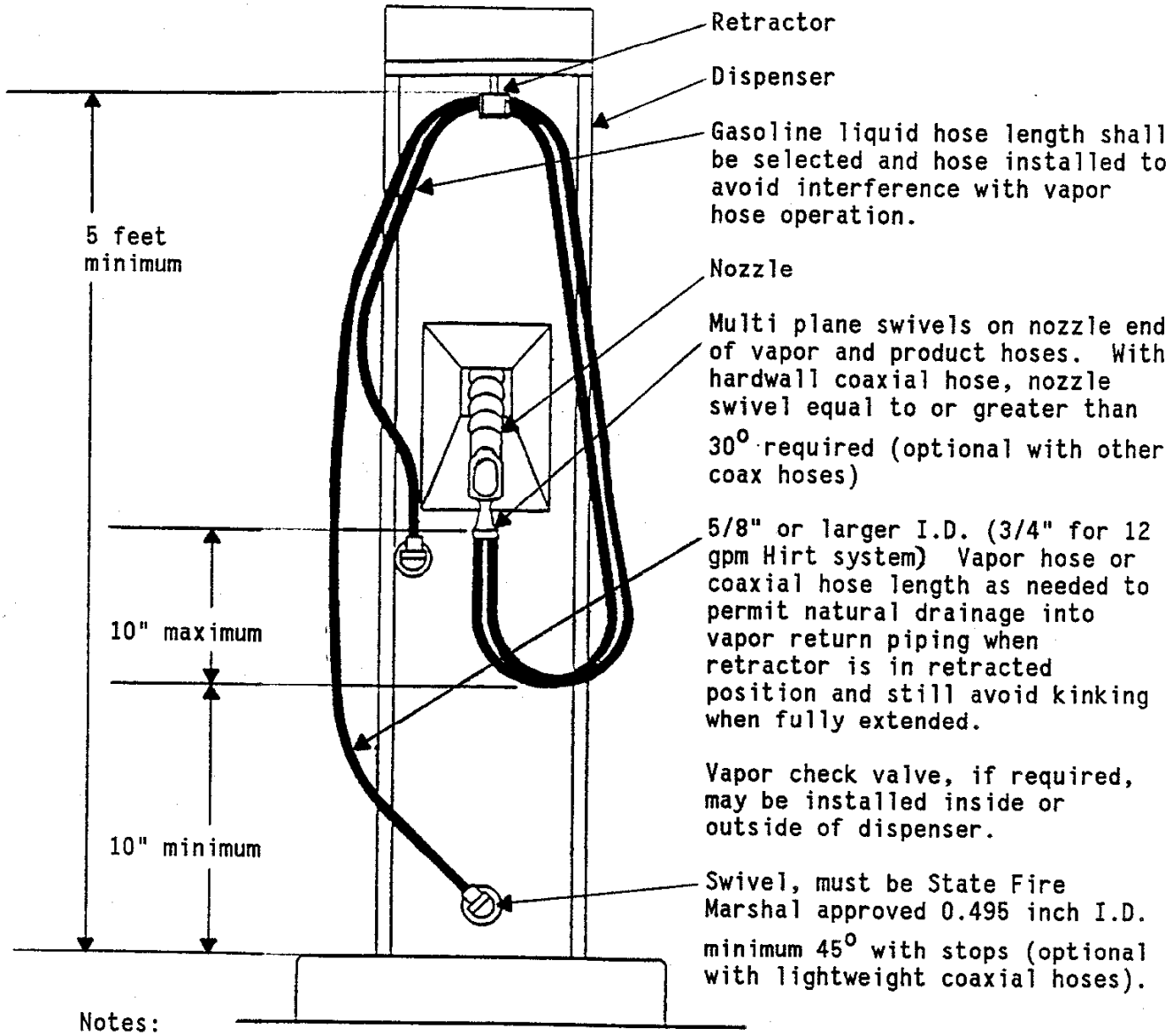

Notes:

1. See Exhibit 2 for the component list.
2. A flow limiter is required on dispensers that have a maximum flowrate in excess of 10 gpm (12 gpm for dispensers with the Hirt system provided that 3/4" ID vapor hoses are used), and may be required on any gasoline dispenser at the discretion of the local air pollution control district.
3. Use appropriate hose ties.
4. Vapor return piping may be installed inside or outside dispenser cabinet.
5. Riser shall be 3/4 inch or larger inside diameter galvanized pipe.
6. The Emco Wheaton and EZ-flo A4000, A4001, A4002 and A4003 nozzles are permitted only when used in conjunction with approved vapor check valves.
7. The coaxial hose dispenser-mount high-retractor configuration can be used for all new and existing installations. The dual hose dispenser-mount high-retractor configuration may not be used for new installations.
8. Nozzle and dispenser swivels are required with dual hoses and with hardwall coaxial hoses, and are optional with lightweight coaxial hoses.

EXHIBIT 7
Executive Order G-70-52-AM
Dual Hose Dispenser-Mount High-Retractor Configuration
For Existing Installations Only

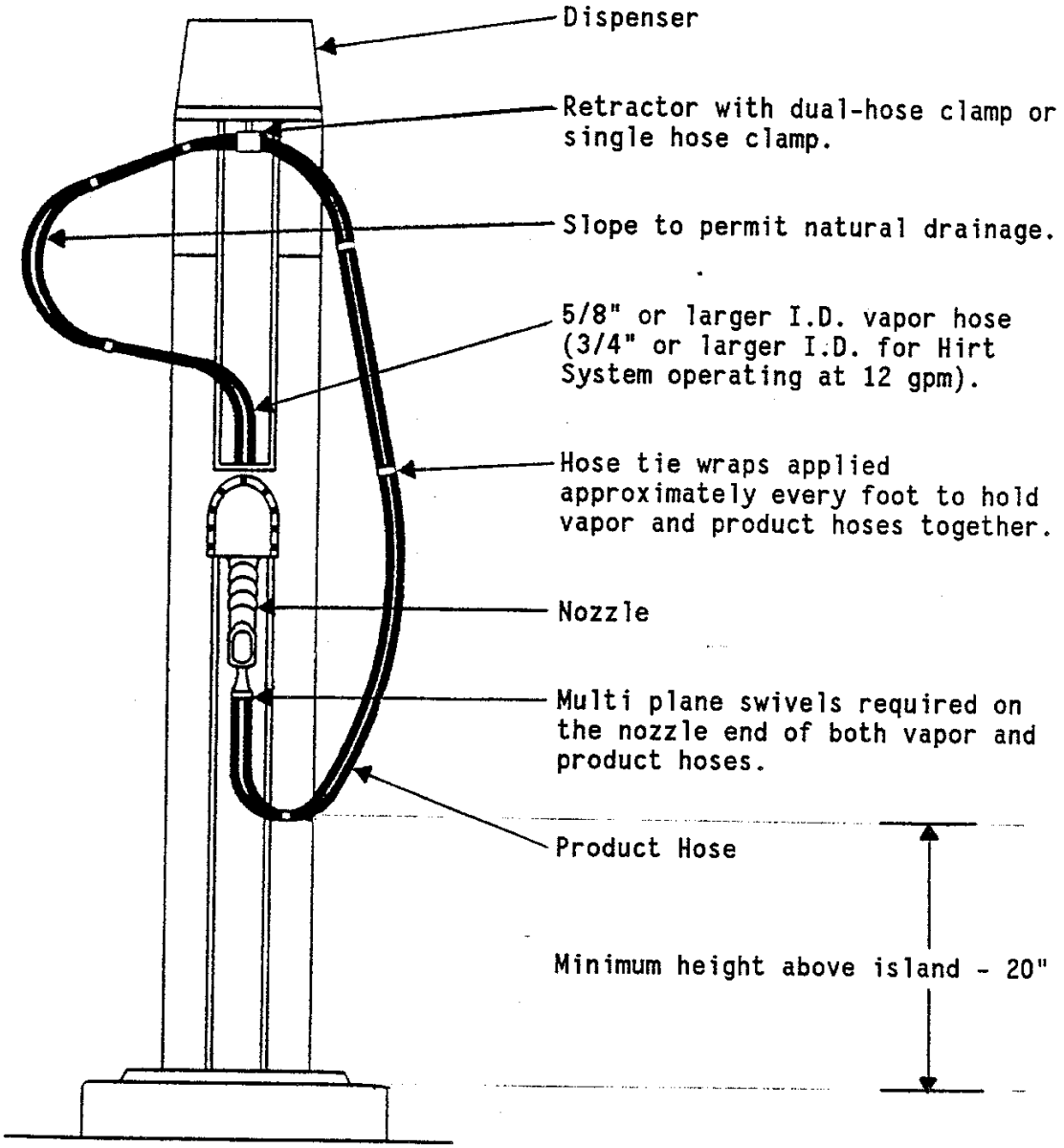

Notes:
1. See Exhibit 2 for the component list.
2. A flow limiter is required on dispensers that have a maximum flowrate in excess of 10 gpm (12 gpm for dispensers for the Hirt System).
3. Hose swivels not required at dispenser end of hoses.
4. Riser must be 3/4 inch or larger inside diameter galvanized pipe.
5. Dual hose dispenser-mount high-retractor configuration not permitted on new installations.
6. The Emco Wheaton and EZ-flo A4000 and A4002 nozzles are permitted only when used in conjunction with certified vapor check valves.

EXHIBIT 8
Executive Order G-70-52-AM
High-Retractor Dispenser - Coaxial Hose Configurations
For New and Existing Installations

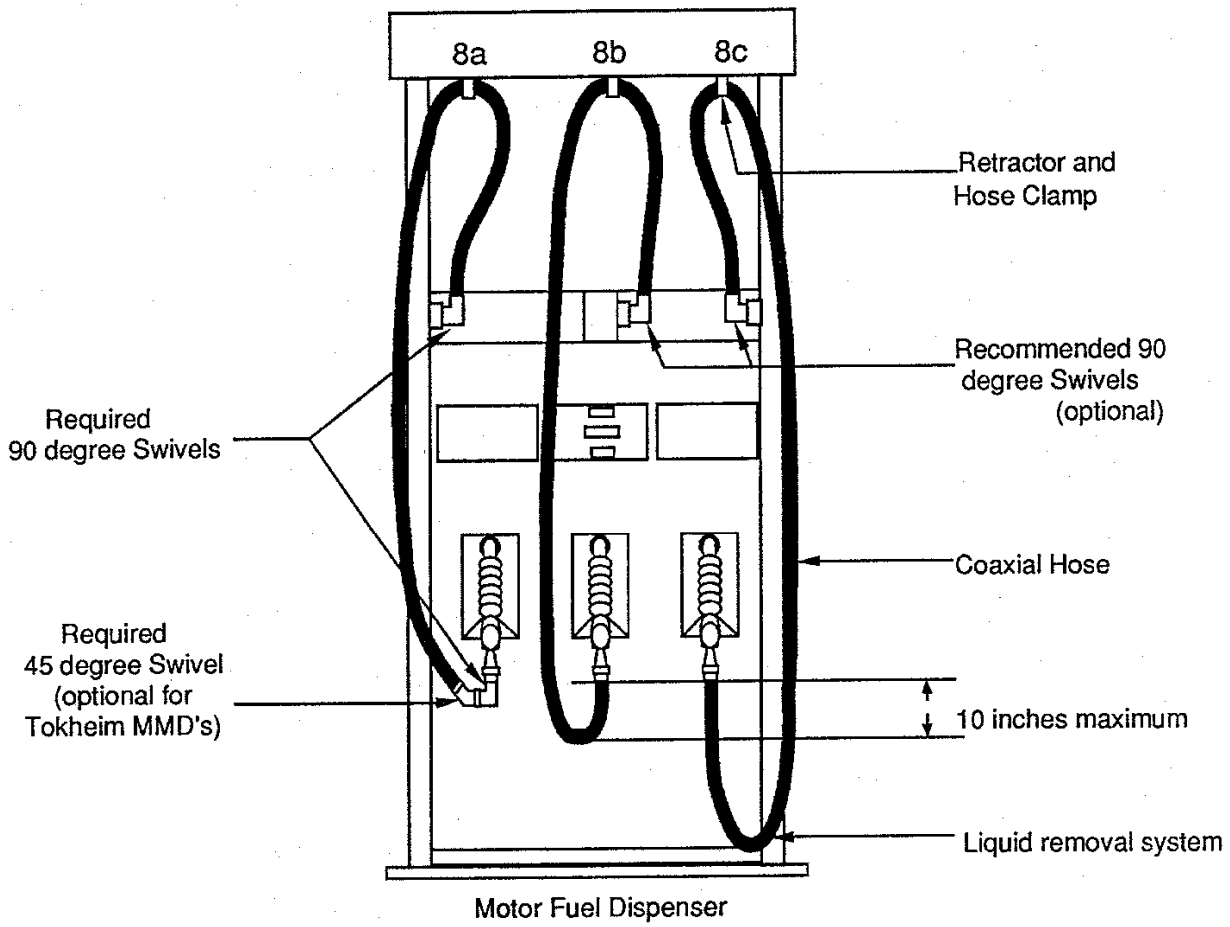

Notes:

1. Use a 1 inch or larger diameter galvanized pipe for riser.
2. A flow limiter is required on dispensers that have a maximum flowrate in excess of 10 gpm. A flow limiter may be required on any gasoline dispenser at the option of the local air pollution control district. Flow limiters are not recommended for configurations requiring liquid removal systems if flowrates are10 gpm or less for all nozzles.
3. For configuration 8a only, the maximum length of the hose assembly is 9 feet. For dispenser islands greater than 4 feet in width, the maximum length of the hose assembly shall not exceed the sum of one-half the dispenser width, in feet, plus 7 feet.
4. Retractor must retract coaxial hose to top of dispensers when not in use and hose must slope downward to dispenser to provide natural drainage from the retractor to the dispenser. Tension on retractor hose clamp must not be in excess of that required to return hose to top of dispenser.
5. For configuration 8c, the hose may not touch the island or the ground when not in use. In the case of a dogbone island where the wider ends protect the hose from damage by vehicle tires, the hose may touch the vertical face of the dogbone island at the option of the local air pollution control district.
6. The Emco Wheaton and EZ-flo A4001 and A4003 nozzles are permitted only when used in conjunction with approved vapor check valves.
7. Configuration 8a with swivels is required with hardwall coaxial hoses.
8. Liquid removal system is required with configuration 8c and shall be located so that the liquid pickup is in the bottom of the hose loop during vehicle fuelings.

Exhibit 9 (a and b)
Executive Order G-70-52-AM
High-Hang Coaxial Hose Configuration with Retractor
For New and Existing Installations

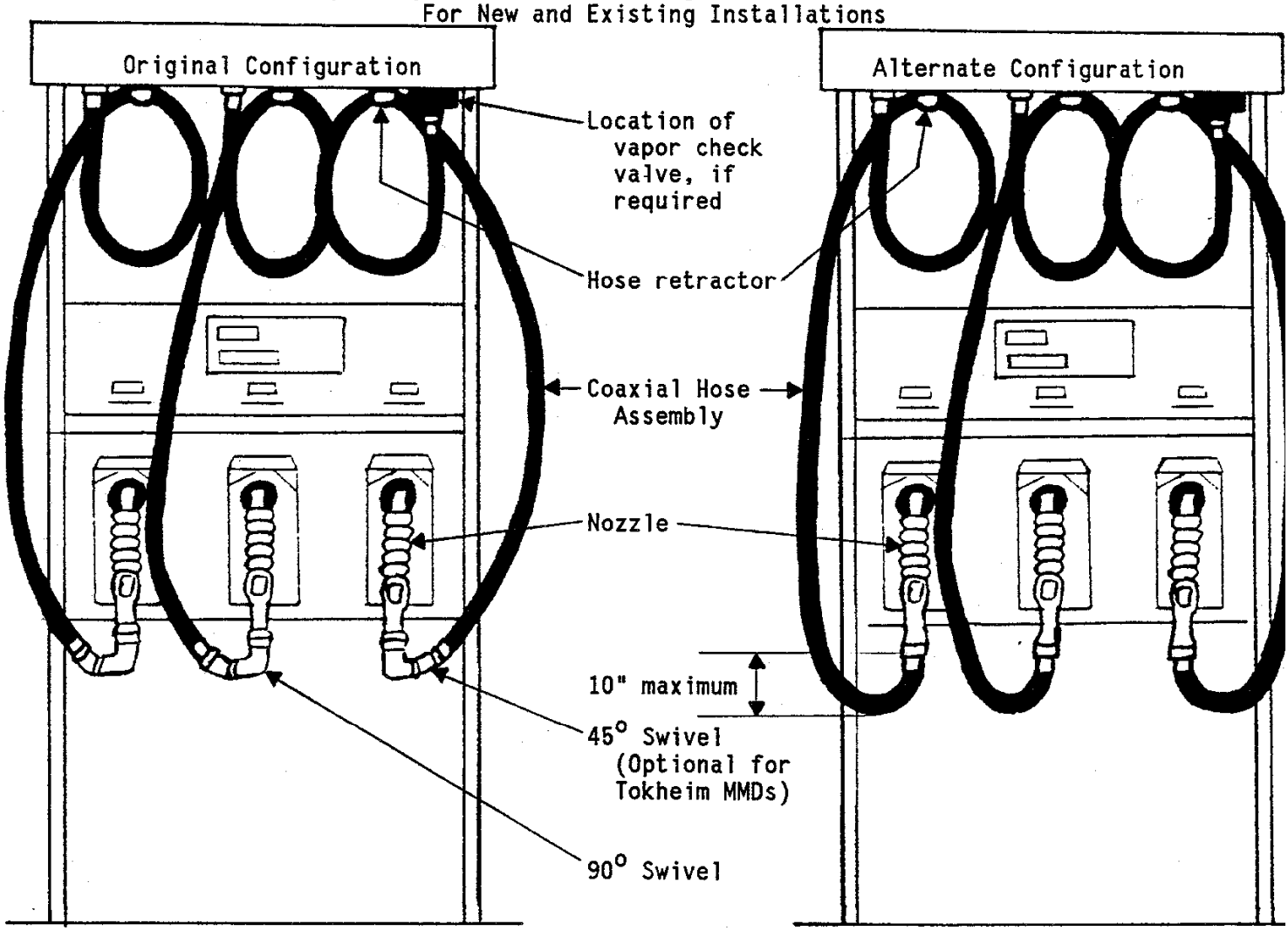

Notes:
1. Use a 1 inch or larger inside diameter galvanized pipe for riser.
2. A flow limiter is required on dispensers that have a maximum flowrate in excess of 10 gpm. A flow limiter may be required on all gasoline dispensers at the option of the local air pollution control district.
3. For dispenser islands less than 4 feet in width, the maximum length of the hose assembly is 9-1/2 feet. For dispenser islands greater than 4 feet in width, the maximum length of the hose assembly shall not exceed the sum of one-half the dispenser island width, in feet, plus 7-1/2 feet.
4. Retractor must retract coaxial hose to top of dispensers when not in use.
5. Tension on retractor hose clamp must not be in excess of that required to return hose to top of dispenser.
6. Original configuration required with hardwall hoses.
7. 90 degree swivel is not required if hose stiffener at nozzle is 24" in length (Hose stiffeners pertain only to B.F. Goodrich hoses).
8. The Emco Wheaton and EZ-flo A4001 and A4003 nozzles are permitted only when used in conjunction with approved vapor check valves.

Exhibit 9c
Executive Order G-70-52-AM
High-Hang Coaxial Hose Configuration With Liquid Removal System
For New and Existing Installations

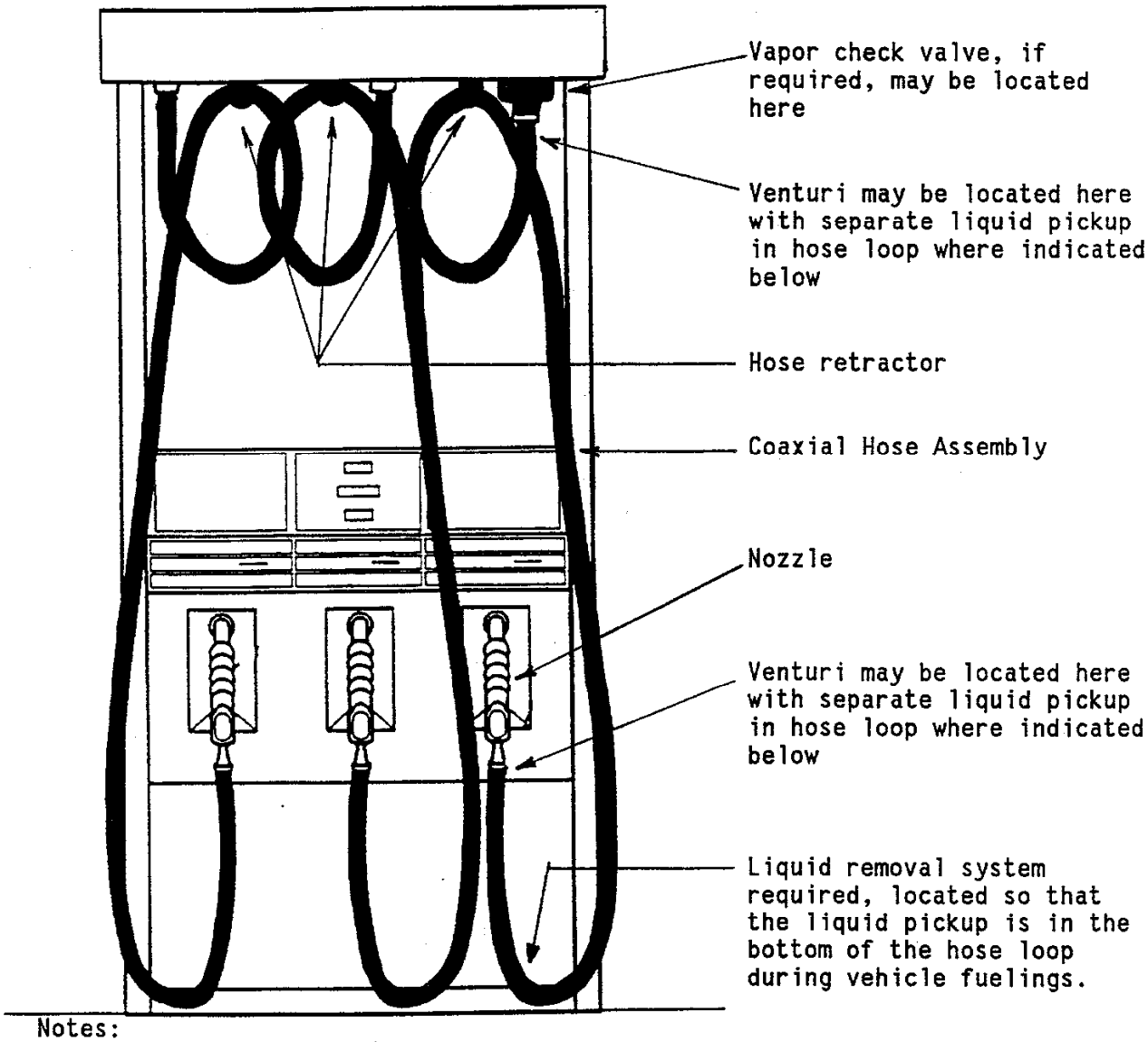

Notes:

1. Use 1 inch or larger inside diameter galvanized pipe for riser.
2. The maximum length of the hose assembly, including any breakaway valve, vapor check valve or pigtail hose, shall not exceed 13 feet.
3. An ARB certified liquid removal system must be installed and maintained according to the manufacturer's current specifications.
4. A flow limiter is required on all dispensers that have a maximum flowrate in excess of 10 gpm. A flow limiter may be required on all gasoline dispensers at the option of the local air pollution control district.
5. The Emco Wheaton and EZ-flo A4001 and A4003 nozzles are permitted only when used in conjunction with approved vapor check valves.
6. The hose may not touch the island or the ground when not in use. In the case of a dogbone island where the wider island ends protect the hose from damage by vehicle tires, the hose may touch the vertical face of the dogbone island at the option of the local air pollution control district.
7. Retractor must retract coaxial hose to top of dispensers when not in use.
8. Tension on hose clamp must not be in excess of that required to return hose to top of dispenser.

EXHIBIT 10
Executive Order G-70-52-AM
High-Hang Coaxial Hose Configuration With Liquid Removal System
For New and Existing Installations

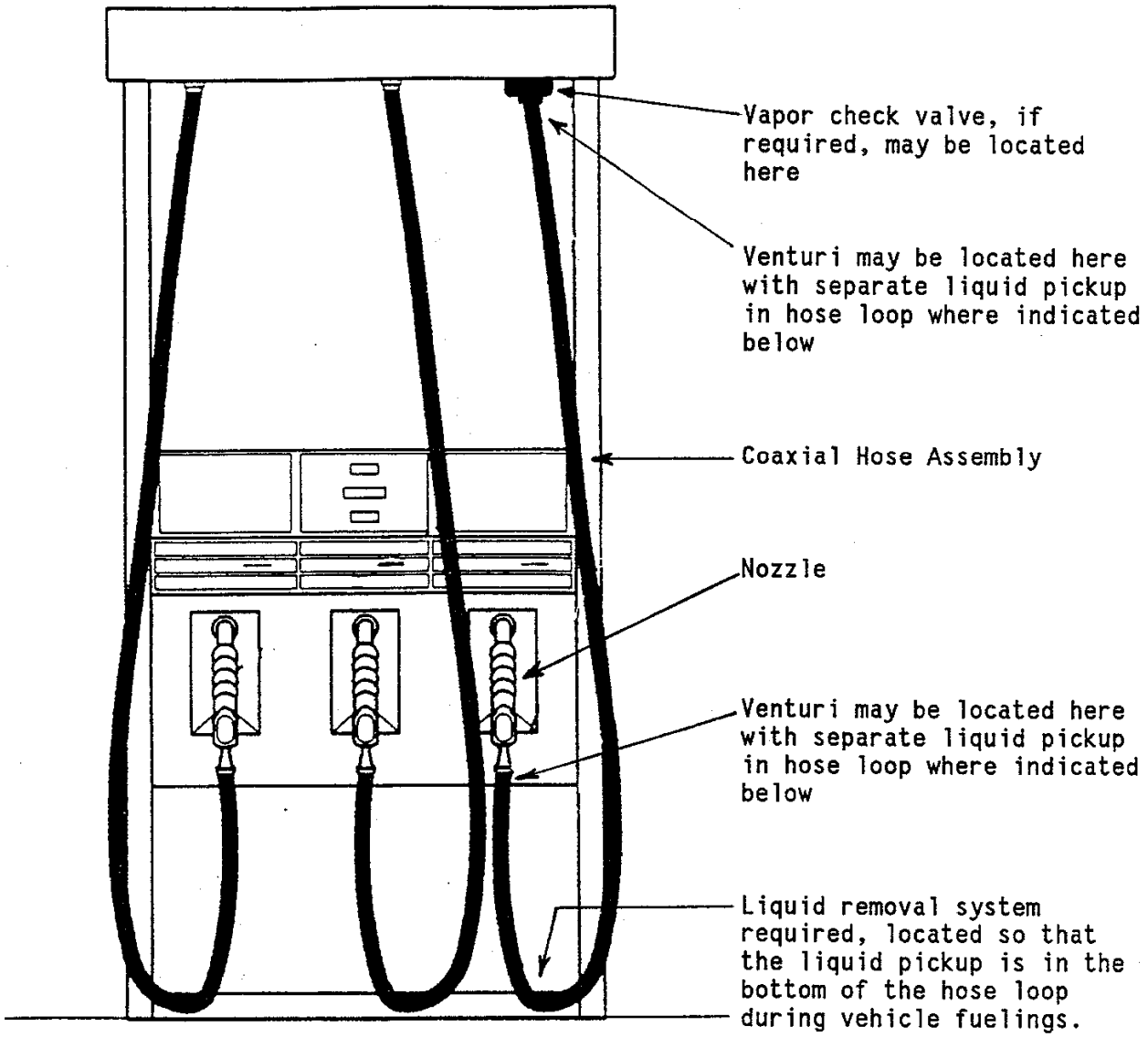

Notes:
1. Use 1 inch or larger inside diameter galvanized pipe for riser.
2. The maximum length of the hose assembly is 10-1/2 feet.
3. An ARB certified liquid removal system must be installed and maintained according to the manufacturer's current specifications.
4. A flow limiter is required on all dispensers that have a maximum flowrate in excess of 10 gpm. A flow limiter may be required on all gasoline dispensers at the option of the local air pollution control district.
5. The Emco Wheaton and EZ-flo A4001 and A4003 nozzles are permitted only when used in conjunction with approved vapor check valves.
6. The hose may not touch the island or the ground when not in use. In the case of a dogbone island where the wider island ends protect the hose from damage by vehicle tires, the hose may touch the vertical face of the dogbone island at the option of the local air pollution control district.

EXHIBIT 11
Executive Order G-70-52-AM
Low-Profile Dispenser with Retractor and Liquid Removal System
For New and Existing Installations

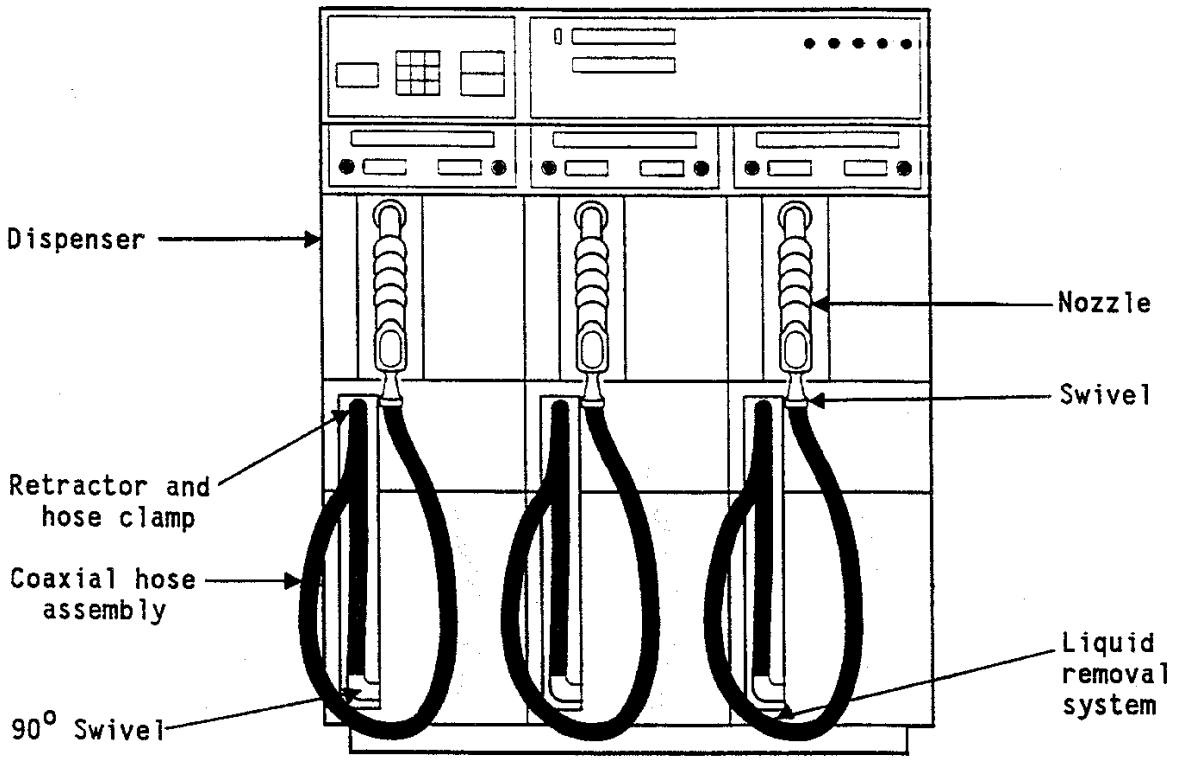

Notes:
1. Use 1 inch or larger inside diameter galvanized pipe for riser.
2. A flow limiter is required on dispensers that have a maximum flowrate in excess of 10 gpm. A flow limiter may be required on all gasoline dispensers at the option of the local air pollution control district.
3. An ARB certified liquid removal system must be installed and maintained according to manufacturer's specifications.
4. Retractor must retract coaxial hose to dispenser when not in use. The hose must fit snugly against the dispenser from the low retractor to the 90° swivel.
5. Tension on retractor hose clamp must not be in excess of that required to return hose to dispenser.
6. The Emco Wheaton and EZ-flo A4001 and A4003 nozzles are permitted only when used in conjunction with approved vapor check valves.
7. The hose may not touch the island or the ground when not in use. In the case of a dogbone island where the wider island ends protect the hose from damage by vehicle tires, the hose may touch the vertical face of the dogbone island at the option of the local air pollution control district.

EXHIBIT 11a
Executive Order G-70-52-AM
Low-Profile Dispenser with Retractors
For New and Existing Installations

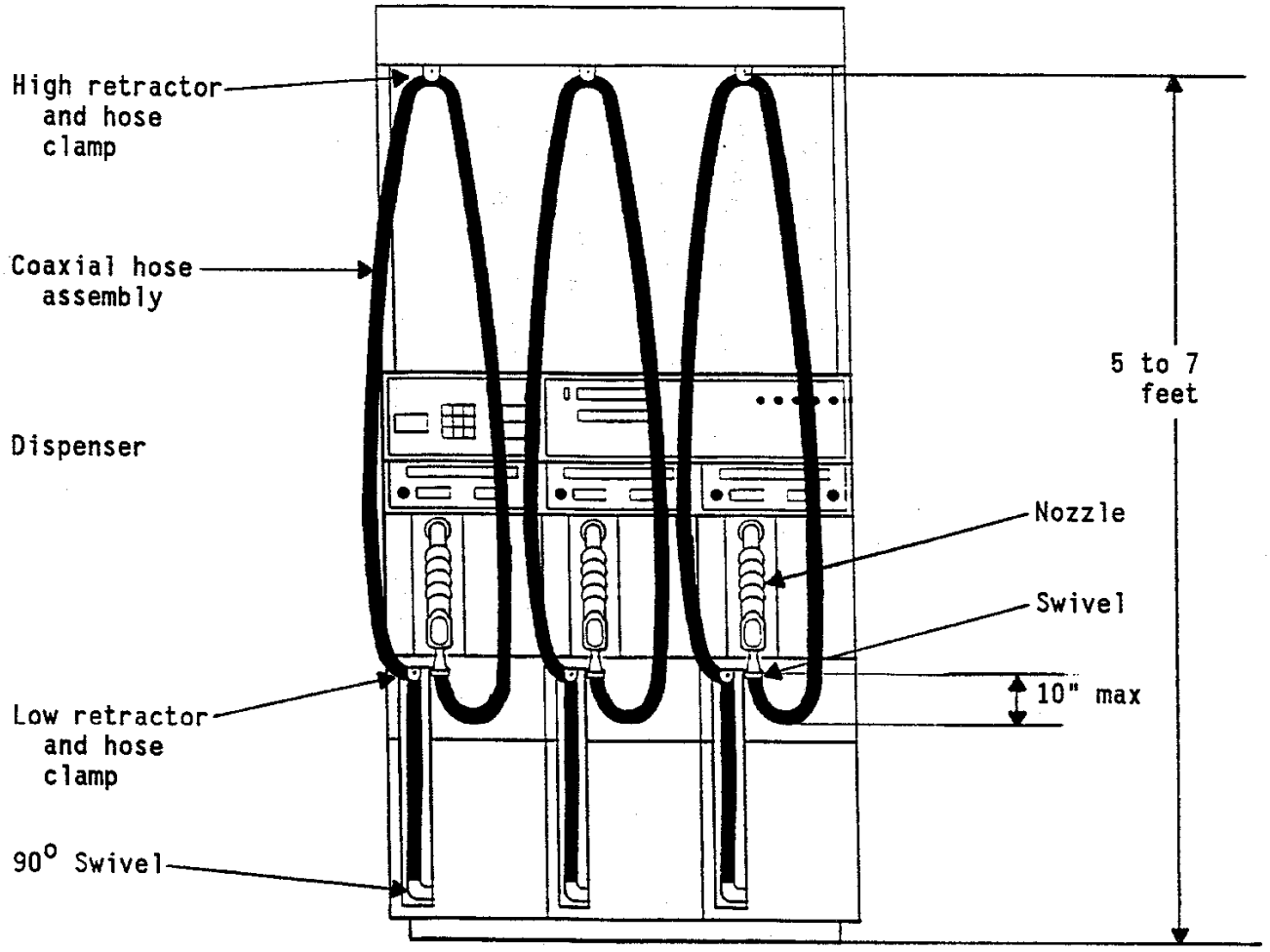

Notes:
1. Use 1 inch or larger inside diameter galvanized pipe for riser.
2. A flow limiter is required on dispensers that have a maximum flowrate in excess of 10 gpm. A flow limiter may be required on all gasoline dispensers at the option of the local air pollution control district.
3. Low retractor must be present and must retract hose to dispenser when not in use. Hose must fit snugly against dispenser from low retractor to 90 degree swivel.
4. High retractor must retract hose fully when hose is not in use and must provide natural drainage from high retractor to the 90° swivel.
5. Tension on retractor hose clamp must not be in excess of that required to return hose to dispenser.
6. The Emco Wheaton and EZ-flo A4001 and A4003 nozzles are permitted only when used in conjunction with approved vapor check valves.