Executive Order G-70-70-AC
Figure 3-E
Healy Vapor Recovery System with Model 100 Jet Pumps
Typical Installation of Dispenser Components With Multi-Product Dispensers

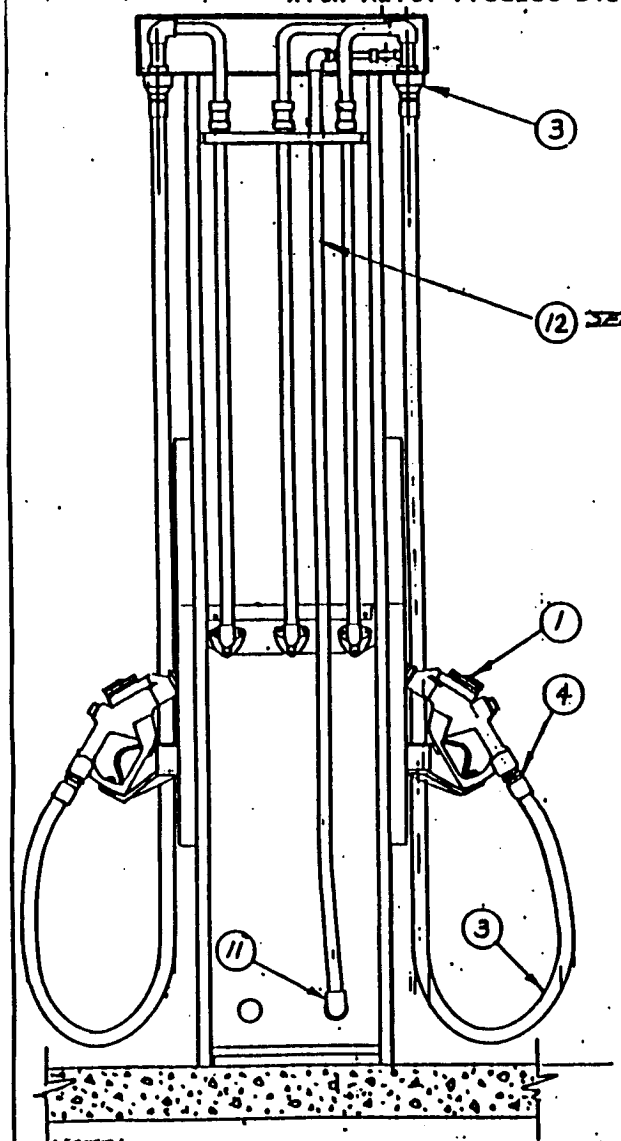

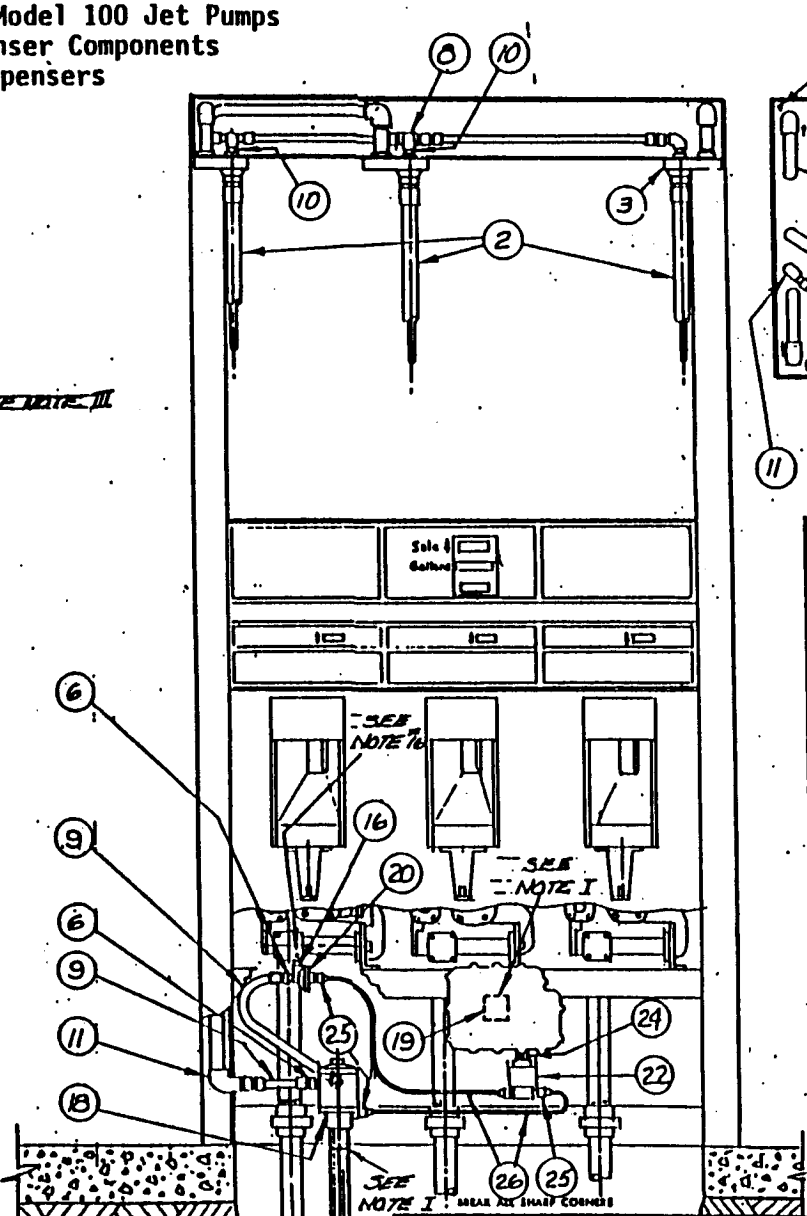

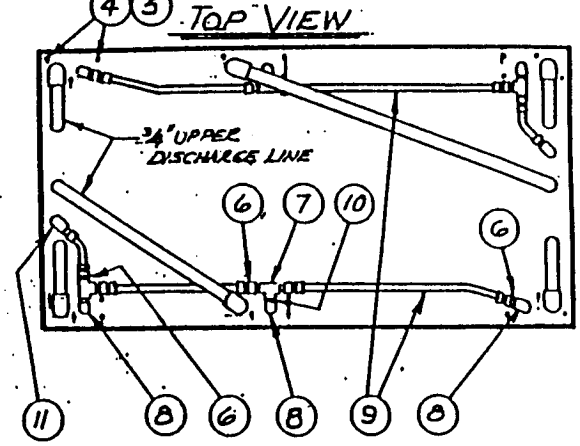

REVISIONS			
SYM	DESCRIPTION	DATE	APPROVAL
D	GEN'L REVISION	5.11.87	JWN
E	REV. FOR GILBARCO	12.1.89	JWN

PARTS LIST

ITEM	QTY	DESCRIPTION	P/N
1	6	NOZZLE	200
2	6	CO-AXIAL HOSE (13 FT MAX)	758
3	6	HOSE ADAPTER	CX6G
4	24	1/4-20 x 5/8 HEX HD BOLT	CX11
5	24	1/4 FLAT WASHER	CX12
6	20	FLARE CONN. (1/2" x 1/8 MPT)	
7	4	1/4" TEE (GALV.)	
8	6	1/4" ELBOW (GALV.)	
9	12 FT	1/2" OD COPPER TUBE	
10	10	1/4 CLOSE NIPPLE	
11	4	1/4 x 1/2 REDUCING ELBOW (GALV.)	
12	SEE NOTE 3	1/2" SCH. 40 ST'L PIPE (GALV.)	
13			
14			
15			
16	2	1/4 x 3 NIPPLE	
17			
18	2	JET PUMP	100
19	2	RELAY	1005
20	2	CONTROL VALVE	143
21			
22	2	SOLENOID VALVE	175
24	2	1/2 x 2 NIPPLE (GALV.)	
25	8	FLARE CONNECTOR (1/4" x 1/8 NPT)	
26	8 FT.	1/4 OD COPPER TUBE	
27			
28			

DO NOT SCALE THIS DRAWING

NOTE:
I - SEE INSTALLATION INSTRUCTION SHEET #182D FOR STEP BY STEP PROCEDURE TO FIELD RETROFIT TYPICAL 6 HOSE MULTI-PRODUCT DISPENSER WITH HEALY SYSTEM USING JET-PUMPS
II - DO NOT KINK COPPER TUBE WHEN BENDING.
III - 1/2" PIPE BY INSTALLER (2 PCS, APPROX 7 FT LONG)

UNLESS OTHERWISE SPECIFIED TOLERANCES ON		
FRACTIONS	DECIMALS	ANGLES
± 1/64	± .005	± 1°

MATERIALS

HEAT TREATMENT

FINAL PROTECTIVE FINISH

ORIGINAL ISSUE DATE
DWN JWN DATE 12-2-88
CHKD DATE
APPD DATE
SUBMITTED
C.E. INC.
CLIENT

HEALY SYSTEM INSTALLATION

MULTI-PROD. DISPENSER

CAMBRIDGE ENGINEERING, INC.

DWG SIZE C | 7810-182

SCALE None | REQ'D. | CODE | SHEET 1 OF 2