Executive Order G-70-70-AC

Figure 4-A

Healy Vapor Recovery System with Central Vacuum Unit
Typical Vapor Return Piping Configuration
With Standard or Multi-Product Dispensers

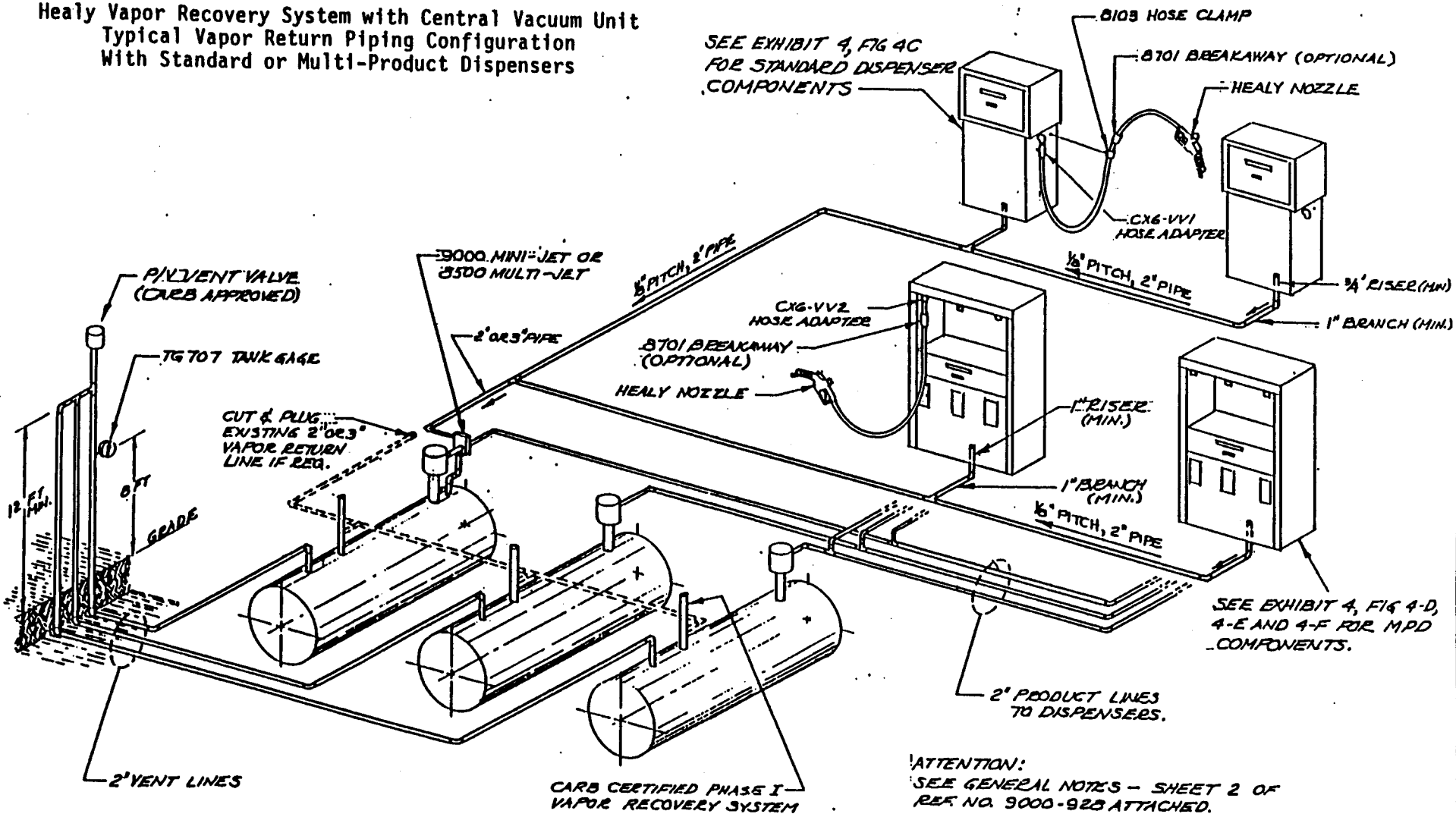

ATTENTION:
SEE GENERAL NOTES – SHEET 2 OF REF. NO. 9000-928 ATTACHED.

REVISIONS			
SYM	DESCRIPTION	DATE	APPROVAL
A	ORIG. ISSUE	4-13-92	JWH

BREAK ALL SHARP CORNERS — DO NOT SCALE THIS DRAWING

UNLESS OTHERWISE SPECIFIED TOLERANCES ON FRACTIONS ± 1/64 DECIMALS ± .005 ANGLES ± 1°

MATERIALS

HEAT TREATMENT

FINAL PROTECTIVE FINISH

ORIGINAL ISSUE DATE
DWN JWH DATE 4/13/92
CHKD DATE
APPD DATE
SUBMITTED
CLIENT C.E. INC.

HEALY SYSTEM PIPING

SCALE ~ NO REQ'D

HEALY SYSTEMS, INC.
17 Hampshire Drive
Hudson, New Hampshire 03051

DWG NO C 9000-928
CODE SHEET 1 OF 2