State of California

AIR RESOURCES BOARD

Executive Order G-70-9-A

Relating to Modification of the Certification of the "Teed" Vapor Recovery System for Existing Underground Storage Tank Facilities with Throughputs less than 9,000 Gallons per Month

Pursuant to the authority vested in the Air Resources Board by Health and Safety Code Section 41954; and

Pursuant to the authority vested in the undersigned by Health and Safety Code Sections 39515 and 39516;

IT IS ORDERED AND RESOLVED: That, except as provided below, the "teed" vapor recovery system, with or without a pressure-vacuum valve, is hereby certified for use on existing underground gasoline storage tank facilities with throughputs of less than 9,000 gallons per month. The system certified hereby is shown in Exhibit 1 attached.

IT IS FURTHER ORDERED AND RESOLVED: That, any existing underground storage tank equipped with this system and filled by a gasoline delivery tank equipped with pressure-differential activated vapor-return vent valves must have a pressure-vacuum relief valve on the vent of the underground storage tank.

IT IS FURTHER ORDERED AND RESOLVED: That compliance with the applicable certification requirements and rules and regulations of the Division of Measurement Standards, the State Fire Marshal's Office, and the Division of Industrial Safety is made a condition of this certification.

IT IS FURTHER ORDERED AND RESOLVED: That the system certified hereby shall perform in actual use with the same effectiveness a the certification test system. Compliance with this criterion shall be a condition of this certification; and if not met, shall constitute grounds for revocation, suspension or modification of this certification.

IT IS FURTHER ORDERED AND RESOLVED: That any alteration in the equipment parts, design or operation of the system certified hereby is prohibited and deemed inconsistent with this certification, unless the alteration has been approved by the undersigned.

Executed at Sacramento, California this 18th day of Nov., 1977.

William H. Lewis, Jr.
Executive Officer

EXHIBIT-1

EXECUTIVE ORDER G-70-9-A

'TEED' GASOLINE VAPOR RECOVERY SYSTEM

FOR EXISTING UNDERGROUND STORAGE TANK

Facilities With Throughputs Less than 9,000 Gallons per Month

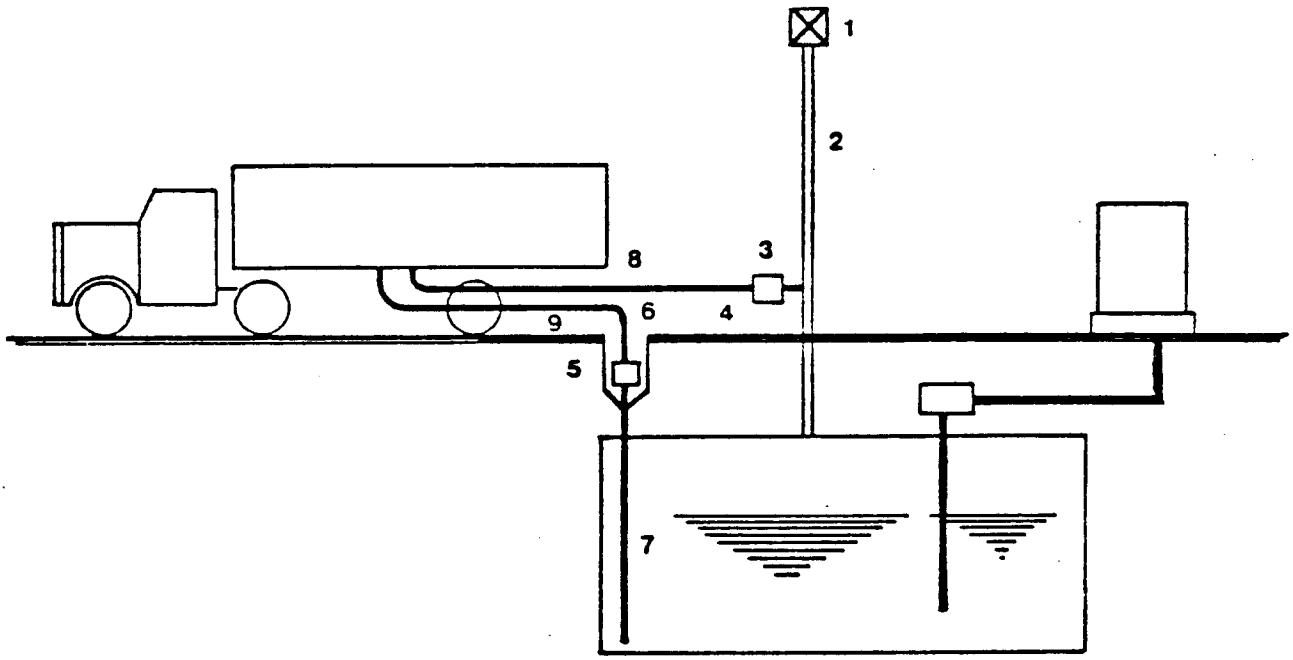

PARTS LIST *

(1) P/V VALVE (OPTIONAL).

(2) VENT PIPE 1-1/4 INCH DIAMETER OR LARGER.

(3) OPW 1611-AV 3" DRY BREAK WITH AN OPW 1711T OR OPW 1711TK LOCKING CAP.

(4) OPW 1711-V3" ELBOW.

(5) OPW 61AS ADAPTOR OR OPW 633T ADAPTOR.

(6) OPW60 ELBOW OR OPW60T ELBOW.

(7) ALUMINUM DROP TUBE (EXTEND TO WITHIN 6" BOTTOM OF TANK) 4" DIAMETER OR SMALLER.

(8) VAPOR RETURN HOSE 2" DIAMETER OR LARGER.

(9) TRUCK PRODUCT HOSE 3" DIAMETER OR SMALLER.

* Interchangeable fittings, dust caps, and p/v valves are given in Executive Order G-70-2-C.