State of California

AIR RESOURCES BOARD

EXECUTIVE ORDER G-70-5

Relating to the Certification of the Parker Coaxial Vapor Recovery System for Underground Storage Tanks at Gasoline Service Stations

Pursuant to the authority vested in the Air Resources Board by Health and Safety Code Section 39068.6 (as added by Chapter 1042, Statues of 1975); and

Pursuant to the authority vested in the undersigned by Health and Safety Code Sections 39515 and 39516;

IT IS ORDERED AND RESOLVED: That, except as provided below, the Parker Hannifin Corporation, Parker Coaxial, vapor recovery system, with or without a pressure-vacuum valve, is hereby certified for use on underground gasoline storage tanks at service stations. The system certified hereby is shown in Exhibit 1, attached.

IT IS FURTHER ORDERED AND RESOLVED: That use of the pressure-vacuum valve be subject to approval of the local fire chief, and that the tanks and piping be in compliance with the appropriate General Industry Safety Orders and in particular the provisions in Articles 144, 145 and 146 thereof.

Executed at Sacramento, California, this 7th day of October, 1976.

William H. Lewis, Jr.
Executive Officer

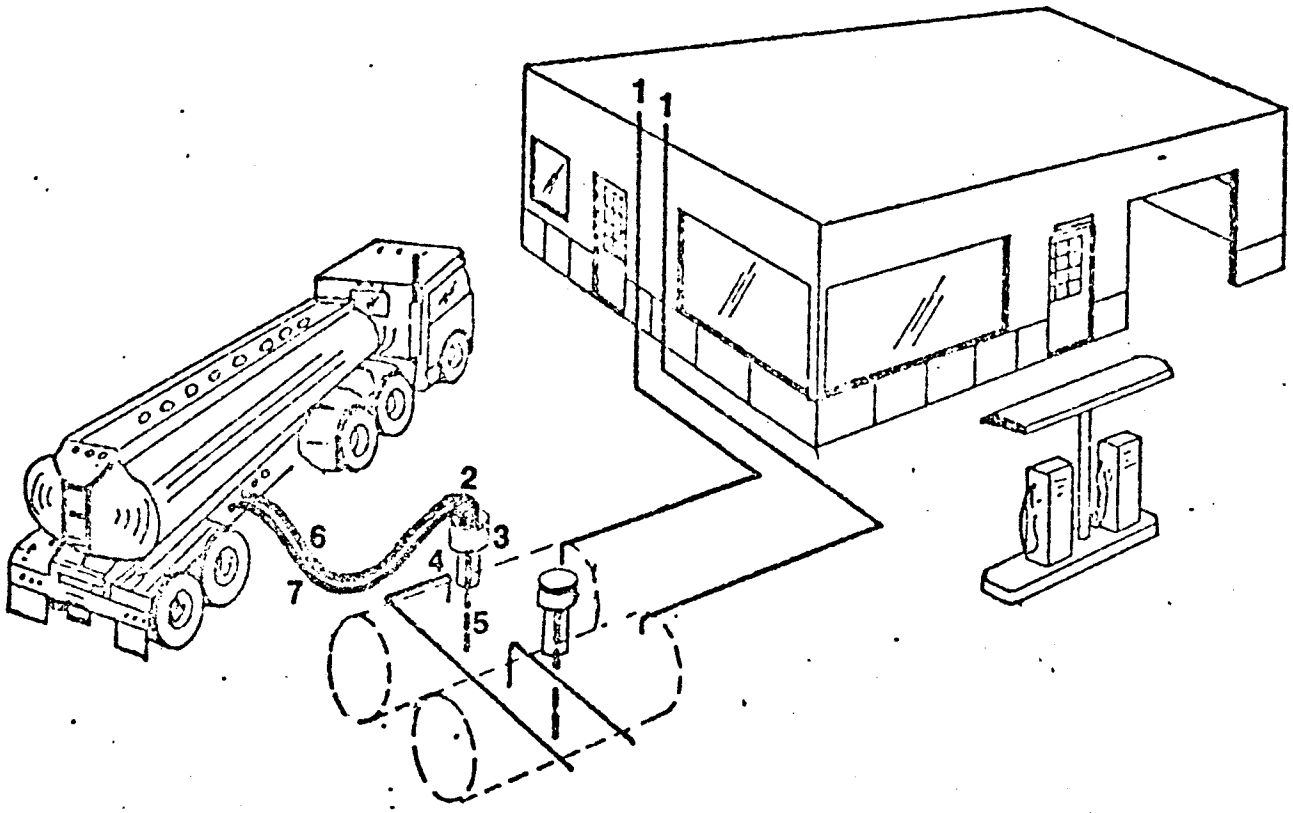

PARTS LIST

(1) 2" OPEN VENT PIPE

(2) PARKER F219 COAXIAL DELIVERY ELBOW

(3) PARKER F434 COAXIAL FILL ADAPTER

(4) 6" FILL RISER

(5) 4" ALUMINUM DROP TUBE (EXTENDED TO WITHIN 6" OF THE BOTTOM OF THE TANK)

(6) 3" VAPOR RETURN HOSE

(7) 4" PRODUCT HOSE

Note: Vent pipes may be manifolded.

EXHIBIT I

PARKER COAXIAL PHASE I

VAPOR RECOVERY SYSTEM

State of California

AIR RESOURCES BOARD

Executive Order G-70-6

Relating to the Certification of the OPW System Y Type 2, Vapor Recovery System for Underground Storage Tanks at Gasoline Service Stations

Pursuant to the authority vested in the Air Resources Board by Health and Safety Code Section 41954; and

Pursuant to the authority vested in the undersigned by Health and Safety Code Sections 39515 and 39516;

IT IS ORDERED AND RESOLVED: that, except as provided below, the Dover Corporation, OPW Division, System Y, Type 2, vapor recovery system, with or without a pressure-vacuum valve, is hereby certified for use on underground gasoline storage tanks at service stations. The system certified hereby is shown in Exhibit I, attached.

IT IS FURTHER ORDERED AND RESOLVED: that use of the pressure-vacuum valve be subject to approval of the local fire chief, and that the tanks and piping be in compliance with the appropriate General Industry Safety Orders and in particular the provisions in Articles 144, 145, and 146 thereof.

Executed at Sacramento, California, this 26th day of April 1977.

William H. Lewis, Jr.
Executive Officer

EXHIBIT 1

OPW SYSTEM Y TYPE 2
VAPOR RECOVERY SYSTEM

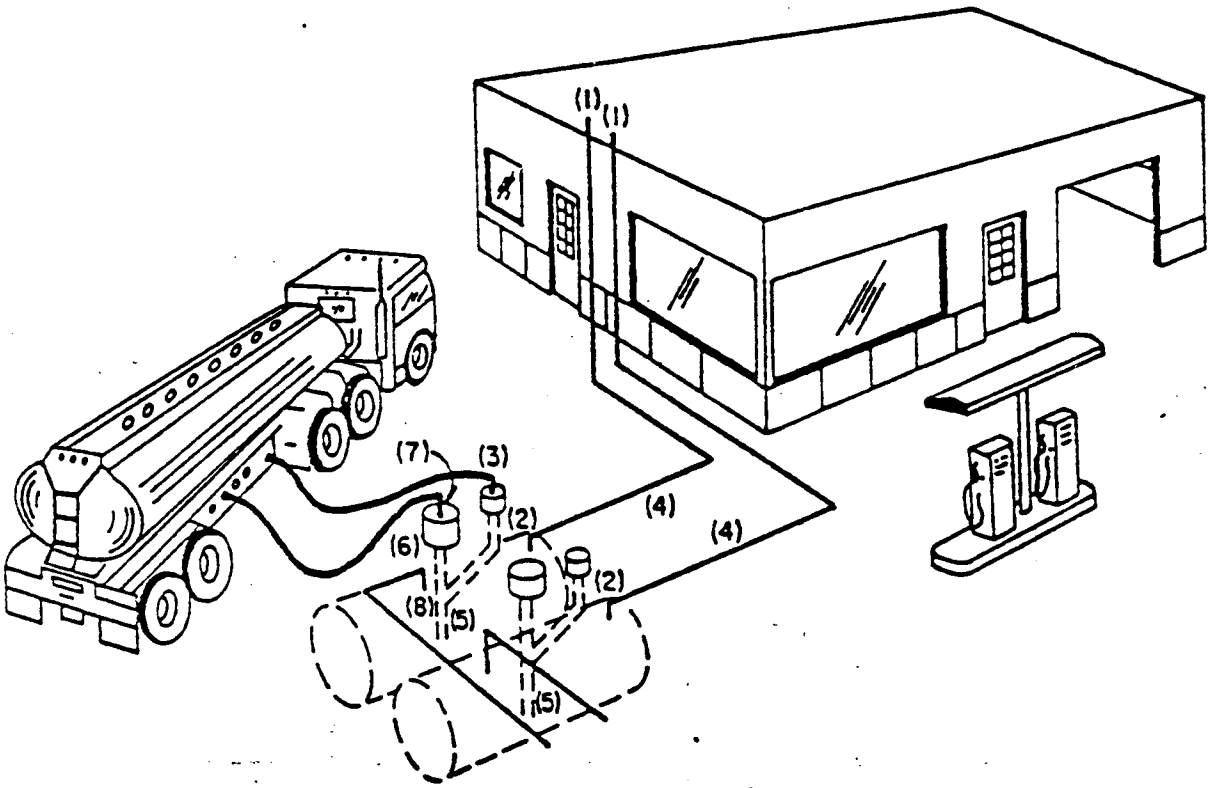

PARTS LIST (Note 1)

(1) P/V Valve (optional). (Note 1 & 2).

(2) OPW 1611 - AV 3" Dry break with an OPW 1711T or OPW 1711TK Locking cap.

(3) OPW 1711-V3" Elbow.

(4) 2" Vent pipe.

(5) *OPW 61-TD* Aluminum drop tube (extend to within 6" bottom of tank).

(6) OPW 61AS Adapter or OPW 633T Adapter.

(7) OPW 60 Elbow or OPW 60T Elbow.

(8) *OPW 318-VM Y-Type Fitting.*

Notes:

1. Interchangeable fittings, dust caps, and P/V valves are given in Executive Order G-70-2-B.

2. Vent pipes may be manifolded.

Corrected 7/6/77